FY25-ENG-53 Addendum 1

Reim Construction

Reim Construction

Supplier Response

Event Information

Number:	FY25-ENG-53 Addendum 1
Title:	West Laredo Multi-modal Trade Corridor - Phase II (Flecha/Las Cruces Realignment Project)
Type:	Invitation For Bid
Issue Date:	8/3/2025
Deadline:	8/29/2025 10:00 AM (CT)
Notes:	Bidders are strongly encouraged to submit their Request for Bid electronically through the use of Cit-E-Bid or in person - hand delivery. Bids without the required check or original bond will NOT be considered. Mailed responses (i.e. USPS, FedEx, UPS), telegraphic, email or facsimile responses will NOT be considered. Copies of the construction plans and specifications may be viewed and/or downloaded free of charge from the City of Laredo website at: https://www.cityoflaredo.com/ https://cityoflaredo.ionwave.net/

Construction Companies are strongly encouraged to submit their Request for Bid electronically through the use of Cit-E-Bid and you must register as a supplier/consultant prior to submitting. If bidder needs to hand-deliver sealed Request For Bid, please follow the steps below:

MANUAL REQUEST FOR BID DROP OFF-PROCEDURES

Note: Manual Bids will be accepted up to the first 45 minutes of the hour before they are due. For example, if bid is due at 4:00 P.M., bids will be accepted up to 3:45 P.M. of the date due.

1. Please make sure that the bid is in a sealed envelope marked with the following:

• Request for Bid Title
• Name of Company submitting Bid
• Address of Company submitting Bid
• Phone number of Company submitting Bid

2. Please notify security officer that you are there to drop off an Request for Bid with the City Secretary's office. The security officer will notify the City Secretary's office and one of our staff members will go downstairs to receive the package.

3. All persons should wait outside until we pick the envelope up, go back up to the 3rd floor to time-stamp the envelope, make a copy of it and bring it back to you. **(We highly recommend persons to wait to receive a copy of the time-stamped envelope.)**

Thank you for your understanding and help at this time of trying to stay healthy and safe.

Reim Construction Information

Contact: Yadira Garcia
Address: 9612 Stewart Rd.
Mission, TX 78573
Phone: (956) 580-2675
Fax: (956) 580-4032
Email: yadirag@reimconstruction.com

By submitting your response, you certify that you are authorized to represent and bind your company.

Miguel A Ramos
Signature

miguelr@reimconstruction.com
Email

Submitted at 8/29/2025 09:21:23 AM (CT)

Requested Attachments

39.0 TAB A - COMPANY INFORMATION QUESTIONNAIRE A.pdf

This form shall be submitted by all firm(s) or entity(ies) seeking a contract with the City of Laredo.

40.0 TAB B - Conflict of Interest Disclosure B.pdf

This form shall be submitted by all firm(s) or entity(ies) seeking a contract with the City of Laredo.

41.0 Tab C - Non-Collusive Affidavit C.pdf

This form shall be submitted by all firm(s) or entity(ies) seeking a contract with the City of Laredo.

42.0 Tab D - Discretionary Contracts Disclosure D.pdf

This form shall be submitted by all firm(s) or entity(ies) seeking a contract with the City of Laredo.

43.0 Tab E - Certificate of Interested Parties (Form 1295) E.pdf

Form 1295 must be submitted to the Texas Ethics Commission within ten (10) days upon receiving notice of award of contract. This form must be submitted within the allotted time otherwise this may result in the cancellation of the contract.

359700 West Laredo Multi_Project Manual_08.01.25 359700 West Laredo Multi_Project Manual_08.01.25.pdf

Bidders shall review and include all required documents as part of the bid package.

359700 LasCruces_100__08.01.25 359700 LasCruces_100__08.01.25.pdf

Bidders shall review and be familiar with the complete set of construction documents for this project.

Bid Bond BB.pdf

For Bidders electing to submit Bids and Bid Guaranties electronically via Cit-E-Bid, Guaranties will be verified by the Owner prior to bid certification and electronic copies of Bid Guaranties will not be returned to bidders.

Addendum No. 1 - Las Cruces Ad.pdf

Bidders shall review and acknowledge Addendum No. 1.

Bid Attributes

1	**1.0 GENERAL TERMS AND CONDITIONS FOR REQUEST FOR BID** Interested Respondents or Bidders are required to submit a Request for Bid (RFB)upon the following expressed conditions: (a) Bidders shall thoroughly examine the specifications, schedule instructions and other contract documents. Once the award has been made, failure to read all specifications, instructions, and the contract documents of the City of Laredo shall not be cause to alter the original contract or for a bidder to request additional compensation. (b)Bidders shall make all investigations necessary to thoroughly inform themselves regarding the services being requested. No pleas of ignorance by the bidder of conditions that exist or that may hereafter exist as a result of failure or omission on the part of the bidder to make the necessary examinations and investigations, or failure to fulfill in every detail the requirements of the contract documents will be accepted as a basis for varying the requirements of the City or the compensation to the bidder. (c)Bidders shall familiarize themselves with conditions relating to the scope, specifications, and restrictions regarding the execution of work to be performed under the contract. It is the bidder's responsibility to obtain any additional information it deems necessary to submit in its RFB, as well as in the performance of the contract. (d)Bidders are advised that City contracts are subject to all legal requirements provided for in the City Charter and/or applicable City Ordinances, State and Federal Statutes. (e)The City of Laredo reserves the right to reject any RFB (submittals). (f)The City of Laredo will not reimburse any firm for any costs involved in the preparation and submission of an RFB, amendments or other relevant documents associated with the RFB. ☑ I have read and understand this section.
2	**2.0 PREPARATION OF SUBMITTALS** Submittals shall be prepared in accordance with the following: (a)**Bidders are strongly encouraged to submit their proposals electronically through the use of the City of Laredo's electronic procurement system: *Cit-E-Bid***, or in-person – hand-delivered to the City Secretary's office, City Hall, 1110 Houston Street (3rd Floor), Laredo, Texas 78040.Mailed bids (i.e. USPS, FedEx, UPS), telegraphic, or facsimile submittals **will not** be allowed/considered. (b)If hand-delivered, all information required by the Request For Bid shall be furnished. The bidder shall print or type the business name and manually sign the schedule. (c)Alternate Proposals will not be considered unless authorized by the invitation for submittals or any applicable addendum. ☑ I have read and understand this section.
3	**3.0 SUBMISSION OF BIDS** (a) Request for Bid (RFB) and changes thereto shall be enclosed in sealed envelopes, properly addressed and to include the date and hour of the opening. (b) Unless otherwise noted on the Notice to Bidders cover sheet, all hand delivered bids must be submitted to the City Secretary's office, City Hall, 1110 Houston Street (3rd Floor), Laredo, Texas, 78040. (c) RFB forms can be downloaded and printed through Cit-E-Bid. Mailed bids (i.e. USPS, FedEx, UPS), telegraphic, or facsimile submittals **will not** be allowed/considered. (d) The City shall pay no costs or other amounts incurred by any entity in responding to this RFB, or as a result of issuance of this RFB. ☑ I have read and understand this section.
4	**4.0 REJECTION OF REQUEST FOR BID** The City may reject a Request For Bid (RFB) if: (a) Bidder misstates or conceals any material fact in the RFB. (b) RFB does not strictly conform to the law or the requirements of the RFB. (c) Bidder is delinquent in the payment of taxes, including state and local, City of Laredo taxes; a bidder is considered delinquent, regardless of any contract or agreed judgments to pay such delinquent taxes. (d) No RFB submitted herein shall be considered unless the bidder warrants that, upon execution of a contract with the City of Laredo, bidder will not engage in employment practices such as discriminating against employees because of race, color, sex, creed, or national origin. The bidder will submit such reports as the City may, therefore, require assuring compliance with said practices. (e) The City may reject all RFB's or any part of an RFB whenever it is deemed necessary. ☑ I have read and understand this section.
5	**5.0 WITHDRAWAL OF REQUEST OF BID** Bids or proposals may not be withdrawn after they have been opened unless approved by the City Council. ☑ I have read and understand this section.

6	**6.0 LATE SUBMITTALS OR MODIFICATIONS** RFB's and modifications received after the time set for the bid or proposal receiving deadline will **not** be considered. Late bids or submittals shall be returned to the bidder or vendor unopened. ☑ I have read and understand this section.

7	**7.0 CLARIFICATIONS OR OBJECTION TO REQUEST FOR BID (RFB/Submittal)** If any person contemplating submitting an RFB for this contract is in doubt as to the true meaning of the specifications, or other RFB documents or any part thereof, they may submit to the City Purchasing Agent or City Engineer. All requests for information shall be made in writing through email or Question & Response section on Cit-E-Bid system no later than the Question Deadline date to: CITY OF LAREDO PURCHASING AGENT - 5512 Thomas Avenue Laredo, TX 78041; and/or CITY ENGINEER Ramon E. Chavez, P.E., 1110 Houston St., Laredo, TX 78040; email: rchavez@ci.laredo.tx.us. Any bidder submitting questions shall make reference to a specific RFB number, section, page and item of this solicitation. Questions untimely submitted may not elicit a response. It is the bidder's responsibility to follow up and make certain that the request was received. In case there are changes, additions, and/or edits to the original scope, an addendum will be issued by the Purchasing Agent or City Engineer to all vendors through Cit-E-Bid system under Questions and Responses section to clarify any inquiries. The City will not be responsible for any other interpretations of the RFB during the RFB process, bidder, or any persons acting on their behalf, shall not contact any City official or employee staff except those specifically designated in this or another subsequent solicitation document. **PROTEST** The following sequence of activities must take palace in filing a protest: (a) To be performed by protesting Respondent: Within ten (10) calendar days prior to the time that the City Council considers the recommendation of the City's evaluation committee, the protesting Respondent must provide written protest to the City Purchasing Officer. Such protest must include specific reasons for the protest. (b) To be performed by City's Purchasing Officer: Shall review the records of procurement and determine legitimacy and procedural correctness. With five (5) working days, the City Purchasing Officer shall provide written response to the protesting Respondent of the decision. (c) If the protesting Respondent is not satisfied with the decision of the City Purchasing Officer, such protesting Respondent may appeal to the City Manager of the City of Laredo. If the protesting Respondent cannot resolve the issue with the City Manager, he shall be entitled to address his concerns when the City Council of the City of Laredo considers the awarding of the contract. Such appeal may be made only after exhausting all administrative procedures through the City Manager. (d) All protests must be duly submitted via Certified Mail to: City of Laredo - Purchasing Agent 5512 Thomas Ave. Laredo, Texas 78041. The respondents must agree to maintain current, updated disclosure of information on file with the City's Purchasing Office throughout the term of the contract. Respondents doing business with the City of Laredo shall comply with all applicable provisions of the City of Laredo's Code of Ethics. **Ordinance No. 2012-0-126 (as amended).** The City will require any and all Respondents to submit a **Non-Collusive Affidavit (Form C)**. The Respondent will be required to state that the party submitting a proposal or bid, that such proposal or bid is genuine and not collusive or sham; that said Respondent/Bidder has not colluded, conspired, connived or agreed, directly or indirectly, with any Respondent/Bidder or Person, to put in a sham bid or to refrain from bidding, and has not in any manner, directly or indirectly, sought by agreement or collusion, or communication or conference, with any person, to fix the bid price or affiant or of any other Respondent/Bidder, or to fix any overhead, profit or cost element of said bid price, or of that of any other Respondent/Bidder, or to secure any advantage against the City of Laredo or any person interested in the proposed contract; and that all statements in said proposal or bid are true. The City will require several forms to be submitted as part of their bids; these required forms are listed on section **20.0 Checklist (required forms).** ☑ I have read and understand this section.

8	**8.0 AWARD OF CONTRACT** The selection and award shall be based on the basis of being the lowest responsive responsible bidder, demonstrated competence and qualifications to perform the services. The bidder or vendor shall bear the burden of proof of compliance with the City of Laredo Engineering Department specifications. ☑ I have read and understand this section.

9	**9.0 PAYMENTS & INVOICING** All invoices to the City of Laredo have a 30-day term from receipt of completion of services. All invoices shall be mailed to the **Engineering Department, 1110 Houston St., City Hall (2nd Floor), Laredo, Texas 78040**. Electronic Funds Transfer (EFT) payments are also available; if electronic payments are preferred, an Electronic Funds Transfer (EFT) Authorization form needs to be completed and returned via e-mail to **jjolly@ci.laredo.tx.us**. For more information, please contact **Mr. Jorge Jolly, Accounts Payable Manager at (956) 791-7328**. ☑ I have read and understand this section.
10	**10.0 CONTRACT REQUIREMENTS** **(a) CODE OF ETHICS** - Consultants, firms, contractor or vendors doing business with the City of Laredo shall comply with all provisions of the City of Laredo's Code of Ethics (Ordinance 2012-O-126 as amended) Consultants, firms, contractor or vendors may be required to participate in Code of Ethics training. **(b) PROHIBITED CONTACTS DURING CONTRACT SOLICITATION PERIOD** - A person or entity who seeks or applies for a city contract or any other person acting on behalf of such person or entity is prohibited from contacting city officials and employees regarding such a contract after a Request for Proposal (RFP), Request for Qualification (RFQ) or other solicitation has been released. This no-contact provision shall conclude when the contract is awarded. If contact is required, such contact will be done in accordance with procedures incorporated into the solicitation document. Violation of this provision by respondents or their agents may lead to disqualification of their offer from consideration. **(c) COMPANY INFORMATION QUESTIONNAIRE (Form Attached: Section 39.0-Tab A)** - This form shall be submitted by all firms(s) or entity(ies) seeking a contract with the City of Laredo. **(d) CONFLICT OF INTEREST DISCLOSURE (Form Attached: Section 40.0-Tab B)** - This form shall be submitted by all firms(s) or entity(ies) seeking a contract with the City of Laredo. **(e) NON-COLLUSIVE AFFIDAVIT (Form Attached: Section 41.0-Tab C)** - The City of Laredo requires consultants, firms, contractors, and vendors to submit a Non-Collusive Affidavit. Consultants, firms, contractors, or vendors will be required to state that the party submitting a SOQ, proposal or bid, that such SOQ, proposal or bid is genuine and not collusive or sham; that said respondent or bidder has not colluded, conspired, connived or agreed, directly or indirectly, with any respondent or bidder or person, to put in a sham bid or to refrain from bidding, and has not in any manner, directly or indirectly, sought by agreement or collusion, or communication or conference, with any person, to fix the bid price or affiant or of any other respondent or bidder, or to fix any overhead, profit or cost element of said bid price, or of that of any other respondent or bidder, or to secure any advantage against the City of Laredo or any person interested in the proposed contract; and that all statements in said response, proposal or bid are true. **(f) DISCRETIONARY CONTRACTS DISCLOSURE (Form Attached: Section 42.0-Tab D)** This form shall be submitted by all firms(s) or entity(ies) seeking a contract with the City of Laredo. **(g) CERTIFICATE OF INTERESTED PARTIES (Form 1295) (Form Attached: Section 43.0-Tab E)** Implementation of House Bill 1295: In an effort to comply with state law the certificate of interested parties must be filled out once a vendor has been granted a contract. All of this information can be found on the state of Texas website, please use this link provided, https://www.ethics.state.tx.us/filinginfo/1295/. In 2015, the Texas Legislature adopted House Bill 1295, which added section 2252.908 of the Government Code. The law states that a governmental entity or state agency may not enter into certain contracts with a business entity unless the business entity submits a disclosure of interested parties to the governmental entity or state agency at the time the business entity submits the signed contract to the governmental entity or state agency. The law applies only to a contract of a governmental entity or state agency that either (1) requires an action or vote by the governing body of the entity or agency before the contract may be signed or (2) has a value of at least $1 million. The disclosure requirement applies to a contract entered into on or after January 1, 2016. In order to comply with state law the Certificate of Interested Parties (Form 1295) must be submitted to the Texas Ethics Commission within 10 days upon receiving notice of award of contract. This form must be submitted within the allotted time otherwise this may result in the cancellation of the contract. **(h) TITLE VI ASSURANCE** The Engineering Department for the City of Laredo along with the Texas Department of Transportation, in accordance with the provisions of Title VI of the Civil Rights Act of 1964 (78 Stat. 252, 42 U.S. C. ss 2000d to 2000d-4) and the Regulations, hereby notifies all providers that it will affirmatively insure that any contract entered into pursuant to this advertisement, disadvantaged business enterprises will be afforded full and fair opportunity to submit Statements of Qualifications in response to this invitation and will not be discriminated against on the grounds of race, color, or national origin in consideration for an award. **(i) INSURANCE REQUIREMENTS** When required and specified in the City of Laredo bid specifications, the successful bidder(s) shall furnish the City with Certificate of Insurance herein required upon execution of the contract and shall maintain said policies in full

force and effect at all times during the term of this contract.
(a) Commercial General Liability insurance at minimum combined single limits of $1,000,000 per-occurrence and $2,000,000 general aggregate for bodily injury and property damage, which coverage shall include products/completed operations ($1,000,000 products/ completed operations aggregate), and XCU (Explosion, Collapse, Underground) hazards. Coverage for products/completed operations must be maintained for at least two (2) years after the construction work has been completed. Coverage must be amended to provide for an each-project aggregate limit of insurance. An alternative would be to have separate limits for all lines of General Liability coverage for each project.
(b) Workers Compensation insurance at statutory limits, including Employers Liability coverage a minimum limit of $1,000,000 each-occurrence each accident/$1,000,000 by disease each-occurrence/$1,000,000 by disease aggregate.
(c) Commercial Automobile Liability insurance at minimum combined single limits of $1,000,000 per-occurrence for bodily injury and property damage, including owned, non-owned, and hired car coverage.
(d) Any Subcontractor(s) hired by the Contractor shall maintain insurance coverage equal to that required of the Contractor. It is the responsibility of the Contractor to assure compliance with this provision. The City of Laredo accepts no responsibility arising from the conduct, or lack of conduct, of the Subcontractor. The independent subcontractor performing onsite labor will extend completed operations to additional insured parties.
(e) A Comprehensive General Liability insurance form may be used in lieu of a Commercial General Liability insurance form. In this event, coverage must be written on an occurrence basis, at limits of $1,000,000 each-occurrence, combined single limit, and coverage must include a broad form Comprehensive General Liability Endorsement, products/completed operations, XCU hazards, and contractual liability.
(f) With reference to the foregoing insurance requirement, Contractor shall specifically endorse applicable insurance policies as follows:
1. The City of Laredo shall be named as a primary and non-contributory additional insured with respect to General Liability and Automobile Liability. The additional insured for General Liability shall include operations and completed operations. Completed operation are to be kept in force for a period of 10 years.
2. All liability policies shall contain no cross-liability exclusions or insured versus insured restrictions.
3. A waiver of subrogation in favor of the City of Laredo shall be contained in the Workers compensation, Builders Risk, and all liability policies.
4. All insurance policies shall be endorsed to require the insurer to immediately notify The City of Laredo of any material change in the insurance coverage.
5. All insurance policies shall be endorsed to the effect that The City of Laredo will receive at least sixty- (60) days' notice prior to cancellation or non-renewal of the insurance.
6. All insurance policies, which name The City of Laredo as an additional insured, must be endorsed to read as primary coverage regardless of the application of other insurance.
7. Required limits may be satisfied by any combination of primary and umbrella liability insurances.
8. Contractor may maintain reasonable and customary deductibles, subject to approval by The City of Laredo.
9. Insurance must be purchased from insurers that are financially acceptable to the City of Laredo. Insurer must be rated A- or greater by AM Best Rating with an admitted carrier licensed by the Texas Department of Insurance.
(g) All insurance must be written on forms filed with and approved by the Texas Department of Insurance. Certificates of Insurance shall be prepared and executed by the insurance company or its authorized agent and shall contain provisions representing and warranting the following:
1. Sets forth all endorsements and insurance coverages according to requirements and instructions contained herein.
2. Certificates of insurance shall be accompanied by a copy of each required endorsement including the notice of cancellation or termination provisions to the City of Laredo for each required type of insurance.
(h) Upon receipt of a verified claim and at the request of the City of Laredo, Contractor shall furnish The City of Laredo with certified copies of all required insurance policies.

☑ I have read and understand this section.

11

11.0 SCOPE OF WORK

This project consists of realigning approximately 916.27 LF of roadway from Las Cruces to FM 1472 (Mines Rd) including Obliterating Abandon Roadway, D-GR HMA TY-B, D-GR HMA TY-C, Concrete Box Culvert, concrete sidewalks, Concrete Curb, Metal Beam Guard Fence, ADA ramps, traffic signals, etc.

☑ I have read and understand this section.

12	**12.0 BID OR PROPOSAL PREPARATION COST** The City of Laredo will not reimburse any proposer for any costs involved in the preparation and submission of bids, proposals, amendments or other relevant documents associated with the RFB. ☑ I have read and understand this section.
13	**13.0 TERM OF AGREEMENT** Construction contract time for the project is one hundred seventy-four (174) working days. ☑ I have read and understand this section.
14	**14.0 GENERAL CONDITIONS** Interested bidders shall familiarize themselves with conditions relating to the scope, specifications, and restrictions regarding the execution of work to be performed under the contract. It is the bidder's responsibility to obtain any additional information it deems necessary to submit in its RFB proposal, as well as in the performance of the contract. Information contained in this document should not be considered all-inclusive. All questions or clarification regarding this RFB proposal request must be submitted to in writing to the City of Laredo Engineering and/or Purchasing Department on or before question deadline scheduled. All questions shall be made in writing, and the person submitting the request will be responsible for its prompt delivery. City of Laredo Engineering Department 1110 Houston St. Laredo, Texas 78040 (956) 791-7346 Each question, along with the City's response will be provided in writing to all prospective bidders and included as an addendum to the RFB document. Any verbal communication regarding this request for qualifications will be considered non-binding on either party. ☑ I have read and understand this section.
15	**15.0 ADDITIONAL DISCUSSIONS** **When determining the need for additional discussions following bid submission and evaluation,** the City will determine based upon State procedures and the size and complexity of a project, the need for additional discussions following bid submission and evaluation. ☑ I have read and understand this section.
16	**16.0 TENTATIVE SCHEDULE FOR PROJECT AWARD** 1st Advertisement date: August 3, 2025 2nd Advertisement date: August 10, 2025 Pre-Bid Conference: August 13, 2025 Questions Deadline: August 18, 2025 Bid Due Date: August 29, 2025 Anticipated City Council Award: October 2025 ***Footnote: The City of Laredo reserves the right to adjust time and dates on above projected schedule if it's in the best interest of the City of Laredo. Contract awards will be awarded upon funding availability.*** ☑ I have read and understand this section.
17	**17.0 SPECIAL ACCOMMODATIONS** To request special accommodations pursuant to the Americans with Disabilities Act (ADA), please notify the contact shown below, a minimum of 48 hours prior to a scheduled meeting. Please e-mail: Lorena Lopez-Mata at lllopez@ci.laredo.tx.us using the standard subject line: Special Accommodations, **"FY25-ENG-53 West Laredo Multi-modal Trade Corridor - Phase II (Flecha/Las Cruces Realignment Project"** To request special accommodations pursuant to the Language Assistance Plan (LAP), for those with limited English proficiency who need the RFB or other information translated into another language please notify the contact shown below. Please e-mail: Lorena Lopez-Mata at lllopez@ci.laredo.tx.us using the standard subject line: Language Assistance Request, **"FY25-ENG-53 West Laredo Multi-modal Trade Corridor - Phase II (Flecha/Las Cruces Realignment Project".** ☑ I have read and understand this section.

18	**18.0 DISQUALIFICATION AND DEBARMENT CERTIFICATION** By submitting this Request for Bid, the bidder certifies that it is not currently debarred or eligible for debarment from the City of Laredo pursuant to **Ordinance No. 2017-O-098** and that it is not an agent of a person or entity that is currently debarred from receiving contracts from any political subdivision or agency of the State of Texas. The contract parties are prohibited from making any award at any tier to any party that is debarred or suspended or otherwise excluded from or ineligible for participation in Federal Assistance Programs under Executive Order 12549, “Debarment and Suspension.” By executing this agreement, the bidder certifies that it is not currently debarred, suspended, or otherwise excluded from or ineligible for participation in Federal Assistance Programs under Executive Order 12549. The parties to this contract shall require any party to a subcontract or purchase order awarded under this contract to certify its eligibility to receive Federal funds and, when requested by the City, to furnish a copy of the certification. ☑ I have read and understand this section.
19	**19.0 DISPOSITION OF SUBMITTALS / TEXAS PUBLIC INFORMATION ACT ADHERENCE** All bids or submittals and/or any portions thereof become the property of City upon receipt and will not be returned. Any information deemed to be confidential by bidder should be clearly noted on the page(s) where confidential information is contained. However, City cannot guarantee that it will not be compelled to disclose all or part of any public record under the Texas Public Information Act, since information deemed to be confidential by bidder may not be considered confidential under Texas law, or pursuant to a court order. The City of Laredo, by Records Management Ordinance No. 91-O-19, manages records from their creation to their ultimate disposition, consistent with the Texas Local Government Records Act and accepted records management practice; the City also follows the records retention guidelines set out by the Texas State Library and Archives Commission (TSLAC). ☑ I have read and understand this section.
20	**20.0 REQUIRED FORMS AND CONTENTS OF RFB SUBMISSION** For an RFB to be considered it must contain the following information: **CHECKLIST** **39.0 Tab A - Company Information Questionnaire** **40.0 Tab B - Conflict of Interest Disclosure** **41.0 Tab C - Non-Collusive Affidavit** **42.0 Tab D - Discretionary Contracts Disclosure** **43.0 Tab E - Certificate of Interested Parties (Form 1295)** **Request for Bid Response** **Bid Bond (Electronic)** **Addendum No. 1** **Bids without the required check or original bond will NOT be considered.** ☑ I have read and understand this section.
21	**21.0 ADDENDUMS** The City of Laredo reserves the right to issue addenda to solicitations as necessary. Addenda are used to clarify, revise, or otherwise modify solicitation documents. All submitting parties are responsible for acknowledging receipt of each addendum issued. Failure to acknowledge any issued addendum will result in the submission being returned and considered incomplete. **Important Notice:** Addendum notifications will be sent to the email address associated with each submission. It is the submitting party’s responsibility to monitor the provided email address and ensure that all addenda are received and acknowledged. Failure to acknowledge any issued addendum will result in the submission being returned and considered incomplete. ☑ I have read and understand this section.

Bid Lines

1

Package Header

BASE BID

Quantity: 1 UOM: EA Total: $4,457,592.74

Package Items

1.1 PREPARING ROW

Quantity: 9 UOM: STA Price: $15,000.00 Total: $135,000.00

1.2 REMOVING CONC (MEDIANS)

Quantity: 460 UOM: SY Price: $15.25 Total: $7,015.00

1.3 REMOVING CONC (DRIVEWAYS)

Quantity: 904 UOM: SY Price: $13.50 Total: $12,204.00

1.4 REMOVING CONC (CURB)

Quantity: 597 UOM: LF Price: $7.25 Total: $4,328.25

1.5 OBLITERATING ABANDONED ROAD

Quantity: 2425 UOM: SY Price: $6.85 Total: $16,611.25

1.6 EXCAVATION (ROADWAY)

Quantity: 483 UOM: CY Price: $4.40 Total: $2,125.20

1.7 EXCAVATION (CHANNEL)

Quantity: 2661 UOM: CY Price: $10.00 Total: $26,610.00

1.8 EMBANK (FNL)(DC)(TY A)

Quantity: 3983 UOM: CY Price: $19.00 Total: $75,677.00

1.9 HYDRO MULCH SEED (TEMP_WARM)

Quantity: 611 UOM: SY Price: $4.75 Total: $2,902.25

1.10 HYDRO MULCH SEED (TEMP_COOL)

Quantity: 611 UOM: SY Price: $4.75 Total: $2,902.25

1.11 DRILL SEED (PERM_RURAL_SAND)

Quantity: 2142 UOM: SY Price: $2.50 Total: $5,355.00

1.12 VEGETATIVE WATERING

Quantity: 247 UOM: TGL Price: $31.50 Total: $7,780.50

1.13 D-GR HMA TY-B PG64-22

Quantity: 5137 UOM: TON Price: $125.00 Total: $642,125.00

1.14 D-GR HMA TY-C SAC-B PG70-22 (EXEMPT)

Quantity: 732 UOM: TON Price: $130.00 Total: $95,160.00

1.15 STRUCTURE EXCAVATION

Quantity: 4125 UOM: CY Price: $7.00 Total: $28,875.00

1.16 TRENCH EXCAVATION PROTECTION

Quantity: 699 UOM: LF Price: $3.00 Total: $2,097.00

1.17 TEMPORARY SPL SHORING

Quantity: 1460 UOM: SF Price: $41.75 Total: $60,955.00

1.18 DRILL SHAFT (TRF SIG POLE)(48 IN)

Quantity: 66 UOM: LF Price: $690.00 Total: $45,540.00

1.19 CL C CONC (RAIL FOUNDATION)

Quantity: 85 UOM: CY Price: $862.00 Total: $73,270.00

1.20 RIPRAP (CONC) (5 IN)

Quantity: 274 UOM: CY Price: $501.00 Total: $137,274.00

1.21 RIPRAP (MOW STRIP) (4 IN)

Quantity: 15 UOM: CY Price: $486.00 Total: $7,290.00

1.22 RIPRAP (STONE COMMON)(DRY) (18 IN)

Quantity: 35 UOM: CY Price: $385.00 Total: $13,475.00

1.23 RAIL (TY C1W)

Quantity: 469 UOM: LF Price: $482.00 Total: $226,058.00

1.24 CONC BOX CULV (10 FT X 7 FT)

Quantity: 910 UOM: LF Price: $1,380.00 Total: $1,255,800.00

1.25 RC PIPE (CL III) (24 IN)

Quantity: 300 UOM: LF Price: $79.50 Total: $23,850.00

1.26 RC PIPE (CL III) (48 IN)

Quantity: 326 UOM: LF Price: $241.00 Total: $78,566.00

1.27 JCTBOX (COMPL) (PJB) (6FTX6FT)

Quantity: 2 UOM: EA Price: $7,330.00 Total: $14,660.00

1.28 INLET (COMPL) (PCO) (3FT) (NONE)

Quantity: 1 UOM: EA Price: $4,660.00 Total: $4,660.00

1.29 INLET (COMPL) (PCO) (3FT) (BOTH)

Quantity: 2 UOM: EA Price: $6,070.00 Total: $12,140.00

1.30 INLET (COMPL) (PCO) (5FT) (NONE)

Quantity: 1 UOM: EA Price: $5,680.00 Total: $5,680.00

1.31 INLET (COMPL) (TRAFFIC) (TY X-5)

Quantity: 1 UOM: EA Price: $7,030.00 Total: $7,030.00

1.32 WINGWALL (PW - 1) (HW=10 FT)

Quantity: 1 UOM: EA Price: $60,000.00 Total: $60,000.00

1.33 WINGWALL (PW - 1) (HW=11 FT)

Quantity: 1 UOM: EA Price: $65,000.00 Total: $65,000.00

1.34 REMOV STR (HEADWALL)

Quantity: 2 UOM: EA Price: $2,410.00 Total: $4,820.00

1.35 REMOV STR (PIPE)

Quantity: 108 UOM: LF Price: $13.75 Total: $1,485.00

1.36 MOBILIZATION

Quantity: 1 UOM: LS Price: $425,000.00 Total: $425,000.00

1.37 BARRICADES, SIGNS AND TRAFFIC HANDLING

Quantity: 10 UOM: MO Price: $1,530.00 Total: $15,300.00

1.38 PORTABLE CHANGEABLE MESSAGE SIGN

Quantity: 48 UOM: DAY Price: $84.00 Total: $4,032.00

1.39 ROCK FILTER DAMS INSTALL (TY 3)

Quantity: 57 UOM: LF Price: $41.75 Total: $2,379.75

1.40 ROCK FILTER DAMS (REMOVE)

Quantity: 57 UOM: LF Price: $13.00 Total: $741.00

1.41 CONSTRUCTION EXITS (INSTALL)(TY I)

Quantity: 156 UOM: SY Price: $45.50 Total: $7,098.00

1.42 CONSTRUCTION EXITS (REMOVE)

Quantity: 156 UOM: SY Price: $9.30 Total: $1,450.80

1.43 TEMPORARY SEDIMENT CONTROL FENCE

Quantity: 751 UOM: LF Price: $4.70 Total: $3,529.70

1.44 TEMPORARY SEDIMENT CONTROL FENCE REMOVE

Quantity: 751 UOM: LF Price: $2.25 Total: $1,689.75

1.45 PORT CTB (FUR & INST)(LOW PROF) (TY 1)

Quantity: 200 UOM: LF Price: $24.50 Total: $4,900.00

1.46 PORT CTB (FUR & INST)(LOW PROF) (TY 2)

Quantity: 40 UOM: LF Price: $24.50 Total: $980.00

1.47 PORT CTB (MOVE)(LOW PROF) (TY 1)

Quantity: 400 UOM: LF Price: $7.35 Total: $2,940.00

1.48 PORT CTB (MOVE)(LOW PROF) (TY 2)

Quantity: 80 UOM: LF Price: $7.35 Total: $588.00

1.49 PORT CTB (REMOVE)(LOW PROF) (TY 1)

Quantity: 200 UOM: LF Price: $19.00 Total: $3,800.00

1.50 PORT CTB (REMOVE)(LOW PROF) (TY 2)

Quantity: 40 UOM: LF Price: $19.00 Total: $760.00

1.51 REMOVE AND RELAY PAVERS

Quantity: 153 UOM: SY Price: $108.00 Total: $16,524.00

1.52 CONC CURB (TY II)

Quantity: 420 UOM: LF Price: $17.25 Total: $7,245.00

1.53 CONC CURB & GUTTER (TY II)

Quantity: 2138 UOM: LF Price: $20.25 Total: $43,294.50

1.54 CONC CURB (TY B) MOUNTABLE

Quantity: 276 UOM: LF Price: $21.75 Total: $6,003.00

1.55 DRIVEWAYS (CONC)

Quantity: 422 UOM: SY Price: $88.50 Total: $37,347.00

1.56 DRIVEWAYS (ACP)

Quantity: 317 UOM: SY Price: $53.50 Total: $16,959.50

1.57 CONC SIDEWALKS (4")

Quantity: 1023 UOM: SY Price: $41.50 Total: $42,454.50

1.58 CURB RAMPS (TY 7)

Quantity: 3 UOM: EA Price: $1,960.00 Total: $5,880.00

1.59 MTL THRIE-BEAM GD FEN (TIM POST)

Quantity: 112.5 UOM: LF Price: $56.00 Total: $6,300.00

1.60 MTL BEAM GD FEN TRANS (THRIE-BEAM)

Quantity: 3 UOM: EA Price: $3,280.00 Total: $9,840.00

1.61 DOWNSTREAM ANCHOR TERMINAL SECTION

Quantity: 1 UOM: EA Price: $2,410.00 Total: $2,410.00

1.62 MTL BM GD FEN TRANS (NON - SYM)

Quantity: 1 UOM: EA Price: $2,160.00 Total: $2,160.00

1.63 GUARDRAIL END TREATMENT (INSTALL)

Quantity: 2 UOM: EA Price: $4,860.00 Total: $9,720.00

1.64 CRASH CUSH ATTEN (INSTL)(R)(N)(TL3)

Quantity: 1 UOM: EA Price: $30,700.00 Total: $30,700.00

1.65 CONDT (PVC) (SCH 40) (2")

Quantity: 140 UOM: LF Price: $18.25 Total: $2,555.00

1.66 CONDT (PVC) (SCH 40) (4")

Quantity: 617 UOM: LF Price: $31.50 Total: $19,435.50

1.67 CONDT (PVC) (SCH 80) (2") (BORE)

Quantity: 450 UOM: LF Price: $29.50 Total: $13,275.00

1.68 CONDT (PVC) (SCH 80) (4") (BORE)

Quantity: 620 UOM: LF Price: $45.25 Total: $28,055.00

1.69 ELECTRICAL CONDUCTOR (NO. 6) BARE

Quantity: 1450 UOM: LF Price: $3.00 Total: $4,350.00

1.70 ELECTRICAL CONDUCTOR (NO. 6) INSULATED

Quantity: 120 UOM: LF Price: $3.35 Total: $402.00

1.71 TRAY CABLE (4 CONDR) (12 AWG)

Quantity: 1040 UOM: LF Price: $3.35 Total: $3,484.00

1.72 GROUND BOX TY D (162922) W/APRON

Quantity: 3 UOM: EA Price: $1,320.00 Total: $3,960.00

1.73 ALUMINUM SIGNS (TY A)

Quantity: 6.56 UOM: SF Price: $41.50 Total: $272.24

1.74 IN SM RD SN SUP & AM TY10BWG (1) SA (P)

Quantity: 14 UOM: EA Price: $894.00 Total: $12,516.00

1.75 REMOVE SM RD SN SUP & AM

Quantity: 9 UOM: EA Price: $129.00 Total: $1,161.00

1.76 REFL PAV MRK TY I (W) 8" (DOT) (100MIL)

Quantity: 86 UOM: LF Price: $2.70 Total: $232.20

1.77 REFL PAV MRK TY I (W) 8" (SLD) (100MIL)

Quantity: 931 UOM: LF Price: $1.25 Total: $1,163.75

1.78 REFL PAV MRK TY I (W) 24" (SLD) (100MIL)

Quantity: 188 UOM: LF Price: $18.00 Total: $3,384.00

1.79 REFL PAV MRK TY I (W) (ARROW) (100MIL)

Quantity: 7 UOM: EA Price: $168.00 Total: $1,176.00

1.80 REFL PAV MRK TY I (W) (DBL ARROW) (100MIL)

Quantity: 3 UOM: EA Price: $337.00 Total: $1,011.00

1.81 REFL PAV MRK TY I (W) (WORD) (100MIL)

Quantity: 5 UOM: EA Price: $281.00 Total: $1,405.00

1.82 REFL PAV MRK TY I (Y) 24" (SLD) (100MIL)

Quantity: 153 UOM: LF Price: $20.25 Total: $3,098.25

1.83 REFL PAV MRK TY I (Y) (MED NOSE) (100MIL)

Quantity: 2 UOM: EA Price: $505.00 Total: $1,010.00

1.84 REFL PAV MRK TY I (W) 6" (SLD) (100MIL)

Quantity: 1792 UOM: LF Price: $1.00 Total: $1,792.00

1.85 REFL PAV MRK TY I (Y) 6" (BRK) (100MIL)

Quantity: 100 UOM: LF Price: $2.20 Total: $220.00

1.86 REFL PAV MRK TY I (Y) 6" (SLD) (100MIL)

Quantity: 4490 UOM: LF Price: $1.00 Total: $4,490.00

1.87 REFL PAV MRKR TY I-C

Quantity: 43 UOM: EA Price: $8.40 Total: $361.20

1.88 REFL PAV MRKR TY II-A-A

Quantity: 151 UOM: EA Price: $8.40 Total: $1,268.40

1.89 INSTALL HWY TRF SIG (ISOLATED)

Quantity: 1 UOM: EA Price: $35,900.00 Total: $35,900.00

1.90 REMOVING TRAFFIC SIGNALS

Quantity: 1 UOM: EA Price: $8,530.00 Total: $8,530.00

1.91 TEMP TRAF SIGNALS

Quantity: 1 UOM: EA Price: $96,400.00 Total: $96,400.00

1.92 VEH SIG SEC (12IN) LED (GRN)

Quantity: 12 UOM: EA Price: $391.00 Total: $4,692.00

1.93 VEH SIG SEC (12IN) LED (GRN ARW)

Quantity: 4 UOM: EA Price: $393.00 Total: $1,572.00

1.94 VEH SIG SEC (12IN) LED (YEL)

Quantity: 12 UOM: EA Price: $391.00 Total: $4,692.00

1.95 VEH SIG SEC (12IN) LED (YEL ARW)

Quantity: 8 UOM: EA Price: $393.00 Total: $3,144.00

1.96 VEH SIG SEC (12IN) LED (RED)

Quantity: 12 UOM: EA Price: $393.00 Total: $4,716.00

1.97 VEH SIG SEC (12IN) LED (RED ARW)

Quantity: 4 UOM: EA Price: $393.00 Total: $1,572.00

1.98 PED SIG SEC (LED) (COUNTDOWN)

Quantity: 6 UOM: EA Price: $719.00 Total: $4,314.00

1.99 BACKPLATE W/REF BRDR (3SEC) (VENT) ALUM

Quantity: 12 UOM: EA Price: $250.00 Total: $3,000.00

1.100 BACKPLATE W/REF BRDR (4SEC) (VENT) ALUM

Quantity: 4 UOM: EA Price: $281.00 Total: $1,124.00

1.101 TRF SIG CBL (TY A)(12 AWG) (4 CONDR)

Quantity: 1465 UOM: LF Price: $3.25 Total: $4,761.25

1.102 TRF SIG CBL (TY A) (12AWG) (5 CONDR)

Quantity: 600 UOM: LF Price: $3.10 Total: $1,860.00

1.103 TRF SIG CBL (TY A) (12AWG) (7 CONDR)

Quantity: 1095 UOM: LF Price: $4.50 Total: $4,927.50

1.104 TRF SIG CBL (TY A) (12AWG) (9 CONDR)

Quantity: 805 UOM: LF Price: $5.95 Total: $4,789.75

1.105 TRF SIG CBL (TY A) (14AWG) (2 CONDR)

Quantity: 1310 UOM: LF Price: $2.85 Total: $3,733.50

1.106 INS TRF SIG PL AM (S) 1 ARM (60') LUM

Quantity: 2 UOM: EA Price: $48,200.00 Total: $96,400.00

1.107 INS TRF SIG PL AM (S) 1 ARM (65') LUM

Quantity: 1 UOM: EA Price: $47,200.00 Total: $47,200.00

1.108 PED POLE ASSEMBLY

Quantity: 3 UOM: EA Price: $3,620.00 Total: $10,860.00

1.109 PED DETECT PUSH BUTTON (APS)

Quantity: 7 UOM: EA Price: $1,180.00 Total: $8,260.00

1.110 PED DETECTOR CONTROLLER UNIT

Quantity: 1 UOM: EA Price: $4,770.00 Total: $4,770.00

1.111 BONDING COURSE

Quantity: 500 UOM: GAL Price: $5.50 Total: $2,750.00

1.112 ITS SYSTEM INTERGRATION

Quantity: 1 UOM: LS Price: $95,000.00 Total: $95,000.00

1.113 8" WATER LINE (PVC C900 DR-14)

Quantity: 95 UOM: LF Price: $75.00 Total: $7,125.00

1.114 8" 45 DEGREE BEND

Quantity: 4 UOM: EA Price: $1,080.00 Total: $4,320.00

1.115 REMOVE/DISPOSE 8" WATER LINE (DI)

Quantity: 95 UOM: LF Price: $21.00 Total: $1,995.00

1.116 8" DI to PVC TRANSITION COUPLING

Quantity: 2 UOM: EA Price: $1,380.00 Total: $2,760.00

Response Total: $4,457,592.74

39.0 **Tab A – Company Information Questionnaire**

Company Information Questionnaire:
Please complete all information requested below and submit with your bid/response package

"The undersigned affirms that they are duly authorized to execute this contract, that this company, corporation, firm, partnership or individual has not prepared this bid in collusion with any other bidder, and that the contents of this bid as to prices, terms or conditions of said bid have not been communicated by the undersigned nor by any employee or agent to any other person engaged in this type of business prior to the official opening of this request. By submitting this bid the vendor agrees to the City of Laredo specifications and all terms and conditions stipulated in the proposed document. That I, individually and on behalf of the business named in this Business Questionnaire, do by my signature below, certify that the information provided in the questionnaire is true and correct ".

Name of Offeror (Business) REIM Construction, Inc.

Signature _____ Date 08/29/2025
of person authorized to sign bid/response

Print Name Miguel A. Ramos
of person authorized to sign bid/response

Title: President

Business Address: 9612 N Stewart Rd

City, State, Zip Code: Mission, Texas 78573

Telephone Number: 956-580-2675 Fax Number: 956-580-4032

Contact Person Email Address: miguelr@reimconstruction.com

Federal Tax ID Number: 26-0477105

Bidders Principal/Corporate Place of Business Address: 9612 N Stewart Rd Mission, TX 78573

Indicated Status of Business:

Corporation X Partnership _____ Sole Proprietorship _____ Other: _____

If other state business status: N/A

State how long under its present business name: 18 years

If applicable, list all other names under which the Business identified above operated in the last five years.

N/A

Will bidder/proposer provide a copy of its financial statements for the last two years, if requested by the City of Laredo? Yes / No

Has the business, or any officer or partner thereof, failed to complete a contract? Yes / No.
Is any litigation pending against the Business? Yes / No.

Is offeror currently for sale or involved in any transaction to expand or to become acquired by another business entity? Yes / No.
If yes, offer need to explain the expected impact both in organizational and directional terms.

Has the Business ever been declared "not responsive" for the purpose of any governmental agency contract award? Yes / No.

Has the Business been debarred, suspended, proposed for debarment, suspended, proposed for debarment, declared ineligible, voluntarily excluded, or otherwise disqualified from bidding, proposing, or contracting? Yes / No

Are there any proceedings, pending relating to the Business responsibility, debarment, suspension, voluntary exclusion, or qualification to receive a public contract? Yes / No.

Has the government or other public entity requested or required enforcement of any of its rights under a surety agreement on the basis of default or in lieu of declaring the Business in default? Yes / No

Is the Business in arrears in any contract or debt? Yes / No

Has the Business been a defaulter, as a principal, surety, or otherwise? Yes / No

Have liquidated damages or penalty provisions been assessed against the Business for failure to complete work on time or for any other reason? Yes / No.

State if company is a certified minority business enterprise:

Historically Underutilized Business (HUB): Yes No

Disadvantaged Business Enterprise (DBE): Yes No

Small Disadvantaged Business Enterprise (SDBC) Yes No

Other: Please specify _____

This company is not a certified minority business: ☐

The above minority information is requested for statistical and tracking purposes only and will not influence the amount of expenditure the City will make with any given company

40.0 Tab B – Conflict of Interest Disclosure (Three Pages)

A form disclosing potential conflicts of interest involving counties, cities, and other local government entities may be required to be filed after January 1, 2006, by vendors or potential vendors to local government entities. The new requirements are set forth in Chapter 176 of the Texas Local Government Code added by H.B. No. 914 of the last Texas Legislature.

Companies and individuals who contract, or seek to contract, with the City of Laredo and its agents may be required to file with the **City Secretary's Office, 1110 Houston Street, Laredo, Texas 78040,** a Conflict of Interest Questionnaire that describes affiliations or business relationships with the City of Laredo officers, or certain family members or business relationships of the City of Laredo officer, with which such persons do business, or any gifts in an amount of $250.00 or more to the listed City of Laredo officer (s) or certain family members.

The new requirements are in addition to any other disclosures required by law. The dates for filing disclosure statements begin on January 1, 2006. A violation of the filing requirements is *a* Class C misdemeanor.

The Conflict of Interest Questionnaire (Form CIQ) may be downloaded from http://www.ethics.state.tx.us/whatsnew/conflict forms.htm.

The City of Laredo officials who come within Chapter 176 of the Local Government Code relating to filing of **Conflicts of Interest Questionnaire (Form CIQ)** include:

1. **Mayor**
2. **Council Members**
3. **City Manager**
4. **Members of the Fire Fighters and Police Officers Civil Service Commission.**
5. **Members of the Planning and Zoning Commission.**
6. **Members of the Board of Adjustments**
7. **Members of the Building Standards Board**
8. **Parks & Leisure Advisory Committee Member,**
9. **Historic District Land Board Member,**
10. **Ethics Commission Board Member,**
11. **The Board of Commissioners of the Laredo Housing Authority**
12. **The Executive Director of the Laredo Housing Authority**
13. **Any other City of Laredo decision making board member**

If additional information is needed please contact Miguel A. Pescador, Purchasing Agent at 956-790-1825

▶ check box if applicable ◀

☒ **I HAVE READ THIS FORM AND ATTEST THAT THERE IS NO CONFLICT OF INTEREST THUS NO VIOLATION OF SECTION 176.006, LOCAL GOVERNMENT CODE EXISTS.**

Miguel A. Ramos		08/29/25
Name	**Signature**	**Date**

CONFLICT OF INTEREST QUESTIONNAIRE
For vendor or other person doing business with local governmental entity

FORM CIQ

This questionnaire reflects changes made to the law by H.B. 1491, 80th Leg., Regular Session.

This questionnaire is being filed in accordance with Chapter 176, Local Government Code by a person who has a business relationship as defined by Section 176.001(1-a) with a local governmental entity and the person meets requirements under Section 176.006(a).

By law this questionnaire must be filed with the records administrator of the local governmental entity not later than the 7th business day after the date the person becomes aware of facts that require the statement to be filed. *See* Section 176.006, Local Government Code.

A person commits an offense if the person knowingly violates Section 176.006, Local Government Code. An offense under this section is a Class C misdemeanor.

OFFICE USE ONLY

Date Received

REIM Construction, Inc.

1 **Name of person who has a business relationship with local governmental entity.**

2 **Check this box if you are filing an update to a previously filed questionnaire.**

(The law requires that you file an updated completed questionnaire with the appropriate filing authority not later than the 7th business day after the date the originally filed questionnaire becomes incomplete or inaccurate.)

3 **Name of local government officer with whom filer has employment or business relationship.**

NONE

Name of Officer

an employment or other business relationship as defined by Section 176.001(1-a), Local Government pages to this Form CIQ as necessary.

A. Is the local government officer named in this section receiving or likely to receive taxable income, income, other than investment income, from the filer of the questionnaire? [ ] Yes [X] No

B. Is the filer of the questionnaire receiving or likely to receive taxable income, other than investment income, from or at the direction of the local government officer named in this section AND the taxable income is not received from the local governmental entity? [ ] Yes [X] No

C. Is the filer of this questionnaire employed by a corporation or other business entity with respect to which the local government officer serves an officer or director, or holds an ownership of 10 percent or more? [ ] Yes [X] No

D. Describe each employment or business relationship with the local government officer named in this section.

Signature of person doing business with the governmental entity

08/29/25
Date

Project: West Laredo Multi-modal Trade Corridor - Phase II
(Flecha/Las Cruces Realignment Project) FY25-ENG-53

Form of Non-Collusive Affidavit

AFFIDAVIT

STATE OF TEXAS {}
COUNTY OF WEBB {}

Miguel A. Ramos

Being first duly sworn, deposes and says:

That he/she is President of REIM Construction, Inc.
(a Partner of officer of the firm of, etc.)

The party making the foregoing proposal or bid, that such proposal or bid is genuine and not collusive or shame; that said Bidder has not colluded, conspired, connived or agreed directly or indirectly, with any Bidder or Person, to put in a sham bid or to refrain from bidding, and has not in any manner, directly or indirectly, sought by agreement or collusion, or communication or conference, with any person, to fix the bid price or affiant or of any other Bidder or to fix any overhead, profit or cost element of said bid price, or of that of any other Bidder, or to secure any advantage against the City of Laredo or any person interested in the proposed Contract; and that all statements in said proposal or bid are true.

Signature of:
Bidder, if the Bidder is an individual
Partner, if the Bidder is a Partnership
✓Officer, if the Bidder is a Corporation

Subscribed and sworn before me this 29th day of August 20 25.

Notary Public

My commission expires: 06/26/2029

YADIRA YVETTE GARCIA
NOTARY PUBLIC
STATE OF TEXAS
NOTARY ID 7614236
MY COMM. EXP. 06-26-2029

42.0 Tab D: City of Laredo - Discretionary Contracts Disclosure (4 pages)

Please fill out this form online, print completed form and submit with proposal to originating department. All questions must be answered.

For details on use of this form, see Section 4.01 if the City's Ethics Code.
***This is a ✓ New Submission or ___ Correction or ___ Update to previous submission.**

***1. Name of person submitting this disclosure form.**

REIM Construction, Inc.

First | M.I. | Last | Suffix

***2. Contract Information.**

a) Contract or Project name(s):

West Laredo Multi-modal Trade Corridot - Phase II
Flecha/Las Cruces Realignment Project

b) Originating Department(s):

***3 Name of individual(s) or entity(ies) seeking a contract with the city (i.e. parties to the contract)**

Name (Print)	Signature	Name (Print)	Signature
Miguel A. Ramos			

***4. List any business entity(ies) that is a partner, parent, subsidiary business entity(ies) of the individual or entity listed in Question 3**

☑ Not applicable. Contracting party(ies) does not have partner, parent, or subsidiary business entities.

☐ Name of partner, parent, or subsidiary business entity(ies):

***5. List any individuals or entities that will be subcontractors on this contract.**

☐ Not applicable. No subcontractors will be retained for this contract.

☑ Subcontractors may be retained, but have not been selected at the time of this submission.

☐ List of subcontractors:

***6. List any attorneys, lobbyists, or consultants that have been retained to assist in seeking this contract.**

☑ Not applicable. No attorneys, lobbyists, or consultants that have been retained to assist in seeking this contract.

☐ List of attorneys, lobbyists, or consultants that have been retained to assist in seeking this contract:

***7. Disclosure of political contributions.**

List any campaign or officeholder contributions made by the following individuals in the past 24 months totaling more than $100 to any current member of City Council, former member of City Council, any candidate for City Council, or to any political action committee that contributes to City Council elections.

a) Any individual seeking contract with the city (Question 3)
b) Any owner of officer of entity seeking contract with the city (Question 3)
c) Any individual or owner or officer of any entity listed above as partner, parent, or subsidiary business (Question 4)
d) Any subcontractor or owner/office of subcontracting entity for the contract (Question 5)
e) The spouse of any individual listed in response to (a) through (d) above
f) Any attorney, lobbyist, or consultant retained to assist in seeking contract (Question 6)

☑ Not applicable. No campaign or officeholder contributions have been made in the preceding 24 months by these individuals.

☐ List of contributors:

Updates on Contributions Required

Information regarding contributions must be updated by submission of a revised form from the date of the submission of this form, up through the time City Council takes action on the contracts identified in response to Question 2 and continuing for 30 calendar days after the contract has been awarded.

***8. Disclosure of conflict of interest**

Are you aware of any fact(s) with regard to this contract that would raise a "conflict of interest" issue under Section 2.01 of the Ethics Code for any City Council member or board/commission member that has not or will not be raised by these city officials?

☑ I am not aware of any conflict(s) of interest issues under Section 2.01 of the Ethics Code for members of City Council or a city board/commission.

☐ I am aware of the following conflict(s) of interest:

***Acknowledgements**

☑ **Updates Required**

I understand that this form must be updated by submission of a revised form if there is any change in the information before the discretionary contract is the subject of action by the City Council, and no later than five (5) business days after any changes has occurred, whichever comes first. This include information about political contributions made after the initial submission and up until thirty (30) calendar days after the contract has been awarded.

☑ **No Contract with City Officials or Staff during Contract Evaluation**

I understand that a person or entity who seeks or applies for city contract or any other person acting on behalf of that person or entity is prohibited from contracting city officials and employees regarding the contract after a Request for Proposal (RFP), Request for Qualifications (RFQ), or other solicitation has been released.

This no-contract provision shall conclude when the contract is posted as a City of Laredo Council agenda item. If contact is required with city officials or employees, the contact shall take place in accordance with procedures incorporated into the solicitation documents. Violation of this prohibited contacts provision set out in Section 2.09 of the Ethics Code by respondents or their agents may lead to disqualification of their offer from consideration.

***Conflict of Interest Questionnaire (CIQ)**
Chapter 176 of the Local Government Code requires contractor and vendors to submit a Conflict of Interest Form (CIQ) to the Office the of City Secretary.

☑ I acknowledge that I have been advised of the requirement to file a CIQ form under Chapter 176 of the Local Government Code.

***Oath**

☑ I swear or affirm that the statements contained in this Discretionary Contracts Disclosure Form, including any attachments, to the best of my knowledge and belief are true, correct, and complete.

Miguel A. Ramos
Name (Print)

Signature

President
Title

REIM Construction, Inc.
Company or DBA

08/29/2025
Date

Please fill this form out online, print and submit completed form with proposal to origination department. All questions must be answered. If necessary to mail, send to:
City of Laredo
P.O. Box 579
Laredo, TX 78042-0579

CERTIFICATE OF INTERESTED PARTIES — FORM 1295

Complete Nos. 1 – 4 and 6 if there are interested parties
Complete Nos. 1,2,3,5, and 6 if there are no interested parties.

OFFICE USE ONLY

1. **Name of business entity filing form, and the city, state, and country of the business entity's place of business.**

   REIM Construction, Inc.

2. **Name of governmental entity or state agency that is a party to the contract for which the form is being filed.**

   City of Laredo

3. **Provide the identification number used by the governmental entity or state agency to track or identify the contract and provide a description of the goods or services to be provided under the contract.**

4.

Name of Interested Party	City, State, Country (place of business)	Nature of Interest (check applicable)	
		Controlling	Intermediary

5. Check only if there is NO Interested Party. [X]

6. **AFFIDAVIT** I swear, or affirm, under penalty of perjury, that the above disclosure is trued and correct.

Signature of Authorized agent of contracting business entity

AFFIX NOTARY STAMP / SEAL ABOVE

YADIRA YVETTE GARCIA ★ NOTARY PUBLIC ★ STATE OF TEXAS NOTARY ID 7614236 MY COMM. EXP. 06-26-2029

Sworn to and subscribed before me, by the said August this the 29th day of, 20 25, to certify which, witness my hand and seal of office.

Signature of officer administering oath	Printed name of officer administering oath	Title of officer administering oath
	Yadira Yvette Garcia	Secretary

ADD ADDITIONAL PAGES AS NECESSARY

Form provided by Texas Ethics Commission

BID BOND

Conforms with The American Institute of Architects, A.I.A. Document No. A-310

KNOW ALL BY THESE PRESENTS, That we, **REIM Construction, Inc.**

9612 Stewart Rd, Mission, Texas 78573

as Principal, hereinafter called the Principal,

and the **Markel Insurance Company**,

of **4521 Highwoods Parkway, Glen Allen, VA 23060**, a corporation duly organized under

the laws of the State of **Illinois**, as Surety, hereinafter called the Surety, are held and firmly bound unto

City of Laredo, Texas as Obligee, hereinafter called the Obligee,

in the sum of **Five Percent of the Greatest Amount Bid**

Dollars (**5% GAB**), for the payment of which sum well and truly to be made, the said Principal and the said Surety, bind ourselves, our heirs, executors, administrators, successors and assigns, jointly and severally, firmly by these presents.

WHEREAS, the Principal has submitted a bid for

West Laredo Multi-Modal Trade Corridor - Phase II (Flecha/Las Cruces Realignment Project) CSJ: 0922-33-076

NOW, THEREFORE, if the Obligee shall accept the bid of the Principal and the Principal shall enter into a Contract with the Obligee in accordance with the terms of such bid, and give such bond or bonds as may be specified in the bidding or Contract Documents with good and sufficient surety for the faithful performance of such Contract and for the prompt payment of labor and material furnished in the prosecution thereof, or in the event of the failure of the Principal to enter such Contract and give such bond or bonds, if the Principal shall pay to the Obligee the difference not to exceed the penalty hereof between the amount specified in said bid and such larger amount for which the Obligee may in good faith contract with another party to perform the Work covered by said bid, then this obligation shall be null and void, otherwise to remain in full force and effect.

Signed and sealed this **29th** day of **August**, **2025**.

Witness

Witness

REIM Construction, Inc. (Seal)
Principal

President
Title

Markel Insurance Company

By **Elizabeth Ortiz** Attorney-in-Fact

POA# 4221992

JOINT LIMITED POWER OF ATTORNEY

KNOW ALL MEN BY THESE PRESENTS: That SureTec Insurance Company, a Corporation duly organized and existing under the laws of the State of Texas and having its principal office in the County of Harris, Texas and Markel Insurance Company (the "Company"), a corporation duly organized and existing under the laws of the state of Illinois, and having its principal administrative office in Glen Allen, Virginia, does by these presents make, constitute and appoint:

Debra Lee Moon, Sandra Lee Roney, Andrea Rose Crawford, Troy Russell Key, John R. Ward, Thomas Douglas Moore, Emily Allison Mikeska, Allyson W Dean, Colin E. Conly, Andrew Gareth Addison, Elizabeth Ortiz, Patrick Thomas Coyle, Ana Owens, Faith Ann Hilty, Christopher Chase Carlisle, Frances Hartung, Stephanie Navarro, Brian P. Bordlee, Ross Laris, Cory Kiper, Kimberly Rochelle Gonzalez, Mark Robert Adams, Crystal Gail Langhorn, Steven Wayne Lewis, Howard Cowan, Alyssa J. Lopez, Andrew Partrick Clark, Kelli A. Gorham, Peggy Gradel Hogan, Sheri Renee Allen, Teresa Ayala

Their true and lawful agent(s) and attorney(s)-in-fact, each in their separate capacity if more than one is named above, to make, execute, seal and deliver for and on their own behalf, individually as a surety or jointly, as co-sureties, and as their act and deed any and all bonds and other undertaking in suretyship provided, however, that the penal sum of any one such instrument executed hereunder shall not exceed the sum of:

In Unlimited Amounts

This Power of Attorney is granted and is signed and sealed under and by the authority of the following Resolutions adopted by the Board of Directors of SureTec Insurance Company and Markel Insurance Company:

"RESOLVED, That the President, any Senior Vice President, Vice President, Assistant Vice President, Secretary, Assistant Secretary, Treasurer or Assistant Treasurer and each of them hereby is authorized to execute powers of attorney, and such authority can be executed by use of facsimile signature, which may be attested or acknowledged by any officer or attorney, of the company, qualifying the attorney or attorneys named in the given power of attorney, to execute in behalf of, and acknowledge as the act and deed of the SureTec Insurance Company and Markel Insurance Company, as the case may be, all bond undertakings and contracts of suretyship, and to affix the corporate seal thereto."

IN WITNESS WHEREOF, Markel Insurance Company and SureTec Insurance Company have caused their official seal to be hereunto affixed and these presents to be signed by their duly authorized officers on the 28th day of July, 2025.

SureTec Insurance Company

By: _____
Michael C. Keimig, President

Markel Insurance Company

By: _____
Lindey Jennings, Vice President

State of Texas
County of Harris:

On this 28th day of July, 2025 A. D., before me, a Notary Public of the State of Texas, in and for the County of Harris, duly commissioned and qualified, came THE ABOVE OFFICERS OF THE COMPANIES, to me personally known to be the individuals and officers described in, who executed the preceding instrument, and they acknowledged the execution of same, and being by me duly sworn, disposed and said that they are the officers of the said companies aforesaid, and that the seals affixed to the proceeding instrument are the Corporate Seals of said Companies, and the said Corporate Seals and their signatures as officers were duly affixed and subscribed to the said instrument by the authority and direction of the said companies, and that Resolutions adopted by the Board of Directors of said Companies referred to in the preceding instrument is now in force.

IN TESTIMONY WHEREOF, I have hereunto set my hand, and affixed my Official Seal at the County of Harris, the day and year first above written.

By: _____
Chelsea Turner, Notary Public
My commission expires 7/6/2028

We, the undersigned Officers of SureTec Insurance Company and Markel Insurance Company do hereby certify that the original POWER OF ATTORNEY of which the foregoing is a full, true and correct copy is still in full force and effect and has not been revoked.

IN WITNESS WHEREOF, we have hereunto set our hands, and affixed the Seals of said Companies, on the 29th day of August, 2025.

SureTec Insurance Company

By: _____
M. Brent Beaty, Assistant Secretary

Markel Insurance Company

By: _____
Andrew Marquis, Assistant Secretary

Any Instrument Issued in excess of the penalty stated above is totally void and without any validity. 4221992
For verification of the authority of this Power you may call (713)812-0800 on any business day between 8:30 AM and 5:00 PM CST.

Markel Insurance Company

THIS BOND RIDER CONTAINS IMPORTANT COVERAGE INFORMATION

Statutory Complaint Notice

To obtain information or make a complaint: You may call the Surety's toll free telephone number for information or to make a complaint at: 1-866-732-0099. You may also write to the Surety at:

Markel Insurance Company
9500 Arboretum Blvd., Suite 400
Austin, TX 78759

KCI

ISO 9001:2015 CERTIFIED

ENGINEERS • PLANNERS • SCIENTISTS • CONSTRUCTION MANAGERS

7109 N. Bartlett, Suite 201 • Laredo, Texas 78041 • Phone (956) 729-7844

August 22, 2025

Eluid De Los Santos, P.E. City Engineer
City of Laredo, Engineering Department
1110 Houston St.
Laredo, Texas, 78040

359700

RE: Addendum #1
West Laredo Multi-modal Trade Corridor – Phase II
Flecha/Las Cruces Realignment Project

Dear Mr. De Los Santos,

Please accept this letter as formal notification of Addendum #1 for the West Laredo Multi-modal Trade Corridor – Phase II (Flecha/Las Cruces Realignment) Project. This addendum incorporates several key updates and revisions necessary for the bidding process.

Key revisions addressed in Addendum #1:

Pre-Bid Meeting Question/Answer: Answers to key questions raised during the Pre-Bid meeting held on 8/13/25 are included to clarify project expectations and address potential bidder's concerns.

<u>August 13, 2025 Pre-Bid Meeting Questions</u>

1) Are we (contractors) responsible for testing Lab overtime?
   - **A. The contractor is responsible for the Testing Lab and Construction Inspector overtime if decides to work outside of City Schedule.**
2) Is this a Working Day or Calendar Day Project?
   - **A. Working Day Project. Contractor must obtain permission to work on weekends and holidays**
3) For testing that fails, who is responsible for retesting?
   - **A. Retesting is the responsibility of the Contractor**
4) Is there an alternate for concrete pavement?
   - **A. There are no alternates**
5) Is there an Engineers Estimate?
   - **A. The City does not disclose Engineers Estimate**
6) Can we get a list of registered traffic signal contractors?
   - **A. Contractor shall meet the requirements listed in the plans and specifications**
7) **General Notes** are only indicated in the plan set and are not included in the specification
8) The required **Child Support** form is not located adjacent to the Bid Form but is found later in the specifications and attached

<u>Cit-E-Bid posted questions</u>

9) Would you please post the pre-bid attendees list?
   - **A. List attached**
10) What is the estimated cost range?
   - **A. The City does not disclose the estimated construction cost.**

Please review the attached Addendum #1 and incorporate its revisions into your bidding process. We encourage you to reach out to the project team if you have any questions or require further clarification.

Sincerely,

William Schaefer, P.E.
Senior Project Manager
KCI Technologies, Inc.

8/28/25

CITY OF LAREDO
ENGINEERING DEPARTMENT

PLANS AND SPECIFICAIONS FOR

PROJECT MANUAL:

West Laredo Multi-modal Trade Corridor – Phase II (Flecha/Las Cruces Realignment Project)
Project No: DMO 2012 (628)
CSJ: 0922-33-076
BID ISSUE DATE: August 4, 2025

Honorable Dr. Victor D. Treviño, Mayor

Gilbert Gonzalez
Council Member
District I

Ricardo Richie Rangel, Jr.
Council Member
District II

Melissa R. Cigarroa
Council Member
District III

Ricardo "Rick" Garza
Council Member
District IV

Ruben Gutierrez, Jr
Council Member
District V

Dr. David Tyler King
Council Member
District VI

Vanessa Perez
Mayor Pro Tempore
District VII

Alyssa Cigarroa
Council Member
District VIII

Joesph Neeb
City Manager

Eliud De Los Santos, P.E.
City Engineer
1110 Houston Street
Laredo, TX 78040
(956) 791-7346

Prepared by:
KCI Technologies, Inc
7109 N. Bartlett Ave., Suite 201
Laredo, TX 78041 (956) 729-7844
www.KCI.com
Texas Registered Engineering Firm (TBPE Firm No. F-10573)

THIS PAGE INTENTIONALLY LEFT BLANK

Engineers Seal Page

Control: 0922-33-076
Project: DMO 2012 (628)
Highway: CS
County: Webb

"The enclosed specifications, special specifications, special provisions, general notes and specification data in this document have been issued by me or under my responsible supervision as being applicable to this project. Alteration of a sealed document without proper notification of the responsible engineer is an offense under the Texas Engineering Practice Act."

The seal appearing on this document was authorized by Kyle Gass, P.E. on 7/31/25

CITY OF LAREDO
ENGINEERING DEPARTMENT

PROJECT SCHEDULE

West Laredo Multi-modal Trade Corridor - Phase II
(Flecha/Las Cruces Realignment Project)
Project No: DMO 2012 (628)
CSJ: 0922-33-076

Sunday, August 3, 2025	Advertise for Bids
Sunday, August 10, 2025	Advertise for Bids
Wednesday, August 13, 2025	Pre-Bid Meeting at 10:00 A.M. (NON-Mandatory) Engineering Department and Teams Meeting
Monday, August 18, 2025	Cut-off questions at 12:00 P.M.
Friday, August 22, 2025	Issue Addendum
Friday, August 29, 2025	Receive at 10:00 A.M. at the City Secretary's Office and Cit-E-Bid Opening at City Secretary's Office and using WebEx Meeting
Friday, September 12, 2025	Bid tabulations and recommendation letter to City
Wednesday, September 17, 2025	Bid tabulations and recommendation letter from City to TxDOT
Friday, September 26, 2025	Award letter from TxDOT to City
City Council meeting October 2025	Award Bid (Tentative)

County: WEBB
Project: DMO 2012 (628)
CSJ: 0922-33-076
Highway: CS
Limits: **From:** From intersection of FM 1472 and Flecha Lane
To: 0.174 mi east of FM 1472

Right of Way Acquisition Certification

This is to certify that all right-of-way has been acquired in accordance with the current FHWA directive(s) covering the acquisition of real property.

Relocation Advisory Assistance Certification

This is to certify that this project did not cause any displacement and the steps relative to relocation advisory assistance and payments under the current State requirement(s) covering the administration of the Highway Relocation Assistance Program were not required.

Right of Way Encroachment Certification

This is to certify that all right of way encroachments have been removed except for those encroachments listed below which will possibly remain after final acceptance of the project. These encroachments will not impair the highway or interfere with the free and safe flow of traffic thereon and do not impose a constructability issue. This temporary encroachment occupancy does not equate to permission or a right of occupancy and all encroachments will be disposed of or remedied in accordance with State and Federal requirements (refer to TxDOT memorandum dated May 16, 1994). A special provision, "Important Notice to Contractors", indicating description, location and status, is included in the proposal documenting the existence of the following encroachments.

DESCRIPTION	LOCATION	STATUS
Mobile Truck plumbing	Property 621206	Removal by City of Laredo prior to construction

Docusign Envelope ID: 877A2B84-9EC8-47C3-A239-451CBC20DD9B

Utility Clearance Certification

This is to certify that all utilities have been adjusted in accordance with the appropriate directives covering the adjustment of utilities, except those utilities listed below which will be adjusted in accordance with the appropriate directives. All of the utility companies have been contacted and it has been determined that the below listed dates are estimated and subject to change prior to letting. The adjustment of utilities in accordance with the below dates will not impede or delay the Contractor in construction of this project.

STA./LOCATION	DESCRIPTION	OWNER	EXPECTED COMPLETION DATE
11+97	Electric poles and overhead lines (Crossing)	AEP Texas	September 2025
20+38 23' O/S Left	Underground gas line (Parallel)	Centerpoint Energy	September 2025
11+97	Overhead lines on Electric poles (Crossing)	AT&T	September 2025
11+97	Overhead lines on Electric poles (Crossing)	Spectrum	September 2025

Railroad Clearance Certification

This is to certify that railroad work was not required for this project.

For Local Governmental Entity:

Ramon E. Chavez

Name: Ramon E. Chavez, P.E.
Title: City Engineer / Assistant City Manager
City of Laredo

Date: 07/10/2025

For Texas Department of Transportation:

DocuSigned by:
Epigmenio Gonzalez, P.E.
A5A9883ECD1E4F7...

Epigmenio "Epi" Gonzalez, P.E.
District Engineer
TxDOT Laredo District

Date: 7/16/2025

TABLE OF CONTENTS

Project: **West Laredo Multi-modal Trade Corridor – Phase II**
(Flecha/Las Cruces Realignment Project)
CSJ: 0922-33-076

Division A

Section A-1 Notice to Bidders
Section A-2 Information to Bidders
Section A-3 Advise to Bidders
Section A-4 Information to Contractors
Section A-5 Proposal, Affidavit, Bid Schedule, Information from Bidders, and Bid Bond
Section A-6 Checklist for Bidders
Section A-7 Construction Contract
Section A-8 Contractors/Subcontractors Certificate of Insurance
Section A-9 Performance Bond/Payment Bond
Section A-10 Notice of Award
Section A-11 Certificate of Owner's Attorney
Section A-12 Notice to Proceed

Division B

Section B-1 Contract Time & Liquidated Damages
Section B-4 Inspection by City
Section B-5 Project Sign
Section B-6 Illegal Dumping

General Specifications for LAM

General Requirements and Covenants

Geotechnical Engineering Report

City of Laredo Utility Specifications

DIVISION A
SECTION A-1

NOTICE TO BIDDERS

The City of Laredo, hereafter called OWNER, is requesting Bids for the furnishing of all necessary materials, machinery, equipment, labor, superintendence, and all other services and appurtenances required for **FY25-ENG-53 West Laredo Multi-modal Trade Corridor - Phase II (Flecha/Las Cruces Realignment Project).**

Bidders are cautioned to refer to other sections of the Project Specifications Manual, Drawings, Addenda and other Bid Documents included in the Bid package for further details.

Sealed bids will be received by the City Secretary's Office, located at 1110 Houston Street, 3rd Floor, City Hall Building, Laredo, Texas, or submitted electronically via Cit-E-Bid, until **10:00 AM on Friday, August 29, 2025. Bids will be publicly opened, read aloud, and taken under advisement at that same time and date.**

FY25-ENG-53

West Laredo Multi-modal Trade Corridor - Phase II (Flecha/Las Cruces Realignment Project).

This project consists of realigning approximately 916.27 LF of roadway from Las Cruces to FM 1472 (Mines Rd) including Obliterating Abandon Roadway, D-GR HMA TY-B, D-GR HMA TY-C, Concrete Box Culvert, concrete sidewalks, Concrete Curb, Metal Beam Guard Fence, ADA ramps, traffic signals, etc.

Construction contract time for this project is on hundred seventy-four (174) working days.

All complete Bid Proposal in the hands of the designated official at the time set in this Notice to Bidders shall be considered. All Bids Proposal shall be accompanied by an acceptable Bid Deposit in an amount of not less than five percent (5%) of the total Base Bid. Bid Deposit will be verified by the Owner prior to bid certification. Bids without an acceptable Bid Deposit will NOT be considered. Hand-delivered Bid Proposals and Bid Guaranties must be original and must be sealed in an envelope plainly marked with the name of the project as shown above, and the name and address of the Bidder. For Bidders electing to submit Bids and Bid Guaranties electronically via Cit-E-Bid, Bid Guaranties will be verified by Owner prior to bid certification and electronic copies of Bid Guaranties will not be returned to Bidders. Mailed bids (i.e. USPS, FedEx, UPS), telegraphic, or facsimile submittals will not be allowed/considered. Refer to Section A-2 Information to Bidders for complete information.

Contractor must comply with the Federal Labor Standards Provision, Davis Bacon Act, Equal Opportunity Clause, Wage Determination and HUD and Urban Development Federal Requirements especially as it regards payrolls and basic records. All materials shall follow the Build America, Buy America Act (BABAA).

Bidders are expressly advised to review Item 3L of the General Conditions of the proposed Contract as to the causes which may lead to the disqualification of a bidder and/or the rejection of a bid proposal. Unless all bids are rejected, the Owner agrees to give Notice of Award of Contract to the successful bidder within ninety (90) days of the bid opening.

Bidders are expected to inspect the site of the work and inform themselves regarding all local conditions.

Bidders are advised to review the **Key Points of Public Right-of-Way Ordinance** on Legal Relations and Responsibilities to the Public Division 7L.17.6. The entire ordinance may be viewed at the following website under Building Services Department: http://www.ci.laredo.tx.us/Building/

A pre-bid meeting for prospective bidders will be held on Wednesday, August 13, 2025, at 10:00 AM at the City of Laredo Engineering Department, located on the 2nd Floor of City Hall. Bidders may also participate electronically via the following link:

Join the meeting now:

https://teams.microsoft.com/l/meetup-join/19%3ameeting_OTRiMmI0NTQtMjM0MC00NGJmLTg5ODQtODRkNDBjZDBlOTYw%40thread.v2/0?context=%7b%22Tid%22%3a%229d2e45ad-bf93-4895-b24b-9bbd03698a60%22%2c%22Oid%22%3a%224d4583fa-d48b-4044-b0fb-e388945179d7%22%7d

Meeting ID: 297 216 481 203 4

Passcode: 4Y6m8Nq3

The Construction Documents and Specification may be viewed and/or downloaded free of charge from either of the following City of Laredo websites:
https://cityoflaredo.ionwave.net/

Mario Maldonado, Jr.
City Secretary

Publication dates:
Sunday, August 3, 2025
Sunday, August 10, 2025

REC'D CITY SEC OFF
JUL 31 '25 PM3:36

SECTION A-2

INFORMATION TO BIDDERS

Sealed bids will be received at **City Secretary's Office**, **1110 Houston Street, 3rd floor, City Hall Building, Laredo, Texas, or electronically through Cit-E-Bid** for the furnishing of all necessary materials, machinery, equipment, labor, superintendence, and all other services and appurtenances required for certain **improvements** in the City of Laredo and shall include acknowledgment of addenda submitted, and all other documents included in said bid call. Said bids shall be marked,

Project Name:
West Laredo Multi-modal Trade Corridor – Phase II
(Flecha/Las Cruces Realignment Project)
CSJ: 0922-33-076

This project consists of realigning 916.27 LF of roadway from Las Cruses to FM 1472 (Mines Rd) including 2,575 SY Obliterating Abandon Roadway, 4,710 ton D-GR HMA TY-B, 690 ton D-GR HMA TY-C, 907 LF Concrete Box Culvert, 1,030 SY concrete sidewalk, 2,669 LF Concrete Curb, Metal Beam Guard Fence, ADA ramps, traffic signals, etc.

Construction contract time for the project is one hundred seventy-four (174) working days.

The following DBE goal is established for the Project: 6.0%

Bids shall be based on a per unit of work basis and shall include dollar amounts for each specific unit in improvements listed including those items listed as alternatives as per the proposal sheet included in the specifications of this project.

Each proposal and a proposal guaranty must be originals and must be sealed in an envelope plainly marked with the name of the project as shown above, and the name and address of the Bidder. For Bidders electing to submit Bids and Bid Guaranties electronically via Cit-E-Bid, Bid Guaranties will be verified by the Owner prior to bid certification and electronic copies of Bid Guaranties will not be returned to Bidders. Mailed bids (i.e. USPS, FedEx, UPS), telegraphic, or facsimile submittals will not be allowed/considered. Only the bids and bid guaranties actually in the hands of the designated official at the time set in this Notice to Bidders shall be considered.

Further, on federally funded projects, contractor must comply with the Federal Labor Standards Provision, Davis Bacon Act, Equal Opportunity Clause, Wage Determination and HUD and Urban Development Federal Requirements especially as it regards payrolls and basic records. All structural and reinforcement steel shall follow the Build America, Buy America Act (BABAA)

Only the bids and bid guaranties actually in the hands of the designated official at the time set in this Notice to Bidders shall be considered. Bids submitted by telephone, telegraph, or fax, will not be considered.

The City reserves the right to award the contract on the basis of the alternative which appears most advantageous to the City, to reject any or all bids, to waive objections based on failure to comply with formalities, and to allow the correction of obvious or patent errors. Bidders are expressly advised to review Item 3L of the General Conditions of the proposed contract as to the causes which may lead to the disqualification of a bidder and/or the rejection of a bid proposal. Unless all bids are rejected, Owner agrees to give Notice of Award of contract to the successful bidder within ninety (90) days from the date of the bid opening.

Bidders for the construction work must submit a satisfactory cashier's or certified check, or bidder's bond having a minimum **Best's Rating A** according to Best's Key Rating Guide Latest Edition from a surety duly authorized and licensed in the State of Texas, payable without recourse to the order of the City of Laredo, Texas, in an amount not less than five percent (5%) of the total bid based on the bid which check or bond shall be submitted as a guarantee that the bidder will enter into a contract, and execute performance and payment bonds within ten (10) days after Notice of Award of contract is given to him for contracts in excess of $50,000.00. Bids without the required check or bond will NOT be considered.

The successful bidder for the construction of the improvements must furnish a Certificate of Insurance, and a satisfactory Performance Bond in the amount of 100% of the total contract price, and a satisfactory Payment Bond in such amount, duly executed by such bidder as principal and by a corporate surety duly authorized so to act under the laws of the State of Texas. The successful bidder will be required to provide Performance and Payment Bonds issued by an insurance company which meets the minimum State requirements and is licensed in the State of Texas, and has a Best's Key according to Best's Key Rating Guide Latest Edition as follows:

Construction Contract	Minimum Best's Rating
50,001 - 250,000	A
250,000 - 1,000,000	A
Over 1,000,000	A

All lump sum and unit prices must be stated in both script and figures.

Bidders are expected to inspect the site of the work and to inform themselves regarding all local conditions.

The Instructions to Bidders, Forms of Bid, Form of Contract, Plans, Specifications, Form of Bid Bond, Performance and Payment Bonds and other contractual documents may be examined free of charge at the City of Laredo Engineering Department, 1110 Houston Street, Laredo, Texas 78040.

Copies of the plans and specifications may be reviewed free of charge at the City Engineer's office, 1110 Houston Street, Laredo, Texas, or on the Cit-E-Bid web page under the Attachments Section. https://cityoflaredo.ionwave.net/

Bid proposals over $50,000.00 shall comply with all conditions of the bid documents.

In the event the base bid amount is $50,000.00 or LESS than $50,000.00, a Payment Bond and Performance Bond will NOT BE REQUIRED. A Bid Guarantee in the form of a Cashier's or Certified Check or Bid Bond and the Certificate of Insurance however, WILL BE REQUIRED. Under the above conditions, the successful bidder for the project is hereby advised that the total contract price will be paid in ONE PAYMENT upon completion and acceptance of the project by the City of Laredo. Cashier's checks are not to be released until a contract for the project has been approved by City Council and signed by the City Manager.

Any other division or section of this project's specifications having reference to Bid Guarantee, Cashier's or Certified Check, Bid Bond, Payment Bond, or Performance Bond, or having mention at all, to the requirements of bonds, is hereby amended to concur with the above conditions ONLY when the base bid is LESS THAN $50,000.00.

Bidders are advised to contact the City Engineering Department at 1110 Houston Street, Laredo, Texas, 78040, telephone number (956) 791-7346, for visits to project site, and for any additional information required on the project.

Contractor's attention is directed to Special Provision 000-6233, "Important Notice to Contractors" and "Statement of Materials and Other Charges" which will be included in all projects, beginning with the September 1991 letting. These establish the procedures whereby the Contractor will be permitted to obtain an exemption from the sales tax on certain materials. See Comptroller's Rule 2.291 and Texas Tax Code Chapter 151, as mended by House Bill Number 11, Acts 1991, 72nd Legislature, First called Session. The Contractor will be required to separate the charges for materials from all other charges and will be furnished an Exemption Certificate of reach contract the Department. Also, the Contractor must issue resale certificates to suppliers. Sales tax permit applications and information regarding resale certificates may also be obtained by calling the State Comptroller's toll-free number 1-800-252-5555.

Disadvantaged Business Enterprise (DBE) Program
Commitment Agreement Form

This commitment is subject to the award and receipt of a signed contract from the City of Laredo for the subject project.

Project #:		**County:**		**Contract-CSJ:**	
Items of work to be performed (attach a list of work items if more room is required):					
Bid Item #	**Item Description**	**Unit of Measure**	**Unit Price**	**Quantity**	**Total Per Item**
				Total	

The contractor certifies by signature on this agreement that subcontracts will be executed between the prime contractor and the DBE subcontractors as listed on the agreement form. If a DBE Subcontractor is unable to perform the work as listed on this agreement form, the prime contractor will follow the substitution/replacement approval process as outlined in the Contract DBE Special Provision.

IMPORTANT: The signatures of the prime contractor and the DBE, and the total commitment amount must always be on the same page.

Prime Contractor:		Name/Title (please print):
Address:		Signature:
Phone:	Fax:	
E-mail:		Date:
DBE:		Name/Title (please print):
Vendor No.:		
Address:		Signature:
Phone:	Fax:	
E-mail:		Date:
Subcontractor (if the DBE will be a second tier sub):		Name/Title (please print):
Address:		Signature:
Phone:	Fax:	
E-mail:		Date:

The City of Laredo maintains the information collected through this form. With few exceptions, you are entitled on request to be informed about the information that we collect about you. Under §§552.021 and 552.023 of the Texas Government Code, you also are entitled to receive and review the information. Under §559.004 of the Government Code, you are also entitled to have us correct information about you that is incorrect.

All commitments are to be submitted in this format to the City's designated DBE Liaison.

DBE Final Report

The DBE final report form should be filled out by the contractor and submitted to the City upon completion of the project. The report should reflect all DBE activity on the project. The report will aid in expediting the final estimate for payment. If the DBE goal requirements were not met, documentation supporting good faith efforts must be submitted.

Project: _____ Contract CSJ: _____

County: _____ Control Project: _____

Letting Date: _____ DBE Goal:_____%

Contractor:_____ Contract Amount: _____

Vendor Number	Name of DBE Sub/Supplier	**RC or RN**	DBE Goal – Total Amount Paid to Date†	Amount Paid to Non-DBE 2nd Tier Subs & Haulers‡	For City Use Only

* Race-Conscious or Race-Neutral.

† Goal/commitment progress report amount and/or race-neutral amount. Do not subtract non-DBE second-tier subcontractors and haulers from this column.

‡ DBE subcontractors paid to non-DBE subcontractors/haulers.

Was there a project under-run caused by a City change order that impacted DBE Goal attainment? ☐ Yes ☐ No Change Order Number _____

This is to certify that _____% of the work was completed by Disadvantaged Business Enterprises as stated above.

By _____ Per: _____

Name of General Contractor Contractor's Signature

Subscribed and sworn to before me, this _____ day of _____ , A.D. _____

_____ _____

Notary Public County

My commission expires: _____

The City maintains the information collected through this form. With few exceptions, you are entitled on request, to be informed about the information that is collected about you. Under §§552.021 and 552.023 of the Texas Government Code, you also are entitled to receive and review the information. Under §559.004 of the Government Code, you are also entitled to have us correct information about you that is incorrect.

DBE Good Faith Effort Plan

NAME OF PROJECT: _____

SECTION A - BIDDER INFORMATION:

Name of Firm: _____

Address: _____

City _____ State: _____ Zip: _____

Contact Person: _____ Telephone: _____

Email Address: _____

Age of Firm (Number of Years in Business): _____ Years

Annual Gross Receipts of the Firm: _____ Less than $500,000 _____ $500,000 to $1 million
_____ $1 million to $2 million _____ $2 million to $5 million
_____ Over $5 million

Is your firm Certified: Yes _____ No: _____ If certified, Certification Number: _____

Type of Certification _____ DBE _____ MBE _____ WBE _____ AABE _____ SBE

1. List **ALL SUBCONTRACTORS/SUPPLIERS** that will be utilized on this contract. A Letter of Intent (DBE Form 2) must be submitted for all subcontractors/suppliers listed below within seven (7) business days from the bid date.

Name & Address of Company	Scope of Work/Supplies to be Performed/Provided by Firm	Estimated Contract Amount	If Firm is DBE Certified, Provide Certification Number
1.			
2			
3.			
4.			
5.			
6.			

(Use Additional Sheets if Necessary)

SECTION B – DBE COMMITMENTS

The DBE goal on this project is: ____6.0____%

1. The undersigned bidder has satisfied the requirements of the bid specification in the following manner (please check the appropriate space:

   _____ The bidder/offeror is committed to a minimum of _____ % DBE utilization on this contract.

   _____ The bidder/offeror (if unable to meet the DBE goal of _____%) is committed to a minimum of _____% DBE utilization on this contract. *(If contractor is unable to meet the goal, please fill out Section C and submit documentation demonstrating good faith efforts).*

2. Name and phone number of person appointed to coordinate and administer the Federal DBE requirements on this project.

   Name: _____

   Title: _____

   Phone Number: _____

IF DBE GOAL WAS MET, PROCEED TO PAGE 4 AND SIGN THE GFEP. IF GOAL WAS NOT MET, PROCEED TO SECTION C.

SECTION C – GOOD FAITH EFFORTS (Fill out only, if the DBE goal was not achieved).

1. List all firms you contacted with subcontracting/supply opportunities for this project that will not be utilized for this contact by choice of the bidder, subcontractor, or supplier. ***Written notices to firms contacted by the bidder for specific scopes of work identified for subcontracting/supply opportunities must be provided to subcontractor/supplier not less than five (5) business days prior to bid/proposal due date.*** The following information is required for all firms that were contacted of subcontracting/supply opportunities:

Name & Address of Company	**Scope of Work/Supplies to be Performed/ Provided by Firm**	**If Firm is DBE Certified, Provide Certification Number**	**Date Written Notice Was Sent and Method (Letter, Fax, E-mail)**	**Reason Agreement Was Not Reached**
1.				
2.				
3.				
4.				
5.				
6.				
7.				
8.				
9.				
10.				

(Use additional sheets as needed)

In order to verify a bidder's good faith efforts, please provide to the City with copies of the written notices to all firms contacted by the bidder for specific scopes of work identified in relation to the subcontracting/supply opportunities in the above named project. Copies of said notices must be provided to the DBE Liaison within five (5) business days after the bid is due. Such notices shall include information on the plans, specifications and scope of work.

2. Did you attend the pre-bid conference scheduled by the City for this project? _____ Yes _____ No

3. List all DBE listings or directories, contractor associations, and/or any other associations utilized to solicit DBE subcontractors/suppliers:

_____

_____

4. Discuss efforts made to define additional elements of the work proposed to be performed by DBEs in order to increase the likelihood of achieving the goal: _____

_____

_____

5. Indicate advertisement mediums used for soliciting bids from DBEs. (Please attach a copy of the advertisement(s):

_____

_____

6. Discuss efforts made to assist interested DBEs in obtaining bonding, lines of credit, or insurance: _____

_____

_____

7. Discuss efforts made to assist interested DBEs in obtaining necessary equipment, supplies, materials, or related assistance or services: _____

_____

_____

AFFIRMATION

I HEREBY AFFIRM THAT THE ABOVE INFORMATION IS TRUE AND COMPLETE TO THE BEST OF MY KNOWLEDGE. I FURTHER UNDERSTAND AND AGREE THAT, THIS DOCUMENT SHALL BE ATTACHED THERETO AND BECOME A BINDING PART OF THE CONTRACT.

NAME AND TITLE OF AUTHORIZED OFFICIAL:_____

SIGNATURE:_____DATE:_____

NOTE:

1. If the DBE goal was not met, the TCI DBE Liaison Officer will evaluate the "good faith efforts" of a firm. The Good Faith Effort Plan for Federally Funded Contracts must be approved by the Transportation and Capital Improvements Department DBE Liaison Officer prior to award of contract.

2. If the DBE Liaison determines that the bidder has not made good faith efforts, then the bidder shall have the opportunity to appeal this decision to the Transportation and Capital Improvements Department Director. The Director shall review the written documentation presented by bidder and determine whether bidder has adequately documented good faith efforts. If the Director determines that the bidder did not make good faith efforts to meet the goal, this final decision is not administratively appealable to the Department of Transportation.

FOR City of Laredo TCI DEPT USE ONLY:

Plan Reviewed by _____ Date: _____

Signature of DBE Liaison

Recommendation: Approval: _____ Denial: _____

Revised:
DBE GFEP FOR CONSTRUCTION CONTRACTS

DBE Monthly Progress Report

Project: _____ Contract CSJ: _____

County: _____ District: _____

Letting Date: _ For Month of (Mo./Yr.): _____

Contractor: _____ Contract Amount: _____

DBE Goal: _____% DBE Goal Dollars: _____

Vendor Number	Name of DBE Sub/Supplier	* RC or RN	** DBE $ Amt Paid for Work Performed this Period (X)	*** $ Amt Paid to Non-DBE 2nd Tier Subs and Haulers (Y)	Amt Paid to DBEs to Date (X-Y)	For City use Only

* Race Conscious or Race Neutral.

** Goal/commitment progress report amount and/or race-neutral amount. **Do not subtract** non-DBE second-tier subcontractors and haulers from this column.

*** Report amount of payment DBE subcontractors paid to non-DBE subcontractors/haulers.

If using a non-DBE hauling firm that leases from DBE truck owner-operators, payments made to each owner- operator must be reported separately.

Any changes to the DBE commitments must be reported to the City and TxDOT.

Submission of this report for periods of negative DBE activity is required. This report is required until all DBE subcontracting or material supply activity is completed.

I hereby certify that the above is a true and correct statement of the amounts paid to the DBE firms listed above.

Signature: _____ Date: _____

Company Official

This report must be sent to the City's DBE Liaison within 15 days following the end of the calendar month.

The City maintains the information collected through this form. With few exceptions, you are entitled on request to be informed about the information that is collected about you. Under §§552.021 and 552.023 of the Texas Government Code, you also are entitled to receive and review the information. Under §559.004 of the Government Code, you are also entitled to have us correct information about you that is incorrect.

DBE Prime Contractor Payments to Non-DBE Subcontractors

Name of Non-DBE Subcontractor	$ Amount Paid This Period	Total $ Amount Paid

Send this report to the City's DBE Liaison. Report is due within 15 days following the end of each calendar month.

Signature: _____ Date: _____
of Company Official

The City of Laredo maintains the information collected through this form. With few exceptions, you are entitled on request to be informed about the information that is collected about you. Under §§552.021 and 552.023 of the Texas Government Code, you also are entitled to receive and review the information. Under §559.004 of the Government Code, you are also entitled to have us correct information about you that is incorrect.

Disadvantaged Business Enterprise Percentage Goal

City Project Number: DMO 2012 (628)

TxDOT CSJ Number: 0922-33-076

The goal for Disadvantaged Business Enterprise (DBE) participation in the work to be performed under this construction contract is __6__% of the Contract amount.

Prompt Pay Certification

In accordance with the requirements of Article 9, "Payment Provisions for Subcontractors," submit this certification form to the City prior to the end of the month following the month payments were received from the City and the month following the month when final acceptance occurred, at the end of the project. (Final submission may be made prior to final acceptance if all subcontractor work and supplier material furnished for the project is complete and the subcontractors and suppliers final payments have been made in full.) The City may withhold payments or suspend work for failure to submit this form or provide prompt payment in accordance with the contract. This certification is applicable to materials the Contractor purchases to remain as part of the final project and to first tier subcontractors on the project and associated project specific locations. (Subcontractors and suppliers are to comply with the prompt payment requirements.)

Certification

"I certify that to the best of my knowledge and with the exception of those subcontractors or suppliers listed below, all subcontractors and suppliers have been paid in accordance with the contract (10 days after receiving payment for the work performed by the subcontractor) and that any retainage held on a subcontractor or supplier's work has been released within 10 days after satisfactory completion of all of the subcontractors' or suppliers' work."

Project Name: _____ CSJ: _____

Estimate Period: _____ _____ or _____

Month Year Final Subcontractor and Supplier Payment Date

_____ _____ _____

Signature Title Date

Printed Name: _____

The following firms have not been paid for reasons listed:

Firm	* Reason for Non-Payment

*Only reasons based on dispute on subcontractor or supplier noncompliance may be accepted.

This certification is for the City's information only and does not place any obligations on the part of the City with regard to any part, including but not limited to, any subcontractor and Contractor's surety.

The City of Laredo maintains the information collected through this form. With few exceptions, you are entitled on request to be informed about the information that we collect about you. Under Sections 552.021 and 552.023 of the Government Code, you also are entitled to receive and review this information. Under Section 559.004 of the Government Code, you are also entitled to have us correct information about you that is incorrect.

SECTION A-3

ADVISE TO BIDDERS

Project Name:
West Laredo Multi-modal Trade Corridor – Phase II
(Flecha/Las Cruces Realignment Project)
CSJ: 0922-33-076

The Contractor's attention is directed to the State of Texas Comptroller of Public Accounts Limited Sales Excise and Use Tax Rules and Regulations, Paragraph 3 of Ruling No. 9. Repairmen and Contractors (amended April 3, 1972). Reference Article 20.01 (T). Upon compliance with certain conditions, this ruling provides for exemption from this tax of materials incorporated into work done for an exempt agency under a Contract. The City is an exempt agency.

Any Bidder may elect to exclude this sales tax from his bid. If the Bidder submitting the lowest acceptable bid for performing the work on this project elects to comply with the above ruling on any bid item included in this Contact by obtaining any necessary permit or permits from the State Comptroller allowing the purchase of material for incorporation into this project without having to pay the Limited Sales, Excise and Use Tax at the time of purchase, he shall upon Award of Contract submit a statement in satisfactory form in which his bid prices to the City for materials are listed separately from all other charges, either by bid item or by total as required by the comptroller. This statement shall be included in and made part of the Contract.

The City will make no further allowance for and will make no price adjustment above or below the originally bid unit price on account of this tax. It shall be the Contractor's sole responsibility, if he elects to exclude the sales tax from his bid, to comply with the aforementioned Ruling No. 9 and with any other applicable rules, regulation, or laws pertaining to the Texas Limited Sales, Excise and Use Tax which may now or at any time during the performance of this Contract be in effect, and the City shall have no responsibility for any sales or use tax which the Contractor may be required to pass as a result of his failure or the City's failure to comply with said rules, regulations or laws, or as the result of the performance of the Contract or any part thereof by the Contractor.

Bidders are cautioned that materials which are not permanently incorporated into the work are not eligible for exemption and are not to be included in the statements as "Materials" (example: fuel, lubricants, tools, forming materials, etc.).

SECTION A-4

INFORMATION TO CONTRACTORS

Project Name:
West Laredo Multi-modal Trade Corridor – Phase II
(Flecha/Las Cruces Realignment Project)
CSJ: 0922-33-076

The Contractor's attention is directed to Special Provision 000-6233, "Important Notice to Contractors", and "Statement of Materials and Other Charges" which will be included in all projects, beginning with the September, 1991 letting. These establish the procedures whereby the Contractor will be permitted to obtain an exemption from the sales tax on certain materials. See Comptroller's Rule 3.291 and Texas Tax Code, Chapter 151, as amended by House Bill Number 11, acts 1991, 72nd Legislature, First Called Session. The Contractor will be required to separate the charges for materials from all other charges and will be furnished an Exemption Certificate for each contract by the Department. Also, the Contractor must issue resale certificates to suppliers. Sales tax permit applications and information regarding resale certificates may be obtained by calling the State Comptrollers' toll fee number 1-800-252-5555.

Issued 10/29/91

SPECIAL PROVISION
No. 000-6233
IMPORTANT NOTICE TO CONTRACTORS

The Contractor's attention is directed to Rule 3.291, paragraphs (a) (1), defining separated contracts, subsection (b) (3) discussing separated contracts, and subsection (c) discussing exempt contracts. Reference: Texas Tax Code, Chapter 151.

Contractors should note those organizations in subsection (c) that the rule shows as being exempt no longer qualify for the exemption. The rule states that contractors improving realty for organizations listed in Texas Tax Code 151.309 and 151.310 are exempt from tax. THIS IS NO LONGER TRUE EFFECTIVE WITH CONTRACTS SIGNED ON OR AFTER AUGUST 15, 1991.

> Only those contracts with school districts and nonprofit hospitals qualify for the exemption discussed in subsection (c) of Rule 3.291.

The Comptroller is amending the rule to reflect this change.

If the low bidder elects to operate under a separated contract as defined by Rule 3.291, by obtaining the necessary permits from the State Comptroller's office allowing the purchase of materials for incorporation in this project without having to pay the Limited Sales and Use Tax at the time of purchase, the low bidder shall identify separately from all other charges the total agreed contract price for materials incorporated into the project. This form shall be filled out by the low bidder in each of the two bound copies of the contract. Total materials shall only include materials physically incorporated into the realty.

If the Contractor operates under a "separated contract", the Department will furnish the Contractor with an exemption certificate for the applicable materials.

In order to comply with the requirements of Rule 3.291, as mentioned above, it will be necessary for the Contractor to obtain a sales tax permit.

It will also be necessary that the contractor issue resale certificates to his suppliers.

Sales tax application for a sales tax permit and information regarding resale certificates may be obtained by writing to:

Comptroller of Public Accounts
Capital Station
Austin, Texas 78774

The Contractor may also receive information or request sales tax permit applications by calling the State Comptrollers' toll-free number 1-800-252-5555.

Subcontractors are eligible for sales tax exemption if the subcontract is made in such manner that the charges for materials is separated from all other charges. The procedure described above will affect a satisfactory separation. When subcontractors are handled in this manner, the Contractor must issue a resale certificate to the subcontractor and the subcontractor, in turn, must issue a resale certificate to his supplier.

STATEMENT OF MATERIALS AND OTHER CHARGES

Project Name:
West Laredo Multi-modal Trade Corridor – Phase II
(Flecha/Las Cruces Realignment Project)
CSJ: 0922-33-076

MATERIALS INCORPORATED INTO THE PROJECT: $_____

ALL OTHER CHARGES: $_____

*TOTAL: $_____

*This total must agree with the total figure shown in the Item and Quantity Sheets in the bound contract.

For purposes of complying with the Texas Tax Code, the Contractor agrees that the charges for any material incorporated into the project in excess of the estimated quantity provided for herein will be no less than the invoice price for such material to the Contractor.

NOTE: ONLY THE COPY OF THIS FORM IN THE BOUND CONTRACTS IS TO BE FILLED OUT.

Project Acceptance Requirements

Items required by The City of Laredo for Acceptance of the Project.

Project Name _____

Consultant _____

Contractor _____

Date _____

REQUIRED ITEMS	SUBMITTED		RESUBMIT	COMMENTS
	YES	N/A		
Completion of Punch List				
Engineers / Architects Completion Report				
Affidavit of Payments of Debts & Claims & Release of Liens from the Contractor.				
Warranty Letter from the Contractor to the City of Laredo				
Warranty Statement Form				
Certificate of Occupancy from Building Development Services				
Legal Description & Physical Address				
Reproducible Record Drawings				
Electronic Record Drawings (CD with PDF files /ACAD)				
Final Payment Request				

CITY OF LAREDO
CONTRACTOR'S APPLICATION FOR PAYMENT

PROJECT: West Laredo Multi-modal Trade Corridor – Phase II
(Flecha/Las Cruces Realignment Project)
CSJ: 0922-33-076

ESTIMATE NO.:
DATE FROM:
TO:

ORIGINAL CONTRACT:	TOTAL WORK TO DATE:	$
CHANGE ORDERS:	MATERIALS ON HAND:	$
	10% RETAINAGE:	$
TOTAL TO DATE:	PREVIOUS PAYMENTS:	$
% COMPLETE:	AMOUNT DUE:	$

CERTIFICATE OF CONTRACTOR:
I certify that all items and amounts shown on this request for partial payment are correct and that all work has been performed and/or materials supplied in full in accordance with the requirements on the contract documents.
(CONTRACTOR) By: _____
Signature Date

_____
Print Name

CERTIFICATE OF FIELD REPRESENTATIVE:
I have checked this request for partial payment against the notes and reports of my inspections of the project and in my opinion the statement of work performed and/or material supplied is accurate and that the contractor is observing the requirements of the contract documents.
(INSPECTOR) By:_____
Signature Date

_____
Print Name

CERTIFICATE OF ENGINEER:
I certify that I have checked and verified the above and foregoing request for partial payment and that it is a true and correct statement of work performed and/or material supplied by the contractor and that same has been performed and/or supplied in full accordance with the requirements of the contract documents.
(CONSULTANT) By:_____
Signature Date

_____
Print Name

RECOMMENDED FOR PAYMENT:

_____
Eliud De Los Santos, P.E, City Engineer
DATE: _____

VERIFIED FOR PAYMENT:

_____
Favio R. Rodriguez, P.E
DATE:

APPROVED FOR PAYMENT: DATE:

_____
Finance Department

AFFIDAVIT OF PAYMENT OF DEBTS AND CLAIMS
AND RELEASE OF LIENS

TO: CITY OF LAREDO
WEBB COUNTY, TEXAS

Project Name:
West Laredo Multi-modal Trade Corridor – Phase II
(Flecha/Las Cruces Realignment Project)
CSJ: 0922-33-076

By this instrument the undersigned contractor engaged in the construction of the above project certifies that on this date, or anytime prior thereto, except listed below, contractor has paid in full or has otherwise satisfied all obligations for all materials and for all known indebtedness and claims against the project, its land, improvements and equipment of every kind.

The undersigned hereby certifies that he has received all payments currently due under his contract for work on the project above referred. Therefore, the undersigned does hereby waive and/or release any and all liens against the property, project and as of the _____ day of _____, 2024.

_____
Company Name

STATE OF TEXAS:

COUNTY OF _____:

Before me, the undersigned authority, on this day personally appeared _____, known to me to be the person whose name is subscribed to the foregoing instrument, and being first duly sworn, acknowledge to me that he executed the same for the purposes and consideration therein expressed and declared to me that the statements therein are true.

SWORN AND SUBSCRIBED TO before me this _____ day of _____, _____.

NOTARY PUBLIC
MY COMMISSION EXPIRES:

MATERIALS ON HAND INVENTORY

Project:

Contractor: _____

Estimate No. _____ Dates: From _____ to _____

No.	Invoice No.	Vendor	Balance Last Period	Received Current	Placed Current	Balance

FORM LETTER FOR CERTIFICATE OF WARRANTY

DATE:

Mr. Eliud De Los Santos, P.E., City Engineer
City Engineer
City of Laredo
1110 Houston St.
Laredo, Texas 78040

Re:

Dear Mr. De Los Santos:
_____ guarantees all materials and workmanship on the above referred project to be free of defects for a period of one (1) year from the date of acceptance by the owner. Upon notice, any defective materials or faulty workmanship developing within this period, will be replace at no cost to the owner.

Sincerely,

_____
Company Name

ACKNOWLEDGEMENT

STATE OF TEXAS

COUNTY OF _____

Before me, Notary Public for and in _____ County, State of _____ on this personally appeared _____ known to me to be person(s) whose name(s) subscribed to the foregoing affidavit and acknowledge to me that he executed the same for the purpose and consideration expressed therein.

GIVEN UNDER MY HAND AND SEAL OF OFFICE, THIS _____ DAY OF
_____, _____.

_____
Notary Public in and for
_____ County, State of _____My Commission Expires:

FORM LETTER FOR ENGINEERING COMPLETION REPORT

DATE:

Mr. Eliud De Los Santos, P.E.,
City Engineer
1110 Houston Street
Laredo, Texas 78040

Re:

Dear Mr. De Los Santos:

In accordance with the contracts between_____ and The City of Laredo, Webb County, Texas, and pursuant to the specifications in the contract documents, I take this opportunity to file this Completion Report with reference to the above mentioned project as follows:

STATE OF _____

COUNTY OF _____

This is to Certify that I, _____Registered Professional Engineer, have inspected the work accomplished by _____ and, under contract with The City of Laredo, Webb County, Texas, found that workmanship and materials supplied are in accordance with plans and specifications for said project, and as amended by the "AS-BUILT" drawings.

SIGNED THIS THE _____ DAY OF _____, 2024.

_____
_____, P.E.

_____
P.E. SEAL

COVER PAGE

FOR

BID PROPOSAL

CITY OF LAREDO

West Laredo Multi-modal Trade Corridor – Phase II
(Flecha/Las Cruces Realignment Project)

Project No: DMO 2012 (628)
CSJ: 0922-33-076
BID ISSUE DATE: August 4, 2025

Required Submission of one original of the Bid Package Sheets from Section A-5 (20 pages)

Initial and date acknowledgement of :

Addenda (if any)
Wage Determination
Labor Provisions
Affirmative Action Programs
Child Support

SECTION A-5

BID PROPOSAL

To: The City of Laredo, Texas

Honorable Dr. Victor D. Treviño, Mayor

From: _____
Contractor

Address: _____
Phone: _____
Fax: _____

Project Name:
West Laredo Multi-modal Trade Corridor – Phase II
(Flecha/Las Cruces Realignment Project)
CSJ: 0922-33-076

pursuant to Notice to Bidders, the undersigned bidder hereby proposes to furnish the labor, materials, and equipment in accordance with the plans and specifications, general conditions of the agreement, special provisions of the Agreement, and Addenda, if any. The bidder binds himself upon acceptance of his proposal to execute a contract and bonds accompanying form of performing and completing the said work within the time stated as required by the detailed specifications at the following unit prices. The quantities shown below are based on the Engineer's estimate of quantities and it is agreed that the quantities may be increased or diminished, and may be considered necessary in the opinion of the City of Laredo, Texas to complete the work fully as planned and contemplated, and that all quantities of work, either increased or decreased, are to be performed at the unit prices set forth below (except as provided in the General Conditions of the Agreement or the specifications, the contract documents).

Acknowledgment of Addenda: (Please initial and date):

Addendum No. 1: _____
Addendum No. 2: _____
Addendum No. 3: _____
Addendum No. 4: _____
Addendum No. 5: _____
Acknowledgment of other documents: (Please initial and date):
Wage Determination: _____
Labor Provisions: _____
Affirmative Action Program: _____
Child Support Statement: _____

Project Name:
West Laredo Multi-modal Trade Corridor – Phase II
(Flecha/Las Cruces Realignment Project)
CSJ: 0922-33-076

Form of Non-Collusive Affidavit

A F F I D A V I T

STATE OF TEXAS {}
COUNTY OF WEBB {}

_____
being first duly sworn, deposes and says

That he is _____
(a Partner of Officer of the firm of, etc.)

the party making the foregoing proposal or bid, that such proposal or bid is genuine and not collusive or sham; that said Bidder has not colluded, conspired, connived or agreed, directly or indirectly, with any Bidder or Person, to put in a sham bid or to refrain from bidding, and has not in any manner, directly or indirectly, sought by agreement or collusion, or communication or conference, with any person, to fix the bid price or affiant or of any other Bidder or to fix any overhead, profit or cost element of said bid price, or of that of any other Bidder, or to secure any advantage against the City of Laredo or any person interested in the proposed Contract; and that all statements in said proposal or bid are true.

_____
Signature of (Print and Sign)

Bidder, if the Bidder is an individual
Partner, if the Bidder is a Partnership
Officer, if the Bidder is a Corporation

Subscribed and sworn before me this _____ day of _____, 20___.

_____
Notary Public

My Commission expires

_____

INFORMATON TO CONTRACTORS

Project Name:
West Laredo Multi-modal Trade Corridor – Phase II
(Flecha/Las Cruces Realignment Project)
CSJ: 0922-33-076

The Contractor's attention is directed to Special Provision 000-6233, "Important Notice to Contractors", and "Statement of Materials and Other Charges" which will be included in all projects, beginning with the September, 1991 letting. These establish the procedures whereby the Contractor will be permitted to obtain an exemption from the sales tax on certain materials. See Comptroller's Rule 3.291 and Texas Tax Code, Chapter 151, as amended by House Bill Number 11, acts 1991, 72nd Legislature, First Called Session. The Contractor will be required to separate the charges for materials from all other charges. Also, the Contractor must issue resale certificates to suppliers. Sales tax permit applications and information regarding resale certificates may be obtained by calling the State Comptrollers' toll fee number 1-800-252-5555.

SPECIAL PROVISION
No. 000-6233
IMPORTANT NOTICE TO CONTRACTORS

The Contractor's attention is directed to Rule 3.291, paragraphs (a) (1), defining separated contracts, subsection (b) (3) discussing separated contracts, and subsection (c) discussing exempt contracts. Reference: Texas Tax Code, Chapter 151.

Contractors should note those organizations in subsection (c) that the rule shows as being exempt no longer qualify for the exemption. The rule states that contractors improving realty for organizations listed in Texas Tax Code 151.309 and 151.310 are exempt from tax. THIS IS NO LONGER TRUE EFFECTIVE WITH CONTRACTS SIGNED ON OR AFTER AUGUST 15, 1991.

> Only those contracts with school districts and nonprofit hospitals qualify for the exemption discussed in subsection (c) of Rule 3.291.

The Comptroller is amending the rule to reflect this change.

If the low bidder elects to operate under a separated contract as defined by Rule 3.291, by obtaining the necessary permits from the State Comptroller's office allowing the purchase of materials for incorporation in this project without having to pay the Limited Sales and Use Tax at the time of purchase, the low bidder shall identify separately from all other charges the total agreed contract price for materials incorporated into the project. This form shall be filled out by the low bidder in each of the two bound copies of the contract. Total materials shall only include materials physically incorporated into the realty.

In order to comply with the requirements of Rule 3.291, as mentioned above, it will be necessary for the Contractor to obtain a sales tax permit.

It will also be necessary that the contractor issue resale certificates to his suppliers.

Sales tax application for a sales tax permit and information regarding resale certificates may be obtained by writing to:

> Comptroller of Public Accounts
> Capital Station
> Austin, Texas 78774

The Contractor may also receive information or request sales tax permit applications by calling the State Comptrollers' toll-free number 1-800-252-5555.

Subcontractors are eligible for sales tax exemption if the subcontract is made in such manner that the charges for materials is separated from all other charges. The procedure described above will affect a satisfactory separation. When subcontractors are handled in this manner, the Contractor must issue a resale certificate to the subcontractor and the subcontractor, in turn, must issue a resale certificate to his supplier.

STATEMENT OF MATERIALS AND OTHER CHARGES

Project Name:
West Laredo Multi-modal Trade Corridor – Phase II
(Flecha/Las Cruces Realignment Project)
CSJ: 0922-33-076

BASE BID

MATERIALS INCORPORATED INTO THE PROJECT: $_____

ALL OTHER CHARGES: $_____

*TOTAL: $_____

JOINT UTILITY BID

MATERIALS INCORPORATED INTO THE PROJECT: $_____

ALL OTHER CHARGES: $_____

*TOTAL: $_____

*This total must agree with the total figure shown in the Item and Quantity Sheets in the bound contract.

For purposes of complying with the Texas Tax Code, the Contractor agrees that the charges for any material incorporated into the project in excess of the estimated quantity provided for herein will be no less than the invoice price for such material to the Contractor.

NOTE: ONLY THE COPY OF THIS FORM IN THE BOUND CONTRACTS IS TO BE FILLED OUT.

INFORMATION FROM BIDDERS
MUST BE COMPLETED AND SUBMITTED WITH BID PROPOSAL

Project Name:
West Laredo Multi-modal Trade Corridor – Phase II
(Flecha/Las Cruces Realignment Project)
CSJ: 0922-33-076

Statement of Qualifications: (Similar Projects Completed by Bidder)

1. Name of Project: _____
   Value of Contract: _____
   Date Completed: _____
2. Name of Project: _____
   Value of Contract: _____
   Date Completed: _____
3. Name of Project: _____
   Value of Contract: _____
   Date Completed: _____

Experience Data: (Include name and experience record of the Superintendent)

Financial Status: A confidential financial statement will be submitted by the apparent successful low Bidder only if the Owner deems it necessary.

NOTE: <u>TO BE SUBMITTED UPON REQUEST</u>

IS NOT AN ACCEPTABLE ANSWER.

Project Name:
West Laredo Multi-modal Trade Corridor – Phase II
(Flecha/Las Cruces Realignment Project)
CSJ: 0922-33-076

Proposed Progress Schedules:

Data on Equipment to be used on the Work: (Include the number of machines, the type, capacity, age and conditions and location)

Subcontractors: (Submit a list of proposed Subcontractors. List sources, types and manufacturers of proposed materials)

NOTE: <u>TO BE SUBMITTED UPON REQUEST</u>

IS NOT AN ACCEPTABLE ANSWER.

Printed Name of Autorized Signer _____

Signature of Autorized Signer _____DATE_____

PROJECT : West Laredo Multi-modal Trade Corridor – Phase II
(Flecha/Las Cruces Realignment Project)
COUNTY : WEBB

PROPOSAL SHEET
TxDOT
FORM 234-B I-61-5M

ALT	ITEM - CODE			BASE BID UNIT BID PRICE ONLY. WRITTEN IN WORDS	UNIT	APPROX QUANTITIES	DEPT USE ONLY
	ITEM NO	DESC CODE	S.P. NO.				
	100	7002		PREPARING ROW DOLLARS and CENTS	STA	9.000	1
	104	7008		REMOVING CONC (MEDIANS) DOLLARS and CENTS	SY	460.000	2
	104	7011		REMOVING CONC (DRIVEWAYS) DOLLARS and CENTS	SY	904.000	3
	104	7016		REMOVING CONC (CURB) DOLLARS and CENTS	LF	597.000	4
	106	7002		OBLITERATING ABANDONED ROAD DOLLARS and CENTS	SY	2,425.000	5
	110	7001		EXCAVATION (ROADWAY) DOLLARS and CENTS	CY	483.000	6
	110	7002		EXCAVATION (CHANNEL) DOLLARS and CENTS	CY	2,661.000	7
	132	7002		EMBANK (FNL)(DC)(TY A) DOLLARS and CENTS	CY	3,983.000	8
	164	7021		HYDRO MULCH SEED (TEMP_WARM) DOLLARS and CENTS	SY	611.000	9
	164	7022		HYDRO MULCH SEED (TEMP_COOL) DOLLARS and CENTS	SY	611.000	10
	164	7009		DRILL SEED (PERM_RURAL_SAND) DOLLARS and CENTS	SY	2,142.000	11
	168	7001		VEGETATIVE WATERING DOLLARS and CENTS	TGL	247.000	12

Printed Name of Autorized Signer _____

Signature of Autorized Signer _____DATE_____

PROJECT : West Laredo Multi-modal Trade Corridor – Phase II
(Flecha/Las Cruces Realignment Project)
COUNTY : WEBB

PROPOSAL SHEET
TxDOT
FORM 234-B I-61-5M

ALT	ITEM - CODE			BASE BID UNIT BID PRICE ONLY. WRITTEN IN WORDS	UNIT	APPROX QUANTITIES	DEPT USE ONLY
	ITEM NO	DESC CODE	S.P. NO.				
	341	7001		D-GR HMA TY-B PG64-22 DOLLARS and CENTS	TON	5,137.000	13
	341	7037		D-GR HMA TY-C SAC-B PG70-22 (EXEMPT) DOLLARS and CENTS	TON	732.000	14
	400	7001		STRUCTURE EXCAVATION DOLLARS and CENTS	CY	4,125.000	15
	402	7001		TRENCH EXCAVATION PROTECTION DOLLARS and CENTS	LF	699.000	16
	403	7001		TEMPORARY SPL SHORING DOLLARS and CENTS	SF	1,460.000	17
	416	7046		DRILL SHAFT (TRF SIG POLE)(48 IN) DOLLARS and CENTS	LF	66.000	18
	420	7052		CL C CONC (RAIL FOUNDATION) DOLLARS and CENTS	CY	85.000	19
	432	7002		RIPRAP (CONC) (5 IN) DOLLARS and CENTS	CY	274.000	20
	432	7013		RIPRAP (MOW STRIP) (4 IN) DOLLARS and CENTS	CY	15.000	21
	432	7033		RIPRAP (STONE COMMON)(DRY) (18 IN) DOLLARS and CENTS	CY	35.000	22
	450	7030		RAIL (TY C1W) DOLLARS and CENTS	LF	469.000	23
	462	7035		CONC BOX CULV (10 FT X 7 FT) DOLLARS and CENTS	LF	910.000	24

Printed Name of Autorized Signer _____

Signature of Autorized Signer _____DATE_____

PROJECT : West Laredo Multi-modal Trade Corridor – Phase II
(Flecha/Las Cruces Realignment Project)
COUNTY : WEBB

PROPOSAL SHEET
TxDOT
FORM 234-B I-61-5M

ALT	ITEM - CODE			BASE BID UNIT BID PRICE ONLY. WRITTEN IN WORDS	UNIT	APPROX QUANTITIES	DEPT USE ONLY
	ITEM NO	DESC CODE	S.P. NO.				
	464	7005		RC PIPE (CL III) (24 IN) DOLLARS and CENTS	LF	300.000	25
	464	7011		RC PIPE (CL III) (48 IN) DOLLARS and CENTS	LF	326.000	26
	465	7011		JCTBOX (COMPL) (PJB) (6FTX6FT) DOLLARS and CENTS	EA	2.000	27
	465	7013		INLET (COMPL) (PCO) (3FT) (NONE) DOLLARS and CENTS	EA	1.000	28
	465	7016		INLET (COMPL) (PCO) (3FT) (BOTH) DOLLARS and CENTS	EA	2.000	29
	465	7021		INLET (COMPL) (PCO) (5FT) (NONE) DOLLARS and CENTS	EA	1.000	30
	465	9999		INLET (COMPL) (TRAFFIC) (TY X-5) DOLLARS and CENTS	EA	1.000	31
	466	7180		WINGWALL (PW - 1) (HW=10 FT) DOLLARS and CENTS	EA	1.000	32
	466	7181		WINGWALL (PW - 1) (HW=11 FT) DOLLARS and CENTS	EA	1.000	33
	496	7006		REMOV STR (HEADWALL) DOLLARS and CENTS	EA	2.000	34
	496	7007		REMOV STR (PIPE) DOLLARS and CENTS	LF	108.000	35
	500	7001		MOBILIZATION DOLLARS and CENTS	LS	1.000	36

Printed Name of Autorized Signer _____

Signature of Autorized Signer _____DATE_____

PROJECT : West Laredo Multi-modal Trade Corridor – Phase II
(Flecha/Las Cruces Realignment Project)
COUNTY : WEBB

PROPOSAL SHEET
TxDOT
FORM 234-B I-61-5M

ALT	ITEM - CODE			BASE BID UNIT BID PRICE ONLY. WRITTEN IN WORDS	UNIT	APPROX QUANTITIES	DEPT USE ONLY
	ITEM NO	DESC CODE	S.P. NO.				
	502	7001		BARRICADES, SIGNS AND TRAFFIC HANDLING DOLLARS and CENTS	MO	10.000	37
	503	7001		PORTABLE CHANGEABLE MESSAGE SIGN DOLLARS and CENTS	DAY	48.000	38
	506	7003	001	ROCK FILTER DAMS INSTALL (TY 3) DOLLARS and CENTS	LF	57.000	39
	506	7011	001	ROCK FILTER DAMS (REMOVE) DOLLARS and CENTS	LF	57.000	40
	506	7020	001	CONSTRUCTION EXITS (INSTALL)(TY I) DOLLARS and CENTS	SY	156.000	41
	506	7024	001	CONSTRUCTION EXITS (REMOVE) DOLLARS and CENTS	SY	156.000	42
	506	7039	001	TEMPORARY SEDIMENT CONTROL FENCE DOLLARS and CENTS	LF	751.000	43
	506	7041		TEMPORARY SEDIMENT CONTROL FENCE REMOVE DOLLARS and CENTS	LF	751.000	44
	512	7009		PORT CTB (FUR & INST)(LOW PROF) (TY 1) DOLLARS and CENTS	LF	200.000	45
	512	7010		PORT CTB (FUR & INST)(LOW PROF) (TY 2) DOLLARS and CENTS	LF	40.000	46
	512	7033		PORT CTB (MOVE)(LOW PROF) (TY 1) DOLLARS and CENTS	LF	400.000	47
	512	7034		PORT CTB (MOVE)(LOW PROF) (TY 2) DOLLARS and CENTS	LF	80.000	48

Printed Name of Autorized Signer _____

Signature of Autorized Signer _____DATE_____

PROJECT : West Laredo Multi-modal Trade Corridor – Phase II
(Flecha/Las Cruces Realignment Project)
COUNTY : WEBB

PROPOSAL SHEET
TxDOT
FORM 234-B I-61-5M

ALT	ITEM - CODE			BASE BID UNIT BID PRICE ONLY. WRITTEN IN WORDS	UNIT	APPROX QUANTITIES	DEPT USE ONLY
	ITEM NO	DESC CODE	S.P. NO.				
	512	7057		PORT CTB (REMOVE)(LOW PROF) (TY 1) DOLLARS and CENTS	LF	200.000	49
	512	7058		PORT CTB (REMOVE)(LOW PROF) (TY 2) DOLLARS and CENTS	LF	40.000	50
	528	7003		REMOVE AND RELAY PAVERS DOLLARS and CENTS	SY	153.000	51
	529	7002		CONC CURB (TY II) DOLLARS and CENTS	LF	420.000	52
	529	7009		CONC CURB & GUTTER (TY II) DOLLARS and CENTS	LF	2,138.000	53
	529	9999		CONC CURB (TY B) MOUNTABLE DOLLARS and CENTS	LF	276.000	54
	530	7006		DRIVEWAYS (CONC) DOLLARS and CENTS	SY	422.000	55
	530	7010		DRIVEWAYS (ACP) DOLLARS and CENTS	SY	317.000	56
	531	7001		CONC SIDEWALKS (4") DOLLARS and CENTS	SY	1,023.000	57
	531	7010		CURB RAMPS (TY 7) DOLLARS and CENTS	EA	3.000	58
	540	7003		MTL THRIE-BEAM GD FEN (TIM POST) DOLLARS and CENTS	LF	112.500	59
	540	7005		MTL BEAM GD FEN TRANS (THRIE-BEAM) DOLLARS and CENTS	EA	3.000	60

Printed Name of Autorized Signer _____

Signature of Autorized Signer _____DATE_____

PROJECT : West Laredo Multi-modal Trade Corridor – Phase II
(Flecha/Las Cruces Realignment Project)
COUNTY : WEBB

PROPOSAL SHEET
TxDOT
FORM 234-B I-61-5M

ALT	ITEM - CODE			BASE BID UNIT BID PRICE ONLY. WRITTEN IN WORDS	UNIT	APPROX QUANTITIES	DEPT USE ONLY
	ITEM NO	DESC CODE	S.P. NO.				
	540	7015		DOWNSTREAM ANCHOR TERMINAL SECTION DOLLARS and CENTS	EA	1.000	61
	540	7016		MTL BM GD FEN TRANS (NON - SYM) DOLLARS and CENTS	EA	1.000	62
	544	7001		GUARDRAIL END TREATMENT (INSTALL) DOLLARS and CENTS	EA	2.000	63
	545	7010		CRASH CUSH ATTEN (INSTL)(R)(N)(TL3) DOLLARS and CENTS	EA	1.000	64
	618	7030		CONDT (PVC) (SCH 40) (2") DOLLARS and CENTS	LF	140.000	65
	618	7040		CONDT (PVC) (SCH 40) (4") DOLLARS and CENTS	LF	617.000	66
	618	7055		CONDT (PVC) (SCH 80) (2") (BORE) DOLLARS and CENTS	LF	450.000	67
	618	7065		CONDT (PVC) (SCH 80) (4") (BORE) DOLLARS and CENTS	LF	620.000	68
	620	7009		ELECTRICAL CONDUCTOR (NO. 6) BARE DOLLARS and CENTS	LF	1,450.000	69
	620	7010		ELECTRICAL CONDUCTOR (NO. 6) INSULATED DOLLARS and CENTS	LF	120.000	70
	621	7006		TRAY CABLE (4 CONDR) (12 AWG) DOLLARS and CENTS	LF	1,040.000	71
	624	7008		GROUND BOX TY D (162922) W/APRON DOLLARS and CENTS	EA	3.000	72

Printed Name of Autorized Signer _____

Signature of Autorized Signer _____DATE_____

PROJECT : West Laredo Multi-modal Trade Corridor – Phase II
(Flecha/Las Cruces Realignment Project)
COUNTY : WEBB

PROPOSAL SHEET
TxDOT
FORM 234-B I-61-5M

ALT	ITEM - CODE			BASE BID UNIT BID PRICE ONLY. WRITTEN IN WORDS	UNIT	APPROX QUANTITIES	DEPT USE ONLY
	ITEM NO	DESC CODE	S.P. NO.				
	636	7001		ALUMINUM SIGNS (TY A) DOLLARS and CENTS	SF	6.560	73
	644	7001		IN SM RD SN SUP & AM TY10BWG (1) SA (P) DOLLARS and CENTS	EA	14.000	74
	644	7073		REMOVE SM RD SN SUP & AM DOLLARS and CENTS	EA	9.000	75
	666	7018		REFL PAV MRK TY I (W) 8" (DOT) (100MIL) DOLLARS and CENTS	LF	86.000	76
	666	7024		REFL PAV MRK TY I (W) 8" (SLD) (100MIL) DOLLARS and CENTS	LF	931.000	77
	666	7036		REFL PAV MRK TY I (W) 24" (SLD) (100MIL) DOLLARS and CENTS	LF	188.000	78
	666	7042		REFL PAV MRK TY I (W) (ARROW) (100MIL) DOLLARS and CENTS	EA	7.000	79
	666	7045		REFL PAV MRK TY I (W) (DBL ARROW) (100MIL) DOLLARS and CENTS	EA	3.000	80
	666	7066		REFL PAV MRK TY I (W) (WORD) (100MIL) DOLLARS and CENTS	EA	5.000	81
	666	7123		REFL PAV MRK TY I (Y) 24" (SLD) (100MIL) DOLLARS and CENTS	LF	153.000	82
	666	7132		REFL PAV MRK TY I (Y) (MED NOSE) (100MIL) DOLLARS and CENTS	EA	2.000	83
	666	7411		REFL PAV MRK TY I (W) 6" (SLD) (100MIL) DOLLARS and CENTS	LF	1,792.000	84

Printed Name of Autorized Signer _____

Signature of Autorized Signer _____DATE_____

PROJECT : West Laredo Multi-modal Trade Corridor – Phase II
(Flecha/Las Cruces Realignment Project)
COUNTY : WEBB

PROPOSAL SHEET
TxDOT
FORM 234-B I-61-5M

ALT	ITEM - CODE			BASE BID UNIT BID PRICE ONLY. WRITTEN IN WORDS	UNIT	APPROX QUANTITIES	DEPT USE ONLY
	ITEM NO	DESC CODE	S.P. NO.				
	666	7420		REFL PAV MRK TY I (Y) 6" (BRK) (100MIL) DOLLARS and CENTS	LF	100.000	85
	666	7423		REFL PAV MRK TY I (Y) 6" (SLD) (100MIL) DOLLARS and CENTS	LF	4,490.000	86
	672	7002		REFL PAV MRKR TY I-C DOLLARS and CENTS	EA	43.000	87
	672	7004		REFL PAV MRKR TY II-A-A DOLLARS and CENTS	EA	151.000	88
	680	7002		INSTALL HWY TRF SIG (ISOLATED) DOLLARS and CENTS	EA	1.000	89
	680	7004		REMOVING TRAFFIC SIGNALS DOLLARS and CENTS	EA	1.000	90
	681	7001		TEMP TRAF SIGNALS DOLLARS and CENTS	EA	1.000	91
	682	7001		VEH SIG SEC (12IN) LED (GRN) DOLLARS and CENTS	EA	12.000	92
	682	7002		VEH SIG SEC (12IN) LED (GRN ARW) DOLLARS and CENTS	EA	4.000	93
	682	7003		VEH SIG SEC (12IN) LED (YEL) DOLLARS and CENTS	EA	12.000	94
	682	7004		VEH SIG SEC (12IN) LED (YEL ARW) DOLLARS and CENTS	EA	8.000	95
	682	7005		VEH SIG SEC (12IN) LED (RED) DOLLARS and CENTS	EA	12.000	96

Printed Name of Autorized Signer _____

Signature of Autorized Signer _____DATE_____

PROJECT : West Laredo Multi-modal Trade Corridor – Phase II
(Flecha/Las Cruces Realignment Project)
COUNTY : WEBB

PROPOSAL SHEET
TxDOT
FORM 234-B I-61-5M

ALT	ITEM - CODE			BASE BID UNIT BID PRICE ONLY. WRITTEN IN WORDS	UNIT	APPROX QUANTITIES	DEPT USE ONLY
	ITEM NO	DESC CODE	S.P. NO.				
	682	7006		VEH SIG SEC (12IN) LED (RED ARW) DOLLARS and CENTS	EA	4.000	97
	682	7018		PED SIG SEC (LED) (COUNTDOWN) DOLLARS and CENTS	EA	6.000	98
	682	7042		BACKPLATE W/REF BRDR (3SEC) (VENT) ALUM DOLLARS and CENTS	EA	12.000	99
	682	7043		BACKPLATE W/REF BRDR (4SEC) (VENT) ALUM DOLLARS and CENTS	EA	4.000	100
	684	7009		TRF SIG CBL (TY A)(12 AWG) (4 CONDR) DOLLARS and CENTS	LF	1,465.000	101
	684	7010		TRF SIG CBL (TY A) (12AWG) (5 CONDR) DOLLARS and CENTS	LF	600.000	102
	684	7012		TRF SIG CBL (TY A) (12AWG) (7 CONDR) DOLLARS and CENTS	LF	1,095.000	103
	684	7014		TRF SIG CBL (TY A) (12AWG) (9 CONDR) DOLLARS and CENTS	LF	805.000	104
	684	7028		TRF SIG CBL (TY A) (14AWG) (2 CONDR) DOLLARS and CENTS	LF	1,310.000	105
	686	7063		INS TRF SIG PL AM (S) 1 ARM (60') LUM DOLLARS and CENTS	EA	2.000	106
	686	7067		INS TRF SIG PL AM (S) 1 ARM (65') LUM DOLLARS and CENTS	EA	1.000	107
	687	7001		PED POLE ASSEMBLY DOLLARS and CENTS	EA	3.000	108

Printed Name of Autorized Signer _____

Signature of Autorized Signer _____DATE_____

PROJECT : West Laredo Multi-modal Trade Corridor – Phase II
(Flecha/Las Cruces Realignment Project)
COUNTY : WEBB

PROPOSAL SHEET
TxDOT
FORM 234-B I-61-5M

ALT	ITEM - CODE			BASE BID UNIT BID PRICE ONLY. WRITTEN IN WORDS	UNIT	APPROX QUANTITIES	DEPT USE ONLY
	ITEM NO	DESC CODE	S.P. NO.				
	688	7001		PED DETECT PUSH BUTTON (APS) DOLLARS and CENTS	EA	7.000	109
	688	7003		PED DETECTOR CONTROLLER UNIT DOLLARS and CENTS	EA	1.000	110
	3007	7001		BONDING COURSE DOLLARS and CENTS	GAL	500.000	111
	6009	9999		ITS SYSTEM INTERGRATION DOLLARS and CENTS	LS	1.000	112

Printed Name of Autorized Signer _____

Signature of Autorized Signer _____DATE_____

PROJECT : West Laredo Multi-modal Trade Corridor – Phase II
(Flecha/Las Cruces Realignment Project)
COUNTY : WEBB

PROPOSAL SHEET
TxDOT
FORM 234-B I-61-5M

ALT	ITEM - CODE			JOINT UTILITY BID UNIT BID PRICE ONLY. WRITTEN IN WORDS	UNIT	APPROX QUANTITIES	DEPT USE ONLY
	ITEM NO	DESC CODE	S.P. NO.				
	104	.01		8" WATER LINE (PVC C900 DR-14) DOLLARS and CENTS	LF	95.000	113
	104	.02		8" 45 DEGREE BEND DOLLARS and CENTS	EA	4.000	114
	128	.01		REMOVE/DISPOSE 8" WATER LINE (DI) DOLLARS and CENTS	LF	95.000	115
	132	.01		8" DI to PVC TRANSITION COUPLING DOLLARS and CENTS	EA	2.000	116

_____
Contractor

_____
Signature Title

_____
Address City/State Zip Code

Telephone Number:(___)_____

Fax Number:(___)_____

Date:_____

NOTE 1: ALL BID ITEMS WILL BE PAID FOR WHEN COMPLETE IN PLACE, TESTED, AND ACCEPTED BY THE OWNER.

NOTE 2: THE CITY OF LAREDO RESERVES THE RIGHT TO AWARD THE BASE BID OR ANY OF THE ALTNERATE BIDS LISTED ABOVE TO REJECT ALL BIDS IF FUNDINGS IS NOT AVAILABLE.

BID BOND

Project Name:
West Laredo Multi-modal Trade Corridor – Phase II
(Flecha/Las Cruces Realignment Project)
CSJ: 0922-33-076

KNOW ALL MEN BY THESE PRESENTS, that we, the undersigned

_____

_____

as Principal, and _____ as
Surety, are hereby held and firmly bound unto

_____

as Owner in the penal sum of _____
for payment of which, well and truly to be made, we hereby jointly a severally bid ourselves, our heirs, executors, administrations, successors and assigns.

Signed, this _____ day of _____, 20___.

The condition of the above obligation is such that whereas the Principal has submitted to

_____ a certain Bid,
attached hereto and hereby made a part hereof to enter into a Contract in writing for the

_____

_____

NOW, THEREFORE,

(a) If said Bid shall be rejected, or in the alternate,
(b) If said Bid shall be accepted and the Principal shall execute and deliver a Contract in the Form of Contract attached hereto (properly completed in accordance with said Bid) and shall furnish a bond for his faithful performance of said Contract, and for the payment of all persons performing labor or furnishing materials in connection therewith, and shall in all other respects perform the Agreement created by the acceptance of said Bid,

then this obligation shall be void, otherwise the same shall remain in force and effect; it being expressly understood and agreed that the liability of the Surety for any and all claims hereunder shall, in no event, exceed the penal amount of this obligation as herein stated.

The Surety, for value received, hereby stipulates and agrees that he obligations of said Surety, and its bonds shall be in no way impaired or affected by any extension of the time within which the Owner may accept such Bid; and said Surety does hereby waive notice of any such extension.

IN WITNESS WHEREOF, the Principal and the Surety have hereunto set their hands and seals and such of them as are corporations have caused their corporate seals to be hereto affixed and these presents to be signed by their proper officers, the day and year first set fourth herein.

_____ (L.S.)
Principal (Print and Sign)

_____
Surety

By: _____

SECTION A-6

CHECKLIST FOR BIDDERS

Project Name:
West Laredo Multi-modal Trade Corridor – Phase II
(Flecha/Las Cruces Realignment Project)
CSJ: 0922-33-076

All information required by the terms of the Bid Documents must be furnished. **MISTAKES OR OMISSIONS CAN BE COSTLY AND CAN RESULT IN THE REJECTION OF YOUR BID.** Important items for you to check are included in but not limited to, those listed below. This checklist is furnished only to assist you in submitting a proper bid. Check as you read. **DO NOT INCLUDE THIS CHECKLIST WITH YOUR BID.**

[ ] Have you acknowledged receipt of all addenda to the plans and specifications?

[ ] Is your bid properly signed? (Refer to Bid Documents)

[ ] If a bid guarantee is required, is it included in your bid? (A late bid guarantee is treated the same as a late bid)

[ ] Is your bid guarantee in the proper amount? (Usually 5% of total bid price)

[ ] Your bid guarantee must be in the form of a Bidder's Bond, a Certified Check or Cashier's Check.

[ ] If your bid guarantee is in the form of a Bidder's Bond, is the bond properly signed by both the bidder and surety and are all required seals affixed?

[ ] Is the surety company qualified and licensed by the State of Texas as required by the provisions of the bid documents?

[ ] Is the name in which you submitted the bid the same on your bid proposal as on the Bidder's Bond?

[ ] If required have you entered a unit price for each bid item?

[ ] If required have you entered the unit price or lump sum price in both words and figures? (Unit Price or Lump Sum price in words govern)

[ ] Are decimals in unit prices in the proper places? Are your figures legible?

[ ] Are the extensions of your unit prices, and your total bid price correct?

[ ] Is proposal being submitted complete together with Information from Bidders?

[ ] Are all erasures or corrections initialized by the person signing the bid or by an authorized representative of the person signing the bid.

[ ] Do not restrict your bid by altering any provisions of the Bid Document or by attaching any documents to the Proposal that takes exception to the Bid Documents.

[ ] Have you included all pages of the Proposal with your bid? Are all blanks in the Proposal properly completed (equipment brands, alternate materials, etc.)?

[ ] Have you included Child Support Statement and form requirements with your bid?

[ ] Is the envelope containing your bid properly identified that it is a sealed bid and does it contain the correct project name and bid opening date?

[ ] Will your bid arrive on time? Late bids will not be considered (Item 2L) Generally, bids must be received by the City Secretary, City Hall on the date and time specified in the Notice to Bidders. (Other times or dates will be clearly specified in the Notice).

[ ] **On Federally Funded Projects, contractor must submit certified weekly payrolls with a copy to City Engineering Files.**

SECTION A-7

CONSTRUCTION CONTRACT

Project Name:
West Laredo Multi-modal Trade Corridor – Phase II
(Flecha/Las Cruces Realignment Project)
CSJ: 0922-33-076

Agenda Item:

STATE OF TEXAS
COUNTY OF WEBB

THIS AGREEMENT, made this _____ **day of** _____ **20__,** by and between the City of Laredo, Texas, acting by and through its duly authorized City Manager hereinafter termed the Owner, and _____**,** of the City of _____**,** County of _____, State of _____**,** his/their executors, administrators, heirs, successors, or assigns, hereinafter termed the Contractor.

WHEREAS, the Owner desired to enter into Contract for the _____ in accordance with the provisions of the Invitation for Bids, the Specifications and Plans titled as above, and published by City of Laredo, Texas, 1110 Houston Street, (mailing address: P.O. Box 579), Laredo, Texas 78040 all of which are a part thereof; and,

WHEREAS, the Contractor has been engaged in and now does such work and represents that he is fully equipped, competent and capable to perform the above desired and outlined work, and is ready and willing to perform the work in accordance with the provisions of the Invitation for Bids, the Specifications and Plans, titled, "_____"

WITNESS:

THAT for and in consideration of the payments and agreements hereinafter mentioned to be made and performed by the Owner, the Contractor hereby agrees at the unit price set forth in his Bid, made a part thereof totaling the sum of _____**($**_____**)** based on the Engineer's estimate of quantities, payable in the manner set out in Item 9L, General Provisions of the contractual Documents to commence and complete the _____ in the City of Laredo, Tx, in accordance with Instructions to Bidders, Special Provisions, General Provisions, Technical Provisions, and all other requirements of the contractual Documents, and in accordance with the Specifications and Plans (including all maps, plats, blueprints, and other drawings and printed or written explanatory matter thereof) prepared by the Owner's Engineer, a part thereof and collectively, together with this Agreement constitute the entire Contract; and the Contractor agrees to furnish all the materials, supplies, machinery, equipment, tools, superintendence, labor, bonds, insurance and other accessories and services, and whatever else may be necessary to complete the said construction in accordance with said specifications, plans, and other contractual documents including such proposal.

Project Name:
West Laredo Multi-modal Trade Corridor – Phase II
(Flecha/Las Cruces Realignment Project)
CSJ: 0922-33-076

Said Contractor further agrees to begin the work on or before the tenth day following the date set by the Owner in the written notice to proceed and to complete the work within _____.
The Contractor further agrees to pay the sum of $_____ for each consecutive day there-in-after as herein provided in **Division B, Section 1.**

And the Owner in consideration of the full and true performance of the said work by said Contractor hereby agrees to and binds itself to pay the said Contractor the unit price set forth in the attached Bid, and in the manner provided in the Specifications.

IN WITNESS WHEREOF, the OWNER AND THE CONTRACTOR have hereunto set their hand this_____ **day of _____, 20__.**

WITNESS:

_____
Signature

_____
(Print)

_____
Address

Contractor/Firm (Signature)

_____
Signature

_____
(Print)
Title: _____

_____
Address

_____
City/State/Zip Code

_____
Telephone Number:

_____
Fax Number

_____
E-mail address

ATTEST:

_____
Mario Maldonado, Jr.
City Secretary

CITY OF LAREDO, TEXAS

_____
Joseph Neeb
City Manager

APPROVED AS TO FORM:

_____
City Attorney

Section A-8

CITY OF LAREDO
INSURANCE PROVISIONS AND LIMITS

Contractor shall provide and continuously maintain the minimum insurance coverages set forth below during the term of its agreement with the City of Laredo; and Contractor shall require its subcontractors to purchase the same types and amounts of insurance, at a minimum, as set forth below with respect to statutory workers' compensation and liability insurance.

1. Commercial general liability standard ISO insurance at minimum combined single limits of $1,000,000 per-occurrence and $2,000,000 general aggregate for bodily injury and property damage, which coverage shall include: products/completed operations ($2,000,000 products/completed operations aggregate); XCU (explosion, collapse, underground) hazards; and contractual liability. Without limitation, the commercial general liability coverage must cover all operations required in the contract, as well as contractual liability for the indemnity obligations assumed by the Contractor in the contract. Coverage must be written on an occurrence form.

2. Workers' compensation insurance at statutory limits, including employers' liability coverage at minimum limits of $1,000,000 each-occurrence, each accident/$1,000,000 by disease each-occurrence/$1,000,000 by disease aggregate.

3. Commercial automobile liability insurance at a minimum combined single limit of $1,000,000 per-occurrence for bodily injury and property damage, including non-owned and hired car coverage and owned vehicles if any are owned.

4. Umbrella liability or following-form excess liability at minimum limits, reference page four for project costs over $1,000,000. Coverage must be at least as broad as the underlying commercial general liability, auto liability, and employer's liability.

5. Pollution Legal Liability if applicable:
   a. Project costs of $1,000,000 to $10,000,000 and over $10,000,000; reference page four for limits.
   b. Contractors Pollution Liability:
      - Applies to operations that include the use, application, or consumption of pollutants.
      - Retro date shall not be later than the inception date of contract.
      - Contractual liability coverage to be included in contractor's pollution liability coverage.
   c. Environmental Liability:
      i. Applies to asbestos and removal of other hazardous materials and/or repair, maintenance, installation, construction operations that are high hazard.
      - $5,000,000 per- claim/$10,000,000 aggregate minimum.
      - Retro date shall not be later than the inception date of contract.
      - Contractual liability coverage to be included in contractor's pollution liability coverage.
      - At a minimum, coverage must apply to on-premises and transit operations.

6. Professional liability applies to professional services which include but are not limited to design build contractors, engineers, and architects at minimum limits of $1,000,000 per-clairn/$2,000,000 annual aggregate. The retro date shall not be later than the inception date of the contract. Reference page four for limits based on project cost.

7. Builders Risk if applicable:

   a. "All-risk" including collapse, flood, and earthquake, to be written on completed value form.
   b. Coverage to include limits of at least $250,000 for off-premises storage and transit of construction materials. Soft costs to be included at a minimum limit of $500,000.
   c. Thirty (30)-day occupancy clause to apply.
   d. No testing exclusion should apply.

With reference to the foregoing insurance requirements, Contractor shall specifically endorse applicable insurance policies as follows:

1. City of Laredo shall be named as an additional insured on a primary and non-contributory basis, regardless of the application of other insurance, with respect to all liability coverages, except for the professional liability and workers' compensation.

2. All liability policies shall contain no cross-liability exclusions or insured versus insured restrictions.

3. A waiver of subrogation in favor of City of Laredo shall be contained in all policies.

4. All insurance policies shall be endorsed to require the insurer to immediately notify City of Laredo of any material change in the insurance coverage.

5. All insurance policies shall be endorsed to the effect that City of Laredo will receive at least thirty (30) days' notice prior to cancellation or non-renewal of the insurance.

6. The additional insured coverage in the CGL policy in favor of City of Laredo must apply to the ongoing operations of Contractor for contract costs or up to $1,000,000 and expanded to include product s/completed operation for contract costs in excess of $1,000,000.

7. Required limits may be satisfied by any combination of primary and umbrella/excess liability insurances.

8. Contractor may maintain reasonable and customary deductibles, subject to approval by City of Laredo.

9. Insurance must be purchased from insurers that are financially acceptable to City of Laredo with a minimum *A.M Best* financial rating of A-:VII.

10. Coverage for commercial general liability, professional liability, and pollution legal liability must be maintained for at least one (I) to two (2) years after the project is completed.

11. For project s in excess of $10,000,000 in cost, a per-project aggregate limit must be included in the commercial general liability.

All insurance must be written on standard ISO or equivalent forms. Certificates of insurance shall be prepared and executed by the insurance company, or its authorized agent, shall be furnished to City of Laredo within five (5) business days of being notified of the award of the contract, and shall contain provisions representing and warranting the following:

Shall set forth all endorsements and insurance coverages according to requirements and instructions contained herein.

Shall specifically set forth the notice-of-cancellation or termination provisions to City of Laredo.

Copies of all required endorsements must be attached to the certificate of insurance. The certificates of insurance must be updated and resubmitted to the City of Laredo to show renewal coverages, as applicable, at least thirty (30) days prior to expiration of any one or more policies.

Upon request, Contractor shall furnish City of Laredo with certified copies of all insurance policies.

All of the above insurance provisions and limits are the minimum requirements, as referenced, and may be modified at the sole discretion of the City of Laredo.

BONDS

Bonds are required for public works contracts under the following circumstance:

1. A Bid or Proposal Bond is required in the amount of the bid submitted to the City of Laredo.
2. Performance Bond when the contract is in excess of $100,000, in a personal sum equal to 100% of the contract cost.
3. Payment or Labor and Material Bond when a contract is in excess of $50,000, each in a personal sum equal to 100% of the contract cost.

CITY OF LAREDO
INSURANCE PROVISIONS AND LIMITS

CONTRACT COST	TYPE OF INSURANCE	LIMITS
Less than $1,000,000	Umbrella Liability Professional Liability	Not Required $1,000,000 Per-Claim/ $2,000,000 Aggregate
$1,000,000 to $5,000,000	Umbrella Liability Professional Liability	$4,000,000 Per-Occ $1,500,000 Per·Claim/ $3,000,000 Aggregate
$5,000,000 to $10,000,000	Umbrella Liability Professional Liability	$9,000,000 to $10,000,000 Per-Occ $1,500,000 Per-Claim/ $3,000,000 Aggregate to $2,000,000 Per· Claim/$4,000,000 Aggregate
Over $10,000,000	Umbrella Liability Professional Liability	$10,000,000 or Higher $2,000,000 Per-Claim/ $4,000,000 Aggregate or Higher
$1,000,000 to $10,000,000	Contractor's Pollution Legal Liability	$1,000,000 Per-Claim/ $2,000,000 Aggregate
Over $10,000,000	Contractor's Pollution Legal Liability	$2,000,000 Per-Claim/ $4,000,000 Aggregate
	TAIL COVERAGE	
$1,000,000 to $5,000,000	Commercial General Liability, Professional Liability, and Pollution Legal Liability	One (1) Year
Over $5,000,000	Commercial General Liability, Professional Liability, and Pollution Legal Liability	Two (2) Years
Any Contract Size	Hazardous Environmental Work	Two (2) Years

SECTION A-9
PERFORMANCE BOND

(As required by Chapter 2253, Texas Government Code)

THE STATE OF {}
COUNTY OF {}

KNOW ALL MEN BY THESE PRESENTS: That we (1)_____
_____ a (2) _____
_____ of hereafter called Principal and (3) _____
_____of _____, State of _____
_____, hereinafter called the Surety, are held and firmly bound unto (4) ____
_____ of _____
hereinafter called Owner, in the penal sum of _____
_____ ($_____)
Dollars in lawful money of the United Stated, to be paid in (5)

WEBB COUNTY, TEXAS

_____ for the payment of which sum well and truly to be made, we bind ourselves, our heirs, executors, administrators and successors, jointly and severally, firmly by these presents.

THE CONDITIONS OF THIS OBLIGATION is such that Whereas, the Principal entered into a certain Contract with (6) _____
the Owner, dated the _____ day of _____ a copy of which is hereto attached and made a part hereof for the Construction of:

_____

_____

_____
(hereinafter called the "Work")

These notes refer to the numbers in body of Contract above:

Date of Bond must not be prior to Date of Contract.

(1) Correct name of Contractor.
(2) A Corporation, or Partnership or an Individual, as case may be.

(3) Correct name of Surety.
(4) Correct name of Owner.
(5) County and State.
(6) Owner.

NOW THEREFORE, if the Principals shall well, truly and faithfully perform the work in accordance with the Plans, Specifications and Contract Documents during the original term thereof, and any extensions thereof which may be granted by the Owner with or without notice to the Surety, and if he shall satisfy all claims and demands incurred under such Contract, and shall fully indemnify and save harmless the Owner from all costs and damages which it may suffer by reason of failure to do so, and shall reimburse and repay the owner all outlay and expense which the Owner may incur in making good any default, then this obligation shall be void; otherwise to remain in full force and effect.

PROVIDED FURTHER, that if any legal action be filed upon this Bond, venue shall lie WEBB County, State of Texas, and that the said surety, for value received hereby stipulates and agrees that no change, extension of time, alteration or addition to the terms of the Contract or to the work to be performed thereunder or the Specifications accompanying the same shall in any wise affect its obligation on this Bond, and it does hereby waive notice of any such change, extension of time, alteration or addition to the terms of the Contract or to the work or to the Specifications.

IN WITNESS WHEREOF, this Instrument is executed in six counterparts, each one of which shall be deemed an original, this the _____ day of _____.

ATTEST:

_____
(Principal) Secretary
(Print and Sign)

_____
PRINCIPAL (Print and Sign)

By:_____

(SEAL)

_____
Address (State and Zip Code)

_____
Witness as to Principal (Print and Sign)

_____
Telephone Number

_____
Address (State and Zip Code)

ATTEST:

_____
Secretary (Print and Sign)

(SEAL)

_____
(Surety) Secretary

(SEAL)

_____
Witness as to Surety (Print and Sign)

_____
Address (State and Zip Code)

SURETY: (Surety)

By: _____
(Print and Sign)

_____
Address (State and Zip Code)

_____
Telephone No. (Area Code)

PAYMENT BOND

(As required by Chapter 2253, Texas Government Code)

THE STATE OF {}
COUNTY OF {}

KNOW ALL MEN BY THESE PRESENTS: That we (1) _____
_____(2) _____
of _____hereinafter called Principal and (3) _____
of _____, State of _____, hereinafter called
the Surety, are held and firmly bound unto (4) _____of
_____ hereinafter called Owner, and unto all
Persons, Firms, and Corporations who may furnish materials for, or perform labor upon
the building or improvements hereinafter referred to in the penal sum of _____
_____ ($_____)
Dollars in lawful money of the United Stated, to be paid in (5) WEBB COUNTY, TEXAS for the payment of which sum well and truly to be made, we bind ourselves, our heirs, executors, administrators and successors, jointly and severally, firmly by these presents.

THE CONDITIONS OF THIS OBLIGATION is such that Whereas, the Principal entered into a certain Contract with (6) _____
the Owner, dated the _____ day of _____ a copy
of which is hereto attached and made a part hereof for the construction of:

_____

_____
(hereinafter called the "Work")

These footnotes refer to the numbers in body of contract above:

Date of Bond must not be prior to Date of Contract.

(1) Correct name of Contractor.
(2) A Corporation, or Partnership or an Individual, as case may be.
(3) Correct name of Surety.
(4) Correct name of Owner.
(5) County and State.
(6) Owner.

NOW THEREFORE, if the Principals shall well, truly and faithfully perform the work in accordance with the Plans, Specifications and Contract Documents during the original term thereof, and any extensions thereof which may be granted by the Owner with or without notice to the Surety, and if he shall satisfy all claims and demands incurred under such Contract, then this obligation shall be null and void; otherwise to remain in full force and effect.

This Bond is made and entered into solely for the protection of all claimants supplying labor and material in the prosecution of the work provided for in said Contract, and all such claimants shall have a direct right of action under the Bond as provided in Section 2253.073, Texas Government Code.

PROVIDED FURTHER, that if any legal action be filed upon this Bond, venue shall lie WEBB County, State of Texas, and that no change, extension of time, alteration or addition to the terms of the Contract or to the work to be performed thereunder or the Specifications accompanying the same shall in any wise affect its obligation on this Bond, and it does hereby waive notice of any such change, extension of time, alteration or addition to the terms of the Contract or to the work or to the Specifications.

PROVIDED FURTHER, that no final settlement between the Owner and the Contractor shall abridge the right of any beneficiary hereunder, whose claim may be unsatisfied.

IN WITNESS WHEREOF, this instrument is executed in six counterparts, each one of which shall be deemed an original, this the _____ day of _____.

ATTEST:

_____	_____
(Principal) Secretary (Print and Sign)	PRINCIPAL (Print and Sign)
	By: _____
(SEAL)	_____
	Address (State and Zip Code)
_____	_____
Witness as to Principal (Print and Sign)	Telephone Number
_____	
(SEAL)	
	_____
	Surety

ATTEST:

_____
(Surety Secretary) (Print and Sign)

(SEAL)

By:_____
(Print and Sign)

_____
Address (State and Zip Code)

_____
Telephone Number

NOTE: If Contractor is Partnership, all Partners should execute Bond.

PERFORMANCE - PAYMENT BOND FORM
M-24, 25, Attach. Sa

_____	_____ (SEAL)
Business (Print)	Individual Principal (Print and Sign)
_____	_____
Address (State and Zip Code)	Business - Address
_____	_____
Telephone Number (Area Code)	Telephone Number (Area Code)
ATTEST:	_____
	Corporate Principal
_____	
(Print and Sign)	
_____	_____
(State and Zip Code)	Business Address Name
	_____
	Telephone Number (Area Code)
_____	_____
Address (State and Zip Code)	(Affix Corporate Seal)
	By: _____
	(Sign and Print)
	_____
ATTEST:	Address (State and Zip Code)
_____	_____
(Print and Sign)	Corporate Surety
_____	
	_____
	Business Address
	_____
	(Affix Corporate Seal)
	_____
	Telephone:

CERTIFICATE AS TO CORPORATE PRINCIPAL

I, _____, certify that I am the _____, Secretary of the Corporation named as Principal in the within Bond; that _____ _____, who signed the said Bond on behalf of the Principal was then _____, of said Corporation; that I know his signature thereof is genuine; and that said Bond was duly signed, sealed, an attested for and in behalf of said Corporation by authority of its governing body.

_____
Title

_____ _____

Date: _____ (Affix Corporate Seal)

_____
Telephone No.

The rate of premium on this Bond is _____ per thousand. Total of premium charge

$_____

NOTE: The above must be filled in by Corporate Surety. Power-of-Attorney of person signed for Surety company must be attached.

SECTION A-10

NOTICE OF AWARD

Project Name:
West Laredo Multi-modal Trade Corridor – Phase II
(Flecha/Las Cruces Realignment Project)
CSJ: 0922-33-076

The City of Laredo has considered the bids submitted for the above described project in response to its advertisement for bids dated **_____, 20__ and _____, 20__,** and related information to Bidders.

You are hereby notified that your bid in the net amount of **$_____** has been favorable considered for the project by the City Council at its regular council meeting on **_____, 20__.** Pursuant to the information to Bidders you are asked to provide five (5) original signed contracts and to return the same, along with the required original Certificate of Insurance, and Payment Bond and Performance Bond within ten (10) days of your receipt of this Notice, for the approval and signature of the City Manager.

For the purpose of effective date of the required Certificate of Insurance, and the Performance Bond and the Payment Bond, the date of **_____, 20__,** may be considered the date of the contract, if the Documents are approved by the City Manager.

If you fail to submit the signed Contract Performance and Payment Bonds, and the Certificate of Insurance within ten (10) working days from your receipt of this Notice, your bid will be considered as withdrawn and your bid bond will be forfeited, unless an extension for submittals has been requested in writing and approved by the City.

The Construction Contract time of _____ (____) working/calendar days is to be strictly adhered to per Division B Section 1 and contractor agrees to pay liquidated damages for late completion an amount of $_____ for each consecutive day exceeding the contract time allotted.

You are asked to acknowledge receipt of this Notice by signing in the appropriate place below.

Dated this the ____ **day of _____ of 20__.**

CITY OF LAREDO ENGINEERING DEPT.

_____
Eliud De Los Santos, P.E.
City Engineer

ACKNOWLEDGMENT:

Receipt of this Notice is hereby acknowledged
_____

Dated this _____

_____
Authorized Signature
Title:_____
Div-A Notice of Award

SECTION A-11

CERTIFICATE OF OWNER'S ATTORNEY

Project Name:
West Laredo Multi-modal Trade Corridor – Phase II
(Flecha/Las Cruces Realignment Project)
CSJ: 0922-33-076

Awarded by the City Council:

I, the City Attorney, the duly authorized and acting legal representative of THE CITY OF LAREDO, do hereby certify as follows:

I have examined the attached Contract(s) and Surety bonds and the manner of execution thereof, and I am of the opinion that each of the aforesaid Agreements has been duly executed by the proper parties thereto acting through their duly authorized representatives; that said representatives have full power and authority to execute said Agreements on behalf of the respective parties named thereon; and that the foregoing Agreements constitute valid and legally binding obligations upon the parties executing the same in accordance with terms, conditions, and provisions thereof.

_____
City Attorney

Date: _____

SECTION A-12

NOTICE TO PROCEED

Date: _____

To: _____

Project Name:
West Laredo Multi-modal Trade Corridor – Phase II
(Flecha/Las Cruces Realignment Project)
CSJ: 0922-33-076

In accordance with the construction contract dated _____ you are hereby authorized to proceed on_____.
Contract time is **__One hundred seventy-four (174)__ working days**. **Completion date for the project is approximately _____, _____.**

CITY OF LAREDO ENGINEERING DEPT.

_____
Eliud De Los Santos, P.E.
City Engineer

The above NOTICE TO PROCEED is hereby acknowledged by

_____

on this the _____ day of _____.

_____
Authorized Signature

_____
Typed Name:

Title: _____

DIVISION B
SECTION 1

CONTRACT TIME & LIQUIDATED DAMAGES

Project Name:
West Laredo Multi-modal Trade Corridor – Phase II
(Flecha/Las Cruces Realignment Project)
CSJ: 0922-33-076

The Contract Performance for this project shall be **One hundred seventy-four (174) working days** defined in the Specifications under Local Government General Requirements and Covenants 1L.

The time set forth in the proposal for the completion of the work is an essential element of the Contract. For each day under the conditions described in the preceding Paragraph that any work shall remain uncompleted after the expiration of the days specified in the Contract, together with any additional days allowed, the amount per day given in the following schedule will be deducted from the money due or to become due the Contractor, as liquidated damages for late completion of the specified work.

FOR AMOUNT OF CONTRACT		
From More Than	**To and Including**	**Amount of Penalty Per Day over Contract Time**
$0	$100,000	$200
100,000	500,000	400
500,000	1,000,000	550
1,000,000	2,000,000	700
2,000,000	5,000,000	850
5,000,000	10,000,000	1,200
10,000,000	15,000,000	1,500
15,000,000	20,000,000	1,700
20,000,000	Over 20,000,000	2,500

SECTION B-4

INSPECTION BY CITY

Project Name:
West Laredo Multi-modal Trade Corridor – Phase II
(Flecha/Las Cruces Realignment Project)
CSJ: 0922-33-076

The work covered by these Specifications shall at all times be subject to inspection by the City of Laredo (City) authorized inspectors.

The Contractor shall furnish the City Inspector with every reasonable facility for ascertaining whether the work performed is substandard and deviates from the requirements of the plans and specifications. The City Inspector shall have the authority to halt the construction of any portion of the work not meeting requirements until such time as said work has been corrected to the satisfaction of the Inspector and the Engineer.

City's normal working hours are Monday through Friday**, not including Saturdays, Sundays, or legal holidays observed by the City** from 8:00 A.M. to 5:00 P.M. The contractor shall notify the City at least twenty-four (24) hours in advance for any work that is to be scheduled beyond the limits of the City's working hours, and the Contractor shall not begin any such work scheduled unless proper inspection and/or testing has been pre-arranged with the City, with the cost for such inspection beyond the City's working hours borne by the Contractor**. However, should the City opt to expedite a project and chooses a calendar day contract for such endeavor, the City will bear the 8:00 A.M. to 5:00 P.M. inspection cost only, and the contractor pays for time beyond the city's working hours limit.**

Payment due for overtime inspection is expected to be processed timely, otherwise the City may elect to deduct said amount due from the contractor's monthly estimate. See Article 9L.4 Scope of Payment.

SECTION B-5

Project Name:
West Laredo Multi-modal Trade Corridor – Phase II
(Flecha/Las Cruces Realignment Project)
CSJ: 0922-33-076

The general contractor shall erect two (2) signs, unless otherwise noted by the City Engineers, at the project site identifying the project and indicating that the City of Laredo is participating in the development of the project.

The project signs shall be substantially in accordance with the drawing printed on the following page and shall be made from ¾ inch plywood, placed in a prominent location and maintained in good condition until completion of the project.

THE CONTRACTOR SHALL REMOVE AND DISPOSE OF THE PROJECT

CONSTRUCTION SIGN WHEN THE WORK HAS BEEN COMPLETED

City of Laredo, Texas

West Laredo Multi-modal Trade Corridor – Phase II
(Flecha/Las Cruces Realignment Project)
CSJ: 0922-33-076

Honorable Dr. Victor D. Treviño
Mayor

Vanessa Perez – Mayor Pro-Tempore
Gilbert Gonzalez – Council Member District I
Ricardo Richie Rangel, Jr.– Council Member District II
Melissa R. Cigarroa – Council Member District III

Ricardo "Rick" Garza – Council Member District IV
Ruben Gutierrez, Jr. – Council Member District V
Dr. David Tyler King – Council Member District VI
Alyssa Cigarroa – Council Member District VIII

Joseph Neeb, City Manager
(956)791-7300

Eliud De Los Santos, P.E.
City Engineer
(956)791-7346

KCI Technologies, Inc
7109 N. Bartlett Ave., Suite 201
Laredo, TX 78041
(956) 729-7844

Contractor's Name
Address
City, State, Zip Code
Telephone Number
Fax Number

NOTE: Signs are to be installed in ground on 4' x 4' posts
Blue borders
White background
Red letter
Two (2) project signs are required - 4' x 8'

SECTION B-6

ILLEGAL DUMPING

The general contractor shall not dispose of any material whatsoever taken from the project site, onto any areas not considered to be legal dump sites. Materials such as broken concrete, asphalt, rebar, trash, etc. are to be disposed of properly, i.e. at the city landfill or as directed by the city engineer. Unless otherwise noted, no material, including dirt, is to be dumped or place into an existing creek or channel.

The general contractor is hereby instructed to contact the City of Laredo Environmental Dept. at 956-794-1650 for additional information on illegal dumping city ordinances.

*****Building construction debris should be hauled to the Landfill only by a **franchised hauler**.

CSJ:	**0922-33-076**
PROJECT:	**DMO 2003 (512)**
COUNTY:	**WEBB**
HIGHWAY:	**LAS CRUCES REALIGNMENT**

CITY OF LAREDO
GENERAL AND SPECIAL SPECIFICATIONS FOR LAM
VERSION 2024

ITEM NO.	**DESCRIPTION**
Items 1L TO 9L	General Requirements and Covenants

TEXAS DEPARTMENT OF TRANSPORTATION
GOVERNING SPECIFICATIONS AND SPECIAL PROVISIONS

All standard specifications and special provisions applicable to this project are identified as follows:

STANDARD SPECIFICATIONS: ADOPTED BY THE TEXAS DEPARTMENT OF TRANSPORTATION SEPTEMBER 1, 2024. STANDARD SPECIFICATIONS ARE INCORPORATED INTO THE CONTRACT BY REFERENCE.

ITEM NO.	**DESCRIPTION**
100	Preparing Right of Way (002)
104	Removing Concrete
106	Obliterating Abandoned Road
110	Excavation
132	Embankment (100)(204)(210)(216)(400)
164	Seeding for Erosion Control (162)(166)(168)
168	Vegetative Watering
341	Dense-Graded Hot-Mix Asphalt
402	Trench Excavation Protection
403	Temporary Special Shoring
416	Drilled Shaft Foundations (420)(421)(440)(448)
432	Riprap (420)(421)(427)(440)
450	Railing
462	Concrete Box Culverts and Storm Drains (400)(420)(421)(424)(440)(464)
464	Reinforced Concrete Pipe (400)
465	Manholes and Inlets (400)(420)(421)(440)(471)
466	Headwalls and Wingwalls (400)(420)(421)(430)(440)(464)
496	Removing Structures

500	Mobilization
502	Barricades, Signs and Traffic Handling
503	Portable Changeable Message Sign
506	Temporary Erosion, Sedimentation, and Environmental Controls
512	Portable Concrete Traffic Barrier (421)(440)(442)
528	Colored Textured Concrete and Landscape Pavers (420)(421)(440)
529	Concrete Curb, Gutter, and Combined Curb and Gutter (360)(420)(421)(440)
530	Intersections, Driveways, and Turnouts (247)(260)(263)(275)(276)(292)(316)(330)(334)(340)(360)(421)(440)
531	Sidewalks (104)(360)(420)(421)(440)(530)
540	Metal Beam Guard Fence
544	Guardrail End Treatments
618	Conduit (400)(445)(476)(622)
620	Electrical Conductors
624	Ground Boxes (421)(440)
628	Electrical Services (441)(445)(449)(618)(620)(627)(656)
644	Small Roadside Sign Supports and Assemblies (421)(440)(441)(442)(445)(634)(636)(643)(656)
666	Reflectorized Pavement Markings (316)(318)(662)(677)(678)
672	Raised Pavement Markers (677)(678)
680	Installation of Highway Traffic Signals (610)(625)(627)(634)(636)(656)
681	Temporary Traffic Signals
682	Vehicle and Pedestrian Signal Heads
684	Traffic Signal Cables
686	Traffic Signal Pole Assemblies (Steel) (421)(441)(442)(445)(449)
687	Pedestal Pole Assemblies (Steel) (445)(449)(656)
688	Pedestrian and Vehicle Detectors

SPECIAL PROVISIONS: SPECIAL PROVISIONS WILL GOVERN AND TAKE PRECEDENCE OVER THE SPECIFICATIONS ENUMERATED HEREON WHATEVER IN CONFLICT WITH

Required Contract Provisions	FEDERAL-AID CONSTRUCTION CONTRACTS FHWA-1273 – Revised October 23, 2023
Required Contract Provisions	Wage Rates
Required Contract Provisions	Contractor Certifications
Required Contract Provisions	Child Support Statement
Required Contract Provisions	Prohibition on certain telecommunications equipment or services

Special Provision	000-001L:	Nondiscrimination
Special Provision	000-002L:	Certification of nondiscrimination in employment
Special Provision	000-007L:	Cargo Preference Act requirements in federal aid contracts
Special Provision	000-018L:	Schedule of liquidated damages
Special Provision	000-022L:	Disadvantaged business enterprise in federal-aid contracts
Special Provision	006-001L:	Control of materials
Special Provision	506-001L:	Temporary erosion, sedimentation, and environmental controls

SPECIAL SPECIFICATIONS - TxDOT

SS3005	Spray Applied Underseal Membrane
SS3007	Bonding Course
SS6005	Networking Intelligent Transportation System (ITS) Communications Cable
SS6008	Radar Vehicle Detection System for Signalized Intersection Control
SS6009	ITS System Integration
SS6014	Intelligent Transportation System (ITS) Radio
SS6018	Digital Closed-Circuit Television (CCTV) Field Equipment

SPECIAL SPECIFICATIONS - CITY OF LAREDO

102	Excavation and Backfill for Utilities
104	PVC Pipe
106	Ductile Iron Pipe
110	Water Valves
116	Hydrostatic Tests for Pressure Mains
120	Concrete Encasement, cradles, saddles and collars
128	Disposal of Materials
130	DI Fittings
132	Pipe and Joint Restraints
134	Flowable Backfill
136	Cement Stabilized Backfill

Items 1L–9L

Local Government General Requirements and Covenants

Introduction
Local Government General Requirements

For all projects with State or Federal funds, and/or all projects on the State Highway System regardless of funding source, a Local Government must either adopt the latest TxDOT Standard Specifications, Special Specifications, and required Special Provisions or request TxDOT written approval of alternate, equivalent specifications. TxDOT's *"2024 Standard Specifications for Construction and Maintenance of Highways, Streets, and Bridges"* are the latest TxDOT Standard Specifications. These "General Requirements" along with additional requirements specified by the particular local government, are intended as a template for Items 1-10 in TxDOT's Standard Specifications on projects let by a local government that is on the State Highway System or includes reimbursement to the local government using FHWA or TxDOT funds.

This document is intended to be used as a template that allows local governments to modify Items 1-10 to meet their particular needs while assuring that all local, state, and federal statutory requirements are addressed. As this document modifies a TxDOT publication, there may be a question about terminology. In general, the "Owner" or the "Engineer" references the local government or its representatives (Consulting Engineers, etc.). Reference to "Department" or "Engineer" in the construction and maintenance specifications refers to the local government, except when it is referencing a TxDOT specification, manual, material specification, Material Producers List or test method.

Foreword

OUTLINE OF SPECIFICATIONS

Each specification is outlined by articles and sections. The basic articles required for a specification are:

1. **DESCRIPTION**
2. **MATERIALS**
3. **EQUIPMENT**
4. **CONSTRUCTION OR WORK METHODS**
5. **MEASUREMENT**
6. **PAYMENT**

Some articles are not used in every item. Measurement and Payment articles are combined when the work described is subsidiary to bid items of the Contract.

HIERARCHY OF ORGANIZATIONAL ELEMENTS

Here “XXX” represents the item number. The hierarchy of organizational elements available below the item level is as follows:

XXX.1., Article
XXX.1.1., Section
XXX.1.1.1., Section
XXX.1.1.1.1., Section
XXX.1.1.1.1.1., Section
XXX.1.1.1.1.1.1., Section

The term section is used for all breaks below the article.

Item 1L
Abbreviations and Definitions

1. APPLICABILITY

Wherever the following terms are used in these specifications or other Contract documents, the intent and meaning will be interpreted as shown below.

2. ABBREVIATIONS

AAR	Association of American Railroads
AASHTO	American Association of State Highway and Transportation Officials
ACI	American Concrete Institute
ACPA	American Concrete Pipe Association
AI	Asphalt Institute
AIA	American Institute of Architects
AISC	American Institute of Steel Construction
AISI	American Iron and Steel Institute
AITC	American Institute of Timber Construction
ALSC	American Lumber Standard Committee, Inc.
AMPP	Association for Materials Protection and Performance
AMRL	AASHTO Materials Reference Laboratory
ANLA	American Nursery and Landscape Association
ANSI	American National Standards Institute
APA	The Engineered Wood Association
API	American Petroleum Institute
APWA	American Public Works Association
AREMA	American Railway Engineering and Maintenance-of-Way Association
ASBI	American Segmental Bridge Institute
ASCE	American Society of Civil Engineers
ASLA	American Society of Landscape Architects
ASME	American Society of Mechanical Engineers
ASNT	American Society for Nondestructive Testing
ASTM	American Society for Testing and Materials
AWC	American Wood Council
AWG	American Wire Gage
AWPA	American Wood Protection Association
AWPI	American Wood Preservers Institute
AWS	American Welding Society
AWWA	American Water Works Association
BMP	Best Management Practices
CFR	Code of Federal Regulations
CMP	Corrugated Metal Pipe
COE	U.S. Army Corps of Engineers
CRSI	Concrete Reinforcing Steel Institute
DBE	Disadvantaged Business Enterprise
DMS	Departmental Materials Specification
EIA	Electronic Industries Alliance
EPA	U.S. Environmental Protection Agency
FHWA	Federal Highway Administration, U.S. Department of Transportation
FSS	Federal Specifications and Standards (General Services Administration)
GSA	General Services Administration
HUB	Historically Underutilized Business
ICEA	Insulated Cable Engineers Association

IEEE	Institute of Electrical and Electronics Engineers
IESNA	Illuminating Engineering Society of North America
IMSA	International Municipal Signal Association
ISO	International Organization for Standardization
ITE	Institute of Transportation Engineers
ITS	Intelligent Transportation System
LG	Local Government
LRFD	Load and Resistance Factor Design
MASH	Manual for Assessing Safety Hardware
MPL	Material Producer List
NCHRP	National Cooperative Highway Research Program
NCR	Nonconformance Report
NEC	National Electrical Code (Published by NFPA)
NEMA	National Electrical Manufacturers Association
NEPA	National Environmental Policy Act
NESC	National Electrical Safety Code
NFPA	National Fire Protection Association
NIST	National Institute of Standards and Technology
NPCA	National Precast Concrete Association
NRM	Nonhazardous Recyclable Material
NRMCA	National Ready Mixed Concrete Association
NSBA	National Steel Bridge Alliance
OSHA	Occupational Safety and Health Administration, U.S. Department of Labor
PCA	Portland Cement Association
PCI	Precast/Prestressed Concrete Institute
PPI	Plastics Pipe Institute
PS&E	Plans, Specifications, and Estimates
PSL	Project Specific Location
PTI	Post-Tension Institute
QA	Quality Assurance
QC	Quality Control
RCP	Reinforced Concrete Pipe
RPLS	Registered Public Land Surveyor
RRC	Railroad Commission of Texas
SBE	Small Business Enterprise
SFPA	Southern Forest Products Association
SI	International System of Units
SPIB	Southern Pine Inspection Bureau
TAC	Texas Administrative Code
TCEQ	Texas Commission on Environmental Quality
TDLR	Texas Department of Licensing and Regulation
TMUTCD	Texas Manual on Uniform Traffic Control Devices
UL	Underwriters Laboratory, Inc.
USC	United States Code
WRI	Wire Reinforcement Institute
WWPA	Western Wood Products Association

3. DEFINITIONS

3.1. **Abrasive Blasting**. Spraying blasts of pressurized air combined with abrasive media.

3.2. **Actual Cost**. Contractor's actual cost to provide labor, material, equipment, and project overhead necessary for the work.

3.3. **Addendum**. Change in proposal forms developed between advertising and bid submittal deadline.

3.4. **Additive Alternate**. A bid item contained in a proposal that is not a regular item or a replacement alternate bid item. The additive alternate item(s) include work that may be added to the base bid at the time of letting.

3.5. **Advertisement**. The public announcement required by law inviting bids for work to be performed or materials to be furnished.

3.6. **Affiliates**. Two or more Bidders are affiliated if they share common officers, directors, or stockholders; a family member of an officer, director, or stockholder of one Bidder serves in a similar capacity in another of the Bidders; an individual who has an interest in, or controls a part of, one Bidder either directly or indirectly also has an interest in, or controls a part of, another of the Bidders; the Bidders are so closely connected or associated that one of the Bidders, either directly or indirectly, controls or has the power to control another Bidder; one Bidder controls or has the power to control another Bidder; or the Bidders are closely allied through an established course of dealings, including, but not limited to, the lending of financial assistance. Refer to 43 TAC § 9.12(g), "Affiliated Entities."

3.7. **Air Blasting**. Spraying blasts of pressurized air free of oil and moisture.

3.8. **Air Temperature**. The temperature measured in degrees Fahrenheit (°F) in the shade, not in the direct rays of the sun, and away from artificial heat.

3.9. **Anticipated Profit**. Profit for work not performed.

3.10. **Apparent Low Bidder**. The Bidder determined to have the numerically lowest total bid as a result of the tabulation of bids by the Owner.

3.11. **Architect of Record**. A person registered as an architect or licensed as a landscape architect, in conformance with State law, exercising overall responsibility for the design or a significant portion of the design and performing certain Contract administration responsibilities as described in the Contract; or a firm employed by the Owner to provide professional architectural services.

3.12. **Arterial Highway**. A highway used primarily for through traffic and usually on a continuous route.

3.13. **Available Bidding Capacity**. Not applicable to Locally Let projects.

3.14. **Award**. The Owner's acceptance of a Contractor's bid for a proposed Contract that authorizes the Owner to enter into a Contract.

3.15. **Bid**. The offer from the Bidder for performing the work described in the proposal.

3.16. **Bid Bond**. The security executed by the Contractor and the Surety furnished to the Owner to guarantee payment of liquidated damages if the Contractor fails to enter into an awarded Contract.

3.17. **Bid Error**. A mathematical mistake made by a Bidder in the unit price entered into the proposal.

3.18. **Bidder**. An individual, partnership, limited liability company, corporation, or joint venture submitting a bid for a proposed Contract.

3.19. **Bidders Questionnaire**. A prequalification form that reflects detailed equipment and experience data but waives audited financial data.

3.20. **Bidding Capacity**. Not applicable to Locally Let projects.

3.21. **Blast Cleaning**. Using one of the blasting methods including, but not limited to water blasting, low-pressure water blasting, high-pressure water blasting, abrasive blasting, water-abrasive blasting, shot blasting, slurry blasting, water -injected abrasive blasting, and brush blasting.

3.22. **Bridge**. A structure, including supports, erected over a depression or an obstruction (e.g., water, a highway, or a railway) with a roadway or track for carrying traffic or other moving loads, and having an opening measured along the center of the roadway of more than 20 ft. between faces of abutments, spring lines of arches, or extreme ends of the openings for multiple box culverts.

3.23. **Brush Blasting**. Sweeping lightly with an abrasive blast to remove loose material.

3.24. **Building Contract**. Not applicable to Locally Let projects.

3.25. **Callout Work**. Contracts, or work items in Contracts, that require a Contractor's response on an as-needed basis (e.g., see Item 351, "Flexible Pavement Structure Repair").

3.26. **Certificate of Insurance**. A form approved by the Owner covering insurance requirements stated in the Contract.

3.27. **Change Order**. Written order to the Contractor detailing changes to the specified work, item quantities, or any other modification to the Contract.

3.28. **City**. The City of Laredo, Texas, a home-rule, Texas Municipal Corporation located in Webb County and identified as "City" in the Contract and these General Conditions, is referred throughout the Contract Documents as if singular in number. Whenever the term "City" is found in this Contract or the Contract Documents, such term shall include City's agents, elected officials, employees, officers, directors, volunteers, representatives, successors and assigns.

3.29. **City Council. The duly elected members of the council of the City of Laredo, Texas.**

3.30. **Commission**. The Texas Transportation Commission or authorized representative.

3.31. **Concrete Construction Joint**. A joint formed by placing plastic concrete in direct contact with concrete that has attained its initial set.

3.32. **Concrete Repair Manual**. TxDOT manual specifying methods and procedures for concrete repair as an extension of the standard specifications.

3.33. **ConcreteWorks©**. TxDOT-owned software for concrete heat analysis. Software is available on the TxDOT's website.

3.34. **Confidential Questionnaire**. A prequalification form that reflects detailed financial and experience data.

3.35. **Construction Contract**. A Contract entered under state law for the construction, reconstruction, repair, or maintenance of a segment of the Owner's or State transportation highway system.

3.36. **Consultant**. The licensed professional engineer or engineering firm, or the architect or architectural firm, registered in the State of Texas and under Contract to the Owner to perform professional services. The consultant may be the Engineer or architect of record or may provide services through and be subcontracted to the Engineer or architect of record.

3.37. **Contract**. The agreement between the Owner and the Contractor establishing the obligations of the parties for furnishing of materials and performance of the work prescribed in the Contract documents.

3.38. **Contract Documents**. Elements of the Contract including, but not limited to, the plans, specifications incorporated by reference, special provisions, special specifications, Contract bonds, change orders, and supplemental agreements.

3.39. **Contract Time**. The number of working days specified for completion of the work, including authorized additional working days.

3.40. **Contractor**. The individual, partnership, limited liability company, corporation, or joint venture and all principals and representatives with which the Contract is made by the Owner.

3.41. **Control of Access**. The condition in which the right to access of owners or occupants of abutting land or other persons in connection with a highway is fully or partially controlled by public authority.

3.42. **Control Point**. An established point shown on the plans to provide vertical and horizontal references for geometric control for construction.

3.43. **Controlled Access Highway**. Any highway to or from which access is denied or controlled, in whole or in part, from or to abutting land or intersecting streets, roads, highways, alleys, or other public or private ways.

3.44. **Cross-Sections**. Graphic representations of the original ground and the proposed facility, at right angles to the centerline or base line.

3.45. **Culvert**. Any buried structure providing an opening under a roadway for drainage or other purposes. Culverts may also be classified as bridges. (See Section 1.3.22., "Bridge.")

3.46. **Cycle**. The activity necessary for performing the specified work within the right of way project limits once.

3.47. **Daily Road-User Cost**. Damages based on the estimated daily cost of inconvenience to the traveling public resulting from the work.

3.48. **Debar (Debarment)**. Disqualification of an entity from bidding on or entering into a Contract with the Owner, from participating as a subcontractor under a Contract with the Owner, and from participating as a supplier of materials or equipment to be used under a Contract with the Owner.

3.49. **Department**. The Texas Department of Transportation (TxDOT).

3.50. **Departmental Materials Specifications**. Reference specifications for various materials published by the Materials and Tests Division.

3.51. **Detour**. A temporary traffic route around a closed portion of a road.

3.52. **Direct Traffic Culvert**. Concrete box culvert whose top slab is used as the final riding surface or is to have an overlay or other riding surface treatment.

3.53. **Disadvantaged Business Enterprise**. A for-profit small business certified through the Texas Unified Certification Program in accordance with 49 CFR Part 26, that is at least 51% owned by one or more socially and economically disadvantaged individuals, or in the case of a publicly owned business, in which at least 51% of the stock is owned by one or more socially and economically disadvantaged individuals, and whose management and daily business operations are controlled by one or more of the individuals who own it.

3.54. **Divided Highway**. A highway with separate roadways intended to move traffic in opposite directions.

3.55. **Easement**. A real property right acquired by one party to use land belonging to another party for a specified purpose.

3.56. **Electronic Vault**. The Owner's bidding system where electronic bids are stored before bid opening.

3.57. **Engineer**. The Chief Engineer of the Owner or the authorized representative of the Chief Engineer.

3.58. **Equipment Watch**. Publication containing equipment rental rates.

3.59. **Escalation Ladder**. A process to determine issue resolution during the course of the Contract.

3.60. **Expressway**. A divided arterial highway for through traffic with full or partial control of access and generally with grade separations at intersections.

3.61. **Family Member**. A family member of an individual is the individual's parent, parent's spouse, stepparent, stepparent's spouse, sibling, sibling's spouse, spouse, child, child's spouse, spouse's child, spouse's child's spouse, grandchild, grandparent, uncle, uncle's spouse, aunt, aunt's spouse, first cousin, or first cousin's spouse. Refer to 43 TAC § 9.12(g), "Affiliated Entities."

3.62. **Force Account**. Payment for directed work based on the actual cost of labor, equipment, and materials furnished with markups for project overhead and profit.

3.63. **Freeway**. An expressway with full control of access.

3.64. **Frontage Road**. A local street or road auxiliary to and located along an arterial highway for service to abutting property and adjacent areas and for control of access (sometimes known as a service road, access road, or insulator road).

3.65. **Hazardous Materials or Waste**. Hazardous materials or waste include, but are not limited to, explosives, compressed gas, flammable liquids, flammable solids, combustible liquids, oxidizers, poisons, radioactive materials, corrosives, etiologic agents, and other material classified as hazardous by 40 CFR 261, or applicable state and federal regulations.

3.66. **High-Pressure Water Blasting**. Water blasting with pressures between 5,000 and 10,000 psi.

3.67. **Highway, Street, or Road**. General terms denoting a public way for purposes of and related to vehicular, pedestrian, and bicycle travel, including the entire area within the right of way including Intersections and Easements; all related structures, improvements, and appurtenances, including but not limited to the roadside and roadside facilities, drainage systems, signal systems, and other traffic in formation and control systems; or other structures or improvements that directly or indirectly serve public travel. Recommended usage in urban areas is highway or street, and in rural areas, highway or road.

3.68. **Historically Underutilized Business (HUB)**. A corporation, sole proprietorship, partnership, or joint venture formed for the purpose of making a profit certified by the Texas Building and Procurement Commission, and 51% owned by one or more persons who are economically disadvantaged because of their identification as members of certain groups, including African Americans, Hispanic Americans, Asian-Pacific Americans, Native Americans, or women, and have a proportionate interest and demonstrate active participation in the control, operation, and management of the business' affairs. Individuals meeting the HUB definition are required to be residents of the State of Texas. Businesses that do not have their primary headquarters in the State of Texas are not eligible for HUB certification.

3.69. **In Writing**. Communication memorialized, including written or electronic documentation by email or letter only.

3.70. **Incentive and Disincentive Provisions**. An adjustment to the Contract price of a predetermined amount for each day the work is completed ahead of or behind the specified milestone, phase, or Contract completion dates. The amount of the incentive and disincentive is determined based on estimated costs for engineering, traffic control, delays to the motorists, and other items involved in the Contract.

3.71. **Independent Assurance Tests**. Tests used to evaluate the sampling and testing techniques and equipment used in the acceptance program. The tests are performed by the Owner and are not used for acceptance purposes.

3.72. **Inspector**. The person assigned by the Engineer to inspect for compliance with the Contract any or all parts of the work and the materials used.

3.73. **Intelligent Transportation System**. An integrated system that uses video and other electronic detection devices to monitor traffic flows.

3.74. **Intersection**. The general area where two or more highways, streets, or roads join or cross, including the roadway and roadside facilities for vehicular, pedestrian, and bicycle traffic movements within it.

3.75. **Island**. An area within a roadway from which vehicular traffic is intended to be excluded, together with any area at the approach occupied by protective deflecting or warning devices.

3.76. **Joint Venture**. Any combination of individuals, partnerships, limited liability companies, or corporations submitting a single bid proposal.

3.77. **Lane Rental**. A method to assess the Contractor daily or hourly rental fees for each lane, shoulder, or combination of lanes and shoulders taken out of service.

3.78. **Letting**. The receipt, opening, tabulation, and determination of the apparent low Bidder.

3.79. **Letting Official**. The employee empowered by the Owner to officially receive bids and close the receipt of bids at a letting.

3.80. **Licensed Professional Engineer**. A person who has been duly licensed by the Texas Board of Professional Engineers to engage in the practice of engineering in the State of Texas; also referred to as a Professional Engineer.

3.81. **Limits of Construction**. An area with established boundaries, identified within the highway right of way and easements, where the Contractor is permitted to perform the work.

3.82. **Local Street or Road**. A street or road primarily for access to residence, business, or other abutting property.

3.83. **Low-Pressure Water Blasting**. Water blasting with pressures between 3,000 and 5,000 psi.

3.84. **Major Item**. An item of work included in the Contract that has a total cost equal to or greater than 5% of the original Contract or $100,000 whichever is less. A major item at the time of bid will remain a major item. An item not originally a major item does not become one through the course of the Contract.

3.85. **Material Producer List**. TxDOT-maintained list of approved products, materials, laboratories, service providers, manufacturers, and producers.

3.86. **Materially Unbalanced Bid**. A bid that generates a reasonable doubt that award to the Bidder submitting a mathematically unbalanced bid will result in the lowest ultimate cost to the Owner.

3.87. **Materials Contract**. Not applicable to Locally Let projects.

3.88. **Materials Supplier's Questionnaire**. A prequalification form that reflects basic information, such as company contact, signature authority, and other requirements, but waives financial, equipment, and experience data.

3.89. **Mathematically Unbalanced Bid**. A bid containing bid prices that do not reflect reasonable actual costs plus a reasonable proportionate share of the Bidder's anticipated profit, overhead costs, and other indirect costs.

3.90. **Median**. The portion of a divided highway separating the traffic lanes in opposite directions.

3.91. **Milestone Date**. The date that a specific portion of the work is to be completed before the completion date for all work under the Contract.

3.92. **Monolithic Concrete Placement**. The placement of plastic concrete in such manner and sequence to prevent a construction joint.

3.93. **National Holidays**. January 1, the last Monday in May, July 4, the first Monday in September, the fourth Thursday in November, December 24, and December 25.

3.94. **Nonhazardous Recyclable Material**. A material recovered or diverted from the nonhazardous waste stream for the purposes of reuse or recycling in the manufacture of products that may otherwise be produced using raw or virgin materials.

3.95. **Nonresident Bidder**. A Bidder whose principal place of business is not in Texas. This includes a Bidder whose ultimate parent company or majority owner does not have its principal place of business in Texas.

3.96. **Nonresponsive Proposal**. A proposal that does not meet the criteria for acceptance contained in the proposal form.

3.97. **Non-Site-Specific Contracts**. Contracts where a geographic region is specified for the work and work orders, with or without plans, detail the limits and work to be performed.

3.98. **Notification**. Either written or oral instruction to the Contractor. Voice mail is oral notification.

3.99. **Owner.** See **City**

3.100. **Pavement**. That part of the roadway with a constructed surface for the use of vehicular traffic.

3.101. **Pavement Structure**. Combination of surface course and base course placed on a subgrade to support the traffic load and distribute it to the roadbed.

3.101.1. **Base Course**. One or more layers of specified material thickness placed on a subgrade to support a surface course.

3.101.2. **Subgrade**. The top surface of a roadbed upon which the pavement structure, shoulders, and curbs are constructed.

3.101.3. **Subgrade Treatment**. Modifying or stabilizing material in the subgrade.

3.101.4. **Surface Course**. Pavement structure layers designed to accommodate the traffic load. The top layer resists skidding, traffic abrasion, and the disintegrating effects of climate and is sometimes called the wearing course.

3.102. **Payment Bond**. The security executed by the Contractor and the Surety, furnished to the Owner to guarantee payment of all legal debts of the Contractor pertaining to the Contract.

3.103. **Performance Bond**. The security executed by the Contractor and the Surety, furnished to the Owner to guarantee the completion of the work in accordance with the terms of the Contract.

3.104. **Plans**. The drawings approved by the Engineer, including true reproductions of the drawings that may show the location, character, dimensions, and details of the work and are a part of the Contract. Documents may include drawings or digital files.

3.105. **Power of Attorney for Surety Bonds**. An instrument under corporate seal appointing an attorney-in-fact to act on behalf of a Surety in signing bonds.

3.106. **Prequalification**. The process for determining a Contractor's eligibility to bid work.

3.107. **Prequalification Statement**. The forms on which required information is furnished concerning the Contractor's ability to perform and finance the work.

3.108. **Project-Specific Location**. A material source, plant, waste site, parking area, storage area, field office, staging area, haul road, or other similar location either outside the project limits or within the project limits but not specifically addressed in the Contract.

3.109. **Proposal**. The offer from the Bidder submitted on the prescribed form, including addenda issued, giving unit bid prices for performing the work described in the plans and specifications.

3.110. **Proposal Form**. The form printed and sent to the Bidder by the Owner or printed by the Bidder from the Owner's bidding system.

3.111. **Proposal Guaranty**. The security furnished by the Bidder as a guarantee that the Bidder will enter into a Contract if awarded the work.

3.112. **Quality Assurance (QA)**. Sampling, testing, inspection, and other activities conducted by the Engineer to determine payment and make acceptance decisions.

3.113. **Quality Control (QC)**. Sampling, testing, and other process control activities conducted by the Contractor to monitor production and placement operations.

3.114. **Ramp**. A section of highway for the primary purpose of making connections with other highways.

3.115. **Recurring Maintenance Work Contracts**. Contracts or work for which maintenance is needed at the same location on more than one occasion (e.g., mowing Contracts for which mowing cycles are requested on multiple occasions).

3.116. **Referee Tests**. Tests requested to resolve differences between Contractor and Engineer test results.

3.117. **Regular Item**. A bid item contained in a proposal and not designated as an additive alternate or replacement alternate bid item.

3.118. **Rental Rate Blue Book for Construction Equipment**. Publication containing equipment rental rates.

3.119. **Repair**. Performed under Transportation Code §223, Subchapter A for Highway Improvement Contracts and includes restoration of a Highway, Street, or Road by replacing or putting together, in whole or in part, what is torn, broken, or otherwise damaged. Repair denotes the process of restoring all or part of a Highway, Street, or Road that has been subjected to decay, waste, injury, partial destruction, erosion, dilapidation, degradation, etc.

3.120. **Replacement Alternate**. A bid item identified the proposal form that a Bidder may substitute for a specific regular item of work.

3.121. **Responsive Bid**. A proposal that meets all requirements of the proposal form for acceptance.

3.122. **Right of Way**. A general term denoting land or property devoted to transportation purposes.

3.123. **Roadbed**. The graded portion of a highway prepared as foundation for the pavement structure and shoulders. On divided highways, the depressed median type and the raised median type highways are considered to have two roadbeds. Highways with a flush median are considered to have one roadbed. Frontage roads are considered separate roadbeds.

3.124. **Road Master**. A railroad maintenance official in charge of a division of railway.

3.125. **Roadside**. The areas between the outside edges of the shoulders and the right of way boundaries. Unpaved median areas between inside shoulders of divided highways and areas within interchanges are included.

3.126. **Roadway**. The portion of the highway (including shoulders) used by the traveling public.

3.127. **Routine Maintenance Contract**. Not applicable to Locally Let projects.

3.128. **Sandblasting, Dry**. Spraying blasts of pressurized air combined with sand.

3.129. **Sandblasting, Wet**. Spraying blasts of pressurized water combined with sand.

3.130. **Shot Blasting**. Spraying blasts of pressurized air combined with metal shot.

3.131. **Shoulder**. That portion of the roadway contiguous with the traffic lanes for accommodation of stopped vehicles for emergency use or for lateral support of base and surface courses.

3.132. **Sidewalk**. Portion of the right of way constructed exclusively for pedestrian use.

3.133. **Slurry Blasting**. Spraying blasts of pressurized air combined with a mixture of water and abrasive media.

3.134. **Small Business Enterprise**. A firm (including affiliates) whose annual gross receipts do not exceed the U.S. Small Business Administration's size standards for 4 consecutive yr.

3.135. **Special Provisions**. Additions or revisions to these standard specifications or special specifications.

3.136. **Special Specifications**. Supplemental specifications applicable to the Contract not covered by these standard specifications.

3.137. **Specifications**. Directives or requirements issued or made pertaining to the method and manner of performing the work or to quantities and qualities of materials to be furnished under the Contract. References to DMSs, ASTM or AASHTO specifications imply the latest standard or tentative standard in effect on the date of the proposal. The Engineer will consider incorporation of subsequent changes to these documents in accordance with Item 4, "Scope of Work."

3.138. **State**. The State of Texas.

3.139. **State Holiday**. A holiday authorized by the State Legislature excluding optional State holidays and not listed in Section 1.3.91., "National Holidays." A list of State holidays can be found on the TxDOT's website.

3.140. **Station**. A unit of measurement consisting of 100 horizontal ft.

3.141. **Subcontract**. The agreement between the Contractor and subcontractor establishing the obligations of the parties for furnishing of materials and performance of the work prescribed in the Contract documents.

3.142. **Subcontractor**. An individual, partnership, limited liability company, corporation, or any combination thereof that the Contractor sublets, or proposes to sublet, any portion of a Contract, excluding a material supplier, a hauling firm hauling only from a commercial source to the project, a truck owner-operator, a wholly owned subsidiary, or specialty-type businesses such as security companies and rental companies.

3.143. **Subsidiary**. Materials, labor, or other elements that because of their nature or quantity have not been identified as a separate item and are included within the items on which they necessarily depend.

3.144. **Substantial Completion of Work**. The date (day) when all project work requiring lane or shoulder closures or obstructions is completed, and traffic is following the lane arrangement as shown on the plans for the finished roadway; all pavement construction and surfacing are complete; and traffic control devices and pavement markings are in their final position, unless otherwise shown on the plans. The Engineer may make

an exception for permanent pavement markings provided the lack of markings does not cause a disruption to traffic flow or an unsafe condition for the traveling public, and work zone pavement markings are in place.

3.145. **Substructure**. The part of the structure below the bridge seats but not including bearings, drilled shafts, or piling. Parapets, back walls, wing walls of the abutments, and drainage structures are considered parts of the substructure.

3.146. **Superintendent**. The representative of the Contractor who is available at all times and able to receive instructions from the Engineer or authorized Owner representatives and to act for the Contractor.

3.147. **Superstructure**. The part of the structure above the bridge seats or above the springing lines of arches and including the bearings. Flatwork construction may be considered superstructure.

3.148. **Supplemental Agreement**. Written agreement entered into between the Contractor and the Owner and approved by the Surety, covering alterations and changes in the Contract. A supplemental agreement is used by the Owner whenever the modifications include assignment of the Contract from one entity to another or other cases as desired by the Owner.

3.149. **Surety**. The corporate body or bodies authorized to do business in Texas bound with and for the Contractor for the faithful performance of the work covered by the Contract and for the payment for all labor and material supplied in the prosecution of the work.

3.150. **Surplus Materials**. Any debris or material related to the Contract not incorporated into the work.

3.151. **Suspension**. Action taken by the Owner or federal government pursuant to regulation that prohibits a person or company from entering into a Contract, or from participating as a subcontractor, or supplier of materials or equipment used in a highway improvement Contract as defined in Transportation Code, Chapter 223, Subchapter A.

3.152. **Traffic Lane**. The strip of roadway intended to accommodate the forward movement of a single line of vehicles.

3.153. **Traveled Way**. The portion of the roadway for the movement of vehicles, exclusive of shoulders and auxiliary lanes.

3.154. **Truck Owner-Operator**. An individual who owns and operates one truck for hire.

3.155. **UT-Bridge**. TxDOT-owned software for steel girder erection. Software is available on the TxDOT's website.

3.156. **UT-Lift**. TxDOT-owned software for steel girder erection. Software is available on the TxDOT's website.

3.157. **Utility**. Privately, publicly, or cooperatively owned lines, facilities, and systems for producing, transmitting, or distributing communications, power, heat, gas, oil, water, waste, or stormwater that are not connected with the highway drainage, signal systems, or other products that directly or indirectly serve the public; the utility company.

3.158. **Verification Tests**. Tests used to verify accuracy of QC and QA and mixture design testing.

3.159. **Water-Abrasive Blasting**. Spraying blasts of pressurized water combined with abrasive media.

3.160. **Water Blasting**. Spraying blasts of pressurized water of at least 3,000 psi.

3.161. **Water-Injected Abrasive Blasting**. Abrasive blasting with water injected into the abrasive and air stream at the nozzle.

3.162. **Wholly Owned Subsidiary**. A legal entity owned entirely by the Contractor or subcontractor.

3.163. **Work**. The furnishing of all labor, materials, equipment, and incidentals necessary for the successful completion of the Contract.

3.164. **Work Order**. Written notice to the Contractor to begin the work. The work order may include the date when work and time charges will begin, the allowable number of working days, and plan sheets providing details specific to a location or to an item of work for non-site-specific work. A work order is part of the Contract.

3.165. **Written Notice**. Written notice is considered to have been duly given if delivered in person to the individual or member to whom it is intended or if sent by regular, registered, or certified mail and delivered to the last known business address; sent by facsimile to the last known phone number; or sent by email to the last known address. The date of the letter will serve as the beginning day of notice. Unclaimed mail or failure to provide current contact information will not be considered a failure to provide written notice.

3.166. **Other Definitions**. As used in the Contract Documents, the following additional terms have the following meanings:

 "provide" means to furnish, install, fabricate, deliver and erect, including all services, materials, appurtenances and all other expenses necessary to complete in place and ready for operation or use;

 "shall" means the mandatory action of the party of which reference is being made;

 "as required" means as prescribed in the Contract Documents; and

 "as necessary" means all action essential or needed to complete the work in accordance with the Contract Documents and applicable laws, ordinances, construction codes and regulations.

 "party" shall refer to City or Contractor individually

 "parties" shall refer to City and Contractor collectively

Item 2L
Instructions to Bidders

1. INTRODUCTION

Instructions to the Contractor in these specifications are generally written in active voice, imperative mood. The subject of imperative sentences is understood to be "the Contractor." The Owner's responsibilities are generally written in passive voice, indicative mood. Phrases such as "as approved," "unless otherwise approved," "upon approval," "as directed," "as verified," "as ordered," and "as determined" refer to actions of the Engineer unless otherwise stated, and it is understood that the directions, orders, or instructions to which they relate are within the limitations of and authorized by the Contract.

2. ELIGIBILITY OF BIDDERS

Utilize the INFORMATION FROM BIDDERS contained in the PROPSAL at the time of bid opening. Comply with all technical prequalification requirements in the proposal.

2.1. **Bidder's Questionnaire (BQ)**. Bidders prequalified with a BQ (aka INFORMATION FROM BIDDERS) are only eligible to bid on projects identified as being waived from the requirements of "Confidential Questionnaire (CQ)." Submit the BQ contained within the PROPOSAL for approval.

3. ISSUING PROPOSAL FORMS

The Owner will issue a proposal form to a prequalified Bidder if the Engineer's estimate is within that Bidder's available bidding capacity. Request a proposal form electronically from the Owner's website. A proposal form printed directly from the Owner's website is for informational purposes only and will not be accepted as an official proposal form. In the case of a joint venture (JV), all JV participants must be prequalified. An equally divided portion of the Engineer's estimate must be within each participant's available bidding capacity.

The Owner will not issue a proposal form if one or more of the following apply:

- the Bidder is suspended or debarred by the Commission or TxDOT,
- the Bidder has not fulfilled the requirements for prequalification,
- the Bidder does not have the available bidding capacity,
- the Bidder is prohibited from rebidding a specific proposal form due to a bid error on the original proposal form,
- the Bidder failed to enter into a Contract on the original award,
- the Bidder was defaulted or terminated on the original Contract, unless the Owner terminated in the best interest of the State or the public,
- the Bidder or a subsidiary or affiliate of the Bidder has received compensation from the Owner to participate in the preparation of the plans or specifications on which the bid or Contract is based,
- the Bidder is ineligible to bid on any proposed Contract in accordance with Article 7L.15., "Responsibility for Damage Claims,"
- the Bidder failed to attend a mandatory pre-bid conference,
- the Bidder or affiliate of the Bidder that was originally determined as the apparent low Bidder on a project but was deemed nonresponsive for failure to submit a DBE commitment as specified in Article 2L.14., "Disadvantaged Business Enterprise (DBE)," is prohibited from rebidding that specific project, or
- the Bidder or affiliate of the Bidder that was originally determined as the apparent low Bidder on a project but was deemed nonresponsive for failure to register or participate in the Department of

Homeland Security (DHS) E-Verify system as specified in Article 2.15., "Department of Homeland Security (DHS) E-Verify System," is prohibited from rebidding that specific project.

4. INTERPRETING ESTIMATED QUANTITIES

The quantities listed on the proposal form are approximate and will be used for the comparison of bids. Payments will be made for the work performed in accordance with the Contract.

5. EXAMINING DOCUMENTS AND WORK LOCATIONS

Examine the proposal form, plans, specifications, and specified work locations before submitting a bid for the work. Submitting a bid will be considered evidence that the Bidder has performed this examination. Borings, soil profiles, water elevations, and underground utilities shown on the plans were obtained for the Owner's use in the preparation of the plans. This information is provided for the Bidder's information only, and the Owner makes no representation as to the accuracy of the data. Be aware of the difficulty of accurately classifying all material encountered in making foundation investigations, the possible erosion of stream channels and banks after survey data have been obtained, and the unreliability of water elevations other than for the date recorded.

Oral explanations, instructions, or consideration for Contractor-proposed changes on the proposal form given during the bidding process are not binding. Only requirements included on the proposal form, associated specifications, plans, and Owner-issued addenda are binding. Request explanations of documents in adequate time to allow the Owner to reply before the bid opening.

Immediately notify the Owner of any error, omission, or ambiguity discovered in any part of the proposal form and Contract documents. The Owner will issue addenda when appropriate.

6. PREPARING THE BID

Prepare the bid on the proposal form furnished by the Owner. Informational proposal forms printed from the Owner's website will not be accepted.

Specify a unit price in dollars and cents for each regular item and additive alternate item, or replacement alternate item for which an estimated quantity is given.

When "Working Days" is an item, submit the number of working days to be used to complete the Contract or phases of the Contract shown on the plans.

The Owner will not accept an incomplete bid. A bid that has one or more of the deficiencies listed below is considered incomplete:

- certifications were not acknowledged,
- a regular item or the additive alternate item is left blank,
- a regular item and the corresponding replacement alternate item are left blank,
- the proposal form submitted had the incorrect number of items,
- the Bidder did not acknowledge all addenda, or
- additionally, for printed bids:
    - the blank spaces for each item as required on the bid form are not filled in by writing in words in ink,
    - the bid was not signed in ink in the complete and correct name of the bidder making the bid, and signed by the person or persons authorized to bind the bidder, or
    - unit prices were not stated in dollars and cents for each bid item listed on the bid form, except in the case of a regular bid item that has an alternate bid item.

7. NONRESPONSIVE BID

The Owner will not accept a nonresponsive bid. A bid that has one or more of the deficiencies listed below is considered nonresponsive:

- the bid was not in the hands of the Letting Official at the time and location specified in the advertisement,
- a proposal form was submitted for the same project by a Bidder or Bidders and one or more of its partners or affiliates, the Bidder was not authorized to receive a proposal form under Article 2L.3., "Issuing Proposal Forms,"
- the Bidder failed to acknowledge receipt of all addenda issued,
- the proposal form was signed by a person who was not authorized to bind the Bidder or Bidders,
- the proposal guaranty did not comply with the requirements contained in this Item,
- the bid was in a form other than the official proposal form issued by the Owner,
- the Bidder modified the bid in a manner that altered the conditions or requirements for work as stated in the proposal form,
- the Bidder bid more than the maximum or less than the minimum number of allowable working days shown on the plans when working days was an item,
- a typed proposal form does not contain the information in the format shown on the "Example of Bid Prices Submitted by Computer Printout" on the proposal form,
- the Bidder did not meet the requirements of the technical qualification,
- the Bidder failed to submit a DBE commitment as specified in Article 2L.14., "Disadvantaged Business Enterprise (DBE)," or
- the Bidder failed to participate in the DHS E-Verify system as specified in Article 2L.15., "Department of Homeland Security (DHS) E-Verify System."
- The bidder is not prequalified by TxDOT

8. ELECTRONIC BID

The Bidder is responsible for taking the appropriate measures to submit a bid. These measures include, but are not limited to acquiring hardware, software, and Internet connectivity needed for submitting a bid via the Owner's bidding system.

8.1. **Proposal Form**. Use the electronic proposal form in the Owner's bidding system. When regular bid items have corresponding replacement alternate items, select the bid item or group of items to be used for the bid tabulation. Acknowledge all addenda listed in the Owner's bidding system.

The electronic proposal form does not contain the special provisions, special specifications, general notes, and other Contract documents. These documents are included by reference.

8.2. **Proposal Guaranty**. Provide a proposal guaranty in the amount indicated on the proposal form. Use an electronic bid bond. Guaranty checks or printed bid bonds will not be accepted.

For a JV, the bond must be in the name of all JV participants. Enter the bond authorization code into the Owner's bidding system.

It is the Bidder's responsibility to ensure the electronic bid bond is issued in the name or Owner vendor identification numbers of the Bidder or Bidders.

8.3. **Submittal of Bid**. Submit the bid to the vault using the Owner's bidding system.

8.4. **Revising the Proposal Form**. Make desired changes in the Owner's bidding system up until the time and date set for the opening of bids. The last bid submitted to the vault will be used for tabulation purposes.

8.5. **Withdrawing a Bid**. Submit an electronic or written request to withdraw a bid before the time and date set for the opening. The Owner will not accept oral requests. An electronic request must be made using the Owner's bidding system.

If a bidder is unable to withdraw an electronic bid using the Owner's bidding system, a written request may be submitted. A written request must be signed and submitted to the Letting Official conducting the letting, with proof of identification. The request must be made by a person authorized to bind the Bidder or Bidders. In the case of a JV, the Owner will accept a request from any person authorized to bind a party to the JV. The Owner may require written delegation of authority to withdraw a bid when the individual sent to withdraw the bid is not authorized to bind the Bidder or Bidders.

9. PRINTED BID

9.1. **Proposal Form**. Mark all entries in ink. As an alternative to hand writing the unit prices on the proposal form, submit a typed proposal form. A typed proposal form must contain the information in the format shown on the "Example of Bid Prices Submitted by Computer Printout" on the proposal form.

When regular bid items have corresponding replacement alternate items, select the bid item or group of items to be used for the bid tabulation. Acknowledge all addenda by checking the appropriate box on the addendum acknowledgement page. Provide the complete and correct name of the Bidder submitting the bid. A person authorized to bind the Bidder must sign the proposal form. In the case of a JV, provide the complete and correct name of all Bidders submitting the bid. In the case of a JV, the person signing the proposal form must be authorized to bind all JV participants.

9.2. **Proposal Guaranty**. Provide a proposal guaranty in the amount indicated on the proposal form. Use either a guaranty check or a printed bid bond. An electronic bid bond may be used as the guaranty. Ensure the electronic bid bond meets the requirements of Section 2L.8.2., "Proposal Guaranty," and submit the electronic bid bond with the printed bid.

9.2.1. **Guaranty Check**. When used, make the check payable to the Owner. The check must be a cashier's check, money order, or teller's check drawn by or on a state or national bank, or a state or federally chartered credit union (collectively referred to as "bank"). The check must be dated on or before the date of the bid opening. Postdated checks will not be accepted. The type of check or money order must be indicated on the face of the instrument, except in the case of a teller's check, and the instrument must be no more than 90 days old. A check must be made payable at or through the institution issuing the instrument, be drawn by a bank and on a bank, or be payable at or through a bank. The Owner will not accept personal checks, certified checks, or other types of money orders.

9.2.2. **Bid Bond**. When a bond is used, use the bid bond form provided by the Owner. Submit the bid bond in the amount specified with the powers of attorney dated and attached. The bond must be dated on or before the date of the bid opening, bear the impressed seal of the Surety, and be signed by the Bidder or Bidders and an authorized individual of the Surety. As an alternative for JV Bidders, each Bidder may submit a separate bid bond completed as outlined in this Section. Bid bonds will only be accepted from Sureties authorized to execute a bond under and in accordance with state law.

9.3. **Submittal of Bid**. Place the completed proposal form and the proposal guaranty in a sealed envelope marked to indicate the contents.

When submitting by mail or delivery service, place the envelope in another sealed envelope and address as indicated in the official advertisement. It is the Bidder's responsibility to ensure that the sealed bid arrives at the location described on or before the time and date set for the bid opening. To be accepted, the bid must be in the hands of the Letting Official by that time of opening regardless of the method chosen for delivery.

9.4. **Revising the Proposal Form**. Make desired changes to the proposal form in ink, initial each change made, and submit the proposal to the Letting Official. Correction fluid or tape will be considered a change to the bid and requires the initials of the Bidder. The Owner will not revise a bid on behalf of a Bidder.

9.5. **Withdrawing a Bid**. Submit to the Letting Official conducting the letting a written request to withdraw a bid before the time and date set for the opening. The Owner will not accept oral requests. A written request must be signed and submitted to the Letting Official conducting the letting, with proof of identification. The request must be made by a person authorized to bind the Bidder or Bidders. In the case of a JV, the Owner will accept a request from any person authorized to bind a party to the JV. The Owner may require written delegation of authority to withdraw a bid when the individual sent to withdraw the bid is not authorized to bind the Bidder or Bidders.

10. OPENING AND READING OF BIDS

At the time, date, and location specified in the official advertisement, the Letting Official will publicly open and read bids.

11. TABULATING BIDS

11.1. **Official Total Bid Amount**. The Owner will sum the products of the quantities and the unit prices bid on the proposal form to determine the official total bid amount, except as provided in Section 2L.11.5., "Consideration of Unit Prices." The official total bid amount is the basis for determining the apparent low Bidder. The total bid amounts will be compared and the results made public.

11.2. **Consideration of Bid Format**. When a Bidder submits both an electronic bid and a printed bid that are responsive, the unit bid prices in the electronic bid will be used to determine the total bid amount. If the electronic bid is incomplete or nonresponsive, the printed bid will be used in the tabulation of the total bid amount.

If a Bidder submits two or more printed bids, all responsive bids will be tabulated. The bid with the lowest tabulation will be used to determine the total bid amount.

11.3. **Rounding of Unit Prices**. The Owner will round off all unit bids involving fractional parts of a cent to the nearest one-tenth cent ($0.001) in determining the amount of the bid as well as computing the amount due for payment of each item under the Contract. For rounding purposes, entries that contain five-hundredths of a cent ($0.0005) or more will be rounded up to the next highest tenth of a cent, while entries that contain less than five-hundredths of a cent will be rounded down to the next lowest tenth of a cent and in accordance with Section 2L.11.5., "Consideration of Unit Prices." Bids less than one-tenth of a cent ($0.001) will be rounded to one-tenth of a cent ($0.001). When credit items are included (negative unit prices), rounding is performed on the absolute value.

11.4. **Interpretation of Unit Prices**. The Owner will make a documented determination of the unit bid price if a unit bid price is illegible or conflicting in the case of replacement alternate items. The Owner's determination will be final.

11.5. **Consideration of Unit Prices**. Unit bid price entries such as no dollars and no cents, zero dollars and zero cents, or numerical entries of less than $0.001 will be tabulated as one-tenth of a cent ($0.001). Proposals in which unit bid prices have been left blank are incomplete and nonresponsive.

11.5.1. **Alternate Items**. If a proposal has a regular and corresponding alternate item or group of items, the proposal will be considered complete if:

- the regular item or group of regular items has unit prices entered,
- the alternate item or group of alternate items has unit prices entered, or
- both regular item or group of regular items and alternate item or group of alternate items have unit prices entered. The Owner will use the price bid for the regular or the alternate item, or group of items, that will result in the lowest cost to the State.

The bid will be considered incomplete and nonresponsive if:

- a regular item or group of regular items is left blank, or

- a corresponding alternate item or group of alternate items is left blank.

11.5.2. **Additive Alternate Items**. The Owner will sum the products of the quantities and the unit prices bid for the regular items on the proposal form to determine the total bid amount for the base bid. The official total bid amount will be determined by the summation of the base bid plus a predetermined order of additive alternate items, not to exceed the Owner's budgeted amount for the Contract. An estimate of the budgeted amount may be shown on the plans.

The Contract will identify the base bid work and additive alternate work to be performed. The Owner makes no guarantee that the additive alternate work will be required.

11.5.3. **A + B Bidding**. The official total bid amount will be determined by the summation of the Contract amount and the time element. The Owner will use the following formula to make the calculation:

A + B1 + B2 + BX + … + BT

The Contract amount, equal to A in the formula, is determined by the summation of the products of the approximate quantities shown in the proposal and the unit bid prices bid, and the time element, equal to B1, B2, BX (when phases are included as bid components), and BT (substantial completion of the project when included as a bid component), of the bid is determined by multiplying the number of working days bid to substantially complete the project, or phases, by the daily road-user cost (RUC) shown on the plans. When partial days are bid, they will be rounded up to the nearest whole day.

The formula above determines the low Bidder and establishes the Contract time or time for specific phases of the Contract.

11.5.4. **Rubber Additives**. For proposed Contracts without federal funds, if an alternate item for "Hot Asphalt-Rubber Surface Treatments" or "Hot-Mix Asphalt Concrete Pavement" that contains ground tire rubber is shown on the proposal form and the Bidder bids that alternate item, the amounts bid for "Hot Asphalt-Rubber" and "Aggregate" or "Hot-Mix Asphalt Concrete" will be reduced to 85% of the amounts actually bid. This reduction will only be used for the purposes of determining the lowest Bidder. To qualify, the ground tire rubber used must be produced from scrap tire ground in a facility in Texas. Payment for "Hot Asphalt-Rubber" and "Aggregate" or "Hot-Mix Asphalt Concrete" will be at the actual unit prices bid.

11.5.5. **Home State Bidding Preference**. For the purpose of determining the apparent low Bidder on proposed Contracts without federal funds, the Owner will select the option that results in the greatest bidding preference to the resident Bidder.

11.5.5.1. **Reverse Application of Non-Resident Bidder's Home State Bidding Preference**. The total bid amount will be based upon the reverse application of the non-resident Bidder's home state bidding preference, if any. This will also apply to another state's preference for a Bidder that offers materials grown, produced, processed, or manufactured in that state.

Any reverse application of the home state bidding preference will be the greater of the following:

- the amount by which a resident Bidder would be required to underbid the non-resident Bidder to obtain a comparable contract in the state in which the non-resident's principal place of business is located; or
- the amount by which a resident Bidder would be required to underbid the non-resident Bidder to obtain a comparable contract in the state in which a majority of the manufacturing relating to the Contract will be performed.

11.5.5.2. **Texas Home State Bidding Preference**. A Bidder will be considered the apparent low Bidder if the Bidder's home office is located in this state and their bid does not exceed an amount equal to 105% of the apparent low bid received from a Bidder whose home office is not located in this state. This will not apply to a Bidder from a bordering state whose state does not give a preference to a Bidder in a manner similar to this Section.

12. CONSIDERATION OF BID ERRORS

The Owner will consider a claim of a bid error by the apparent low Bidder if the following requirements have been met:

- a written notification is submitted to the Owner within 5 business days after the date the bid is opened and
- the submittal identifies the items of work involved and includes bidding documentation. The Owner may request clarification of submitted documentation.

The Owner will evaluate the claim of a bid error by the apparent low Bidder by considering the following:

- the bid error relates to a material item of work,
- the bid error amount is a significant portion of the total bid,
- the bid error occurred despite the exercise of ordinary care, and
- the delay of the proposed work will not impact cost and safety to the public.

Acceptance of the bid error claim by the Owner will result in the rejection of all bids. The erring Contractor will not be allowed to bid the project when it is re-let. Rejection of bids due to the Contractor's bid error may result in the application of remedial actions by the Owner.

13. TIE BIDS

If the official total bid amount for two or more Bidders is equal and those bids are the lowest submitted, each tie Bidder will be given an opportunity to withdraw their bid. If two or more tie Bidders do not withdraw their bids, the low Bidder will be determined by a coin toss or a series of coin tosses when there are more than two Bidders. If all tie Bidders request to withdraw their bids, no withdrawals will be allowed and the low Bidder will be determined by a coin toss or a series of coin tosses when there are more than two Bidders. The Letting Official will preside over the proceedings.

14. DISADVANTAGED BUSINESS ENTERPRISE (DBE)

The apparent low bidder must submit DBE commitment information on federally funded projects with DBE goals within 5 calendar days (as defined in 49 CFR Part 26, Subpart A) of bid opening. For a submission that meets the 5-day requirement, administrative corrections will be allowed.

If the apparent low Bidder fails to submit their DBE information within the specified timeframe, they will be deemed nonresponsive. The Bidder forfeiting the proposal guaranty will not be considered in future proposals for the same work unless there has been a substantial change in the design of the work. The Owner may recommend that the Commission:

- reject all bids, or
- award the Contract to the new apparent low Bidder, if the new apparent low Bidder has already submitted DBE information to the Owner.

If the new apparent low Bidder did not submit the required DBE information:

- the new apparent low Bidder will not be deemed nonresponsive,
- the new apparent low Bidder's guaranty will not be forfeited,
- the Owner will reject all bids,
- the new apparent low Bidder will remain eligible to receive future proposals for the same project, and
- the proposal guaranty of the original apparent low bidder will become the property of the Owner, not as a penalty, but as liquidated damages.

15. DEPARTMENT OF HOMELAND SECURITY (DHS) E-VERIFY SYSTEM

The Owner will not award a Contract to a Contractor that is not registered in the DHS E-Verify system. Remain active in E-Verify throughout the life of the Contract. In addition, in accordance with Article 8L.2., "Subcontracting," sixth paragraph, include this requirement in all subcontracts and require that subcontractors remain active in E-Verify until their work is completed.

If the apparent low Bidder does not appear in the DHS E-Verify system before award, the Contractor must submit documentation showing that they are compliant within 5 calendar days after bid opening. A Contractor that fails to comply or respond within the deadline will be declared nonresponsive. The Bidder forfeiting the proposal guaranty will not be considered in future proposals for the same work unless there has been a substantial change in the scope of the work.

The Owner may recommend to:

- reject all bids or
- award the Contract to the new apparent low Bidder, if the Owner is able to verify the Bidder's participation in the DHS E-Verify system.

If the Owner is unable to verify the new apparent low Bidder's participation in the DHS E-Verify system:

- the new apparent low Bidder will not be deemed nonresponsive,
- the new apparent low Bidder's guaranty will not be forfeited,
- the Owner will reject all bids,
- the new apparent low Bidder will remain eligible to receive future proposals for the same project, and
- the proposal guaranty of the original low bidder will become the property of the Owner, not as a penalty, but as liquidated damages.

Item 3L
Award and Execution of Contract

1. AWARD OF CONTRACT

The Owner or original award authority will award, reject, or defer the Contract within 90 days after the opening of the proposal. The Owner reserves the right to reject any or all proposals and to waive technicalities in the best interest of the Owner.

1.1. **Award**. The Owner or original award authority will award the Contract to the low Bidder as determined in accordance with Article 2L.11., "Tabulating Bids." The Owner may award a Contract to the second lowest Bidder when the following requirements have been met:

- the low Bidder withdraws their bid or fails to enter into Contract,
- the second lowest Bidder agrees to perform the work at the unit bid prices of the low Bidder,
- the Owner recommends in writing the award of the Contract to the second lowest Bidder, and
- the Owner's governing body agrees with the Owner recommendation for award to the second lowest Bidder.

1.2. **Rejection**. The Owner or original award authority will reject the Contract if:

- collusion may have existed among the Bidders. Collusion participants will not be allowed to bid future proposals for the same Contract,
- the low bid is mathematically and materially unbalanced. The Bidder will not be allowed to bid future proposals for the same Contract,
- the lowest bid is higher than the Owner's estimate, and re-advertising for bids may result in a lower bid,
- the low bid contains a bid error that satisfies the requirements and criteria in Article 2L.12., "Consideration of Bid Errors," or
- rejection of the Contract is in the best interest of the Owner.

1.3. **Deferral**. The Owner may defer the award or rejection of the Contract when deferral is in the best interest of the Owner.

2. RESCINDING OF AWARD

The Owner or original award authority reserves the right to cancel the award of any Contract before Contract execution with no compensation due when the cancellation is in the best interest of the Owner. The Owner will return the proposal guaranty to the Contractor.

3. DISADVANTAGED BUSINESS ENTERPRISE (DBE) AND SMALL BUSINESS ENTERPRISE (SBE)

Submit all DBE and SBE information in the timeframe specified when required by the proposal.

4. EXECUTION OF CONTRACT

Provide the following within 15 days after written notification of award of the Contract.

4.1. **Contract**. Execute the Contract as prescribed by the Owner.

4.2. **Bonds**. Bonds are required for public works contracts under the following circumstance:

1. A Bid or Proposal Bond is required in the amount of the bid submitted to the City of Laredo.
2. Performance Bond when the contract is in excess of $100,000, in a personal sum equal to 100% of the contract cost.
3. Payment or Labor and Material Bond when a contract is in excess of $50,000, each in a personal sum equal to 100% of the contract cost.

4.3. **Insurance**. For construction and building Contracts, submit a certificate of insurance showing coverages in accordance with the Contract requirements.

Insurances must cover the work for the duration of the Contract and must remain in effect until final acceptance. Provide project-specific insurance, not listed in Table 1, until acceptance of the work covered by the project-specific insurance or as approved by the Engineer. Failure to obtain and maintain insurance for the contracted work may result in suspension of work or default of the Contract. If the insurance expires and coverage lapses for any reason, stop all work until the Owner receives an acceptable certificate of insurance.

Provide the Owner with a certificate of insurance verifying the types and amounts of coverage shown in Table 1. The certificate of insurance must be in a form approved by the Texas Department of Insurance. Certificates of insurance for commercial general liability, auto liability, and workers' compensation must include the Contractor's prequalified name in the "Insured" field. Any certificate of insurance provided must be available for public inspection.

Contractor shall provide and continuously maintain the minimum insurance coverages set forth below during the term of its agreement with the City of Laredo; and Contractor shall require its subcontractors to purchase the same types and amounts of insurance, at a minimum, as set forth below with respect to statutory workers' compensation and liability insurance.

1. Commercial general liability standard ISO insurance at minimum combined single limits of $1,000,000 per-occurrence and $2,000,000 general aggregate for bodily injury and property damage, which coverage shall include: products/completed operations ($2,000,000 products/completed operations aggregate); XCU (explosion, collapse, underground) hazards; and contractual liability. Without limitation, the commercial general liability coverage must cover all operations required in the contract, as well as contractual liability for the indemnity obligations assumed by the Contractor in the contract. Coverage must be written on an occurrence form.

2. Workers' compensation insurance at statutory limits, including employers' liability coverage at minimum limits of $1,000,000 each-occurrence, each accident/$1,000,000 by disease each-occurrence/$1,000,000 by disease aggregate.

3. Commercial automobile liability insurance at a minimum combined single limit of $1,000,000 per-occurrence for bodily injury and property damage, including non-owned and hired car coverage and owned vehicles if any are owned .

4. Umbrella liability or following-form excess liability at minimum limits, reference page four for project costs over $1,000,000. Coverage must be at least as broad as the underlying commercial general liability, auto liability, and employer's liability.

5. Pollution Legal Liability if applicable

    a. Project costs of $1,000,000 to $10,000,000 and over $10,000,000; reference page four for limits.

    b. Contractors Pollution Liability:
    > Applies to operations that include the use, application, or consumption of pollutants.
    > Retro date shall not be later than the inception date of contract.
    > Contractual liability coverage to be included in contractor's pollution liability coverage.

    c. Environmental Liability
        i) Applies to asbestos and removal of other hazardous materials and/or repair, maintenance, installation, construction operations that are high hazard.
        > $5,000,000 per- claim/$10,000,000 aggregate minimum.
        > Retro date shall not be later than the inception date of contract.
        > Contractual liability coverage to be included in contractor's pollution liability coverage.
        > At a minimum, coverage must apply to on-premises and transit operations.

6. Professional liability applies to professional services which include but are not limited to design build contractors, engineers, and architects at minimum limits of $1,000,000 per-clairn/$2,000,000 annual aggregate. The retro date shall not be later than the inception date of the contract. Reference page four for limits based on project cost.

7. Builders Risk, if applicable:

    a. "All-risk" including collapse, flood, and earthquake, to be written on completed value form.

    b. Coverage to include limits of at least $250,000 for off-premises storage and transit of construction materials. Soft costs to be included at a minimum limit of $500,000.

    c. Thirty (30)-day occupancy clause to apply.

    d. No testing exclusion should apply.

With reference to the foregoing insurance requirements, Contractor shall specifically endorse applicable insurance policies as follows:

1. City of Laredo shall be named as an additional insured on a primary and non-contributory basis, regardless of the application of other insurance, with respect to all liability coverages, except for the professional liability and workers' compensation.

2. All liability policies shall contain no cross-liability exclusions or insured versus insured restrictions.

3. A waiver of subrogation in favor of City of Laredo shall be contained in all policies.

4. All insurance policies shall be endorsed to require the insurer to immediately notify City of Laredo of any material change in the insurance coverage.

5. All insurance policies shall be endorsed to the effect that City of Laredo will receive at least thirty(30) days' notice prior to cancellation or non-renewal of the insurance.

6. The additional insured coverage in the CGL policy in favor of City of Laredo must apply to the ongoing operations of Contractor for contract costs or up to $1,000,000 and expanded to include product s/completed operation for contract costs in excess of $1,000,000.

7. Required limits may be satisfied by any combination of primary and umbrella/excess liability insurances.

8. Contractor may maintain reasonable and customary deductibles, subject to approval by City of Laredo.

9. Insurance must be purchased from insurers that are financially acceptable to City of Laredo with a minimum A.M Best financial rating of A-:VII.

10. Coverage for commercial general liability, professional liability, and pollution legal liability must be maintained for at least one (I) to two (2) years after the project is completed.

11. For project s in excess of $10,000,000 in cost, a per-project aggregate limit must be included in the commercial general liability.

Table 1
Insurance Requirements

CONTRACT COST	Type of Insurance	LIMITS
Less than $1,000,000	Umbrella Liability Professional Liability	Not Required $1,000,000 Per-Claim/ $2,000,000 Aggregate
$1,000,000 to $5,000,000	Umbrella Liability Professional Liability	$4,000,000 Per-Occ $1,500,000 Per-Claim/ $3,000,000 Aggregate
$5,000,000 to $10,000,000	Umbrella Liability Professional Liability	$9,000,000 to $10,000,000 Per-Occ $1,500,000 Per-Claim/ $3,000,000 Aggregate to $2,000,000 Per Claim/$4,000,000 Aggregate
Over $10,000,000	Umbrella Liability Professional Liability	$10,000,000 or higher $2,000,000 Per-Clain/ $4,000,000 Aggregate Or Higher
$1,000,000 to $10,000,000	Contractor's Pollution Legal Liability	$1,000,000 Per-Claim/ $2,000,000 Aggregate
Over $10,000,000	Contractor's Pollution Legal Liability	$2,000,000 Per-Claim/ $4,000,000 Aggregate
TAIL COVERAGE		
$1,000,000 to $5,000,000	Commercial General Liability, Professional Liability, and Pollution Legal Liability	One (1) Year
$1,000,000 to $5,000,000	Commercial General Liability, Professional Liability, and Pollution Legal Liability	Two (2) Years
Any Contract Size	Hazardous Environmental Work	Two (2) Years

The Contractor shall not commence work under this Contract until he/she has obtained all the insurance required under this paragraph and such insurance has been approved by the Owner, nor shall the Contractor allow any subcontractor to commence work on his/her Sub-Contract until the insurance required of the Subcontractor has been so obtained and approved.

a. Compensation Insurance: The Contractor shall procure and shall maintain during the life of this Contract Workmen's Compensation Insurance as required by applicable State or Territorial law for all of his/her employees to be engaged in work at the site of the project under this Contract and, in case of any such work sublet, the 5 Contractor shall require the Subcontractor similarly to provide Workmen's Compensation Insurance for all of the latter's employees to be engaged in such work unless such employees are covered by the protection afforded by the Contractor's Workmen's Compensation Insurance. In the case where any class of employees engaged in hazardous work on the project under this Contract and is not protected under the Workmen's Compensation Statute, The Contractor shall provide and shall cause each Subcontractor to provide adequate employee's liability insurance for the protection of such of his/her employee as are not otherwise protected.

b. Contractor's Public Liability and Property Damage Insurance and Vehicle Liability Insurance: The Contractor shall procure and shall maintain during the life of his Contract: Contractor's Public Liability Insurance, Contractor's Property Damage Insurance and Vehicle Liability Insurance in the amount of not less than $200,000 for bodily injury, including accidental death, to any one person and an amount not less than $300,000 on account of any one occurrence: Property Damage in the amount not less than $100,000 per occurrence and $200,000 aggregate; and Vehicle Liability of $100,000 for any one person or $200,000 for each occurrence.

c. Subcontractor's Public Liability and Property Damage Insurance and Vehicle Liability Insurance: The Contractor shall either (1) require each of his/her Subcontractor to procure and shall maintain during the life of his /her Subcontractor, Subcontractor's Public Liability and Property Damage Insurance and Vehicle Liability Insurance of the type and in the amount specified in Subparagraph b. above or, (2) insure the activities of his/her Subcontractors in his/her policy specified in Subparagraph b. above.By signing the Contract, the Contractor certifies compliance with all applicable laws, rules, and regulations pertaining to workers' compensation insurance. This certification includes all subcontractors. Pay all deductibles stated in the policy. Subcontractors must meet the requirements shown in Table 2, either through their own coverage or through the Contractor's coverage.

d. Scope of Insurance and Special Hazards: The insurance required under Subparagraph b. and c. above shall provide adequate protection for the Contractor and his/her Subcontractor's, respectively, against damage claims which may arise from operations under this Contract, whether such operations be by the insured or by any one directly or indirectly employed by him/her and also against any of the special hazard which may be encountered in the performance of this Contract.

e. Builder's Risk Insurance (Fire and Extended Coverage): The Contractor shall procure and shall maintain during the life of this Contract Builder's Risk Insurance (Fire and Extended Coverage on a 100 percent (100%) completed value basis on the insurable portion of the project. The Owner, the Contractor, and Subcontractor (as their interests may appear), shall be named as the Insured.

f. Proof of Carriage of Insurance: The Contractor shall furnish the Owner with certificates showing the type, amount, class of operations covered, effective dates and dates of expiration of policies. Such certificates shall also contain substantially the following statement: "The Insurance covered by this certificate will not be cancelled or materially altered, except after ten (10) days written notice has been received by the Owner". The Owner, the Contractor, and Subcontractor (as their interests may appear), shall be named as the Insured.

g. The City of Laredo shall be named as an additional insured with respect to General Liability and Automobile Liability. A blanket waiver of subrogation in favor of the City of Laredo shall be contained in the Workers Compensation, and all liability policies.

The workers' compensation policy must include a waiver of subrogation endorsement in favor of the Owner.

For building-facilities contracts, provide all risk builder's risk insurance to protect the Owner against loss by storm, fire, or extended coverage perils on work and materials intended for use on the project, including the adjacent structure. Name the Owner under the Lost Payable clause.

For contracts with railroad requirements, see project-specific details for additional insurance requirements.

Provide a substitute Surety on the Contract bonds in the original full Contract amount within 15 days of notification if the Surety is declared bankrupt or insolvent, the Surety's underwriting limitation drops below the Contract amount or the Surety's right to do business is terminated by the Owner. The substitute Surety must be authorized by the laws of the Owner and acceptable to the Owner. Work will be suspended until a substitute Surety is provided. Working day charges will be suspended for 15 days or until an acceptable Surety is provided, whichever is sooner.

The work performed under this Section will not be measured or paid for directly, but will be subsidiary to pertinent Items.

4.4. **Business Ownership Information**. Submit the names and Social Security numbers of all individuals owning 25% or more of the firm, or firms in the case of a joint venture, on the Owner's form.

4.5. **Railroad Documents**. Provide all required documents for satisfaction of railroad requirements for projects that have work involving railroad right of way. Comply with the requirements of Article 5L.8., "Cooperation with Railroads."

5. FAILURE TO ENTER CONTRACT

If the Contractor fails to comply with all the requirements in Article 3L.4., "Execution of Contract," the proposal guaranty will become the property of the Owner, not as a penalty, but as liquidated damages. The Contractor forfeiting the proposal guaranty will not be considered in future proposals for the same work unless there has been a substantial change in design of the work.

6. APPROVAL AND EXECUTION OF CONTRACT

The Contract will be approved and signed under authority of the Owner.

7. RETURN OF PROPOSAL GUARANTY

The proposal guaranty check of the low Bidder will be retained until after the Contract has been rejected or awarded and executed. Bid bonds will not be returned.

8. BEGINNING OF WORK

Do not begin work until authorized in writing by the Owner.

Verify all quantities of materials shown on the plans before ordering.

9. ASSIGNMENT OF CONTRACT

Do not assign, sell, transfer, or otherwise dispose of the Contract or any portion of the rights, title, or interest (including claims) without the approval of the Owner or original award authority. The Owner must deem any proposed assignment justified and legally acceptable before the assignment can take place.

10. EXCLUDED PARTIES

The Contractor certifies by signing the Contract that the Contractor will not enter into any subcontract with a subcontractor that is debarred or suspended by the Owner or any federal agency.

Item 4L
Scope of Work

1. CONTRACT INTENT

The intent of the Contract is to describe the completed work to be performed. Furnish materials, supplies, tools, equipment, labor, and other incidentals necessary for the proper prosecution and completion of the work in accordance with Contract documents.

2. PRECONSTRUCTION CONFERENCE

Before starting work, schedule and attend a preconstruction conference with the Engineer. Failure to schedule and attend a preconstruction conference is not grounds for delaying the beginning of working day charges. The preconstruction conference may be scheduled with the safety preconstruction meeting described in Section 7L 2.2., "Safety Preconstruction Meeting" and the railroad coordination meeting described in Article 5L 8., "Cooperation with Railroads." Work with the Engineer to resolve or escalate all issues. Execute the project pledge and establish an issue escalation ladder.

2.1. **Project Pledge**. Contractor representatives at the level of foreman and above will certify in writing they will approach the construction of this project in a manner consistent with delivering a high-quality project in a safe, cost-effective, and timely manner, and they will be committed to not allowing personality conflicts or personal interests to interfere with providing the public with a quality project. Failure to uphold this commitment may result in grounds for removal from the project.

2.2. **Issue Resolution Process**. An issue is any aspect of the Contract where parties of the Contract do not agree. The individuals identified at the lowest level of the issue escalation ladder will initiate the issue resolution process by escalating any issue that remains unresolved within the timeframe outlined in the issue escalation ladder.

Work with the Engineer to resolve all issues during the course of the Contract. Refer to Article 4L 7., "Dispute or Claims Procedure," for all unresolved issues.

3. PARTNERING – NOT APPLICABLE

The intent of this Article is to promote an environment of trust, mutual respect, integrity, and fair dealing between the Owner and the Contractor.

Informal partnering does not make use of a facilitator and is led by the Engineer in charge of the work and the Contractor's counterpart, while formal partnering uses the services of a facilitator (internal or external).

3.1. **Procedures for Partnering Meetings and Format**. Informal partnering is required, unless formal partnering is mutually agreed upon instead of the informal partnering.

3.2. **Facilitators**. The facilitator is to act as a neutral party seeking to initiate cooperative working relationships. This individual must have the technical knowledge and ability to lead and guide discussions. Choose either an internal or external facilitator. The facilitator must be acceptable to the Engineer.

3.2.1. **Internal Facilitators**. An Owner or Contractor staff member may be selected as the facilitator at no additional cost to either party.

3.2.2. **External Facilitators**. A private firm or individual that is independent of the Contractor and the Owner may be selected as the facilitator. Submit the facilitator's name and estimated fees for approval before contracting with the facilitator.

3.3. **Meetings and Arrangements**. Coordinate with the Engineer for meeting dates and times, locations including third party facilities, and other needs and appurtenances including but not limited to audio or visual equipment. Make all meeting arrangements for formal partnering. Use Owner facilities or facilities in the vicinity of the project if available. Submit the estimated meeting costs for approval before finalizing arrangements.

Coordinate facilitator discussions before the partnering meeting to allow the facilitator time to prepare an appropriate agenda. Prepare a list of attendees with job titles and include critical Contractor, subcontractor, and supplier staff on the list. Provide the facilitator with the list of attendees and invite the attendees listed.

The Owner will invite and provide a list of attendees that includes, but is not limited to Owner, TxDOT, other local governments, law enforcement, railroad, and utility representatives.

Participate in additional partnering meetings as mutually agreed upon.

3.4. **Payment**. Expenses for labor, Contractor equipment, or overhead will not be allowed. Markups as prescribed in Article 9L 7., "Payment for Extra Work and Force Account Method," will not be allowed.

Informal partnering will be conducted with each party responsible for their own costs.

For formal partnering using internal facilitators, the Contractor will be responsible for arrangements and for expenses incurred by their internal facilitator, including but not limited to meals, travel, and lodging. Owner facilitators may be used at no additional cost.

For formal partnering using external facilitators, submit an invoice to the Engineer for reimbursement. The Owner will reimburse the Contractor for half of the eligible expenses as approved. For external facilitators not approved by the Owner but used at the Contractor's option, the Contractor will be responsible for all costs of the external facilitator.

For meeting facilities and appurtenances, submit an invoice to the Engineer for reimbursement. The Owner will reimburse the Contractor for half of the eligible expenses as approved.

4. CHANGES IN THE WORK

The Engineer reserves the right to make changes in the work, including addition, reduction, or elimination of quantities and alterations needed to complete the Contract. Perform the work as altered. These changes will not invalidate the Contract nor release the Surety. The Contractor is responsible for notifying the sureties of any changes to the Contract.

If the changes in quantities or the alterations do not significantly change the character of the work under the Contract, the altered work will be paid for at the Contract unit price. If the changes in quantities or the alterations significantly change the character of the work, the Contract will be amended by a change order. If no unit prices exist, this will be considered extra work and the Contract will be amended by a change order. Provide cost justification as requested, in an acceptable format.

Payment will not be made for anticipated profits on work that is eliminated.

Agree on the scope of work and the basis of payment for the change order before beginning the work. If there is no agreement, the Engineer may order the work to proceed under Article 9L 7., "Payment for Extra Work and Force Account Method," or by making an interim adjustment to the Contract. In the case of an adjustment, the Engineer will consider modifying the compensation after the work is performed.

A significant change in the character of the work occurs when:

- the character of the work for any item as altered differs materially in kind or nature from that in the Contract, or
- a major item of work varies by more than 25% from the original Contract quantity,

When the quantity of work to be done under any major item of the Contract is more than 125% of the original quantity stated in the Contract, then either party to the Contract may request an adjustment to the unit price on the portion of the work that is above 125%.

When the quantity of work to be done under any major item of the Contract is less than 75% of the original quantity stated in the Contract, then either party to the Contract may request an adjustment to the unit price.

If the changes require additional working days to complete the Contract, Contract working days will be adjusted in accordance with Item 8L, "Prosecution and Progress."

5. DIFFERING SITE CONDITIONS

During the progress of the work, differing subsurface or latent physical conditions may be encountered at the site. The two types of differing site conditions are defined as:

- those that differ materially from those indicated in the Contract, and
- unknown physical conditions of an unusual nature differing materially from those ordinarily encountered and generally recognized as inherent in the work provided for in the Contract.

Notify the Engineer in writing when differing site conditions are encountered. The Engineer will notify the Contractor in writing when the Owner discovers differing site conditions. Unless directed otherwise, suspend work on the affected items and leave the site undisturbed. The Engineer will investigate the conditions and determine whether differing site conditions exist. The Engineer will provide written notification of the determination whether or not an adjustment of the Contract is warranted. If the differing site conditions cause an increase or decrease in the cost or number of working days specified for the performance of the Contract, the Engineer will make adjustments, excluding the loss of anticipated profits, in accordance with the Contract. Additional compensation will be made only if the required written notice has been provided by either the Contractor or the Engineer.

6. REQUESTS FOR ADDITIONAL COMPENSATION AND DAMAGES

Notify the Engineer in writing of any intent to request additional compensation once there is knowledge of the basis for the request. An assessment of damages is not required to be part of this notice but is desirable. The intent of the written notice requirement is to provide the Engineer an opportunity to evaluate the request and to keep an accurate account of the actual costs that may arise. Minimize impacts and costs.

If written notice is not given, the Contractor waives the right to additional compensation unless the circumstances could have reasonably prevented the Contractor from knowing the cost impact before performing the work. Notice of the request and the documentation of the costs will not be construed as proof or substantiation of the validity of the request. Submit the request in enough detail to enable the Engineer to determine the basis for entitlement, adjustment in the number of working days specified in the Contract, and compensation.

Compensable damages occur when impacts that are the responsibility of the Owner result in additional costs to the Contractor that could not have been reasonably anticipated at the time of letting. Costs of performing additional work are not considered damages. Notify the Engineer in writing as soon as possible for Contractor damages. The intent is to reimburse the Contractor for actual expenses arising from a compensable impact. No profit or markups, other than labor burden, will be allowed. For damages, labor burden will be reimbursed at 35% unless the Contractor can justify higher actual cost. Justification for a higher percentage must be in conformance with the methodology provided by the Owner, submitted

separately for project overhead labor and direct labor, and determined and submitted by a Certified Public Accountant (CPA). Submit CPA-prepared labor burden rates directly to the Owner for approval.

The Owner will not consider fees and interest on requests for additional compensation and damages. Fees include, but are not limited to preparation, attorney, printing, shipping, and various other fees.

If the Contractor requests compensation for damages and the damages are determined to be compensable, then standby equipment costs and project overhead compensation will be based on the duration of the compensable damage and will be limited as follows.

6.1. **Standby Equipment Costs**. Payment will be made in accordance with Section 9L 7.1.4.3., "Standby Equipment Costs."

6.2. **Project Overhead**. Project overhead is defined as the administrative and supervisory expenses incurred at the work locations. When delay to project completion occurs, reimbursement for project overhead for the Contractor will be made using the following options at the Contractor's discretion:

- reimbursed at 6% (computed as daily cost by dividing 6% of the original Contract amount by the number of original Contract work days), or
- actual documented costs for the impacted period.

Project overhead for delays impacting subcontractors will be determined from actual documented costs submitted by the Contractor.

Time extensions and suspensions alone will not be justification for reimbursement for project overhead.

6.3. **Home Office Overhead**. The Owner will not compensate the Contractor for home office overhead.

7. DISPUTE OR CLAIMS PROCEDURE

The dispute resolution policy promotes a cooperative attitude between the Engineer, Contractor, and Contractor's subcontractors working through the Contractor. Emphasis is placed on resolving issues while they are still current, at the Owner's office, and in an informal manner. Open sharing of information is encouraged by all parties involved so the information provided completely and accurately reflects the issues and facts. If information is not shared, decisions may be limited to relying on the documentation that is available for review.

The Owner's goal is to have a dispute settled by the Engineer before elevating it as a claim to the Owner.

If a dispute cannot be resolved, initiate the Contract claim procedure by submitting a claim to the Owner.

The Contractor, or subcontractor through the Contractor, will file a Contract claim request and a detailed report that provides the basis for the claim. The detailed report will include relevant facts of the claim, cost or other data supporting the claim, a description of any additional compensation requested, and documents supporting the claim.

The claim must include the following certification: "I certify that the claim is made in good faith; that the supporting data are accurate and complete to the best of my knowledge and belief; that the amount requested accurately reflects the contract adjustment for which the Contractor believes the Owner is liable; and that I am duly authorized to certify the claim on behalf of the Contractor."

File a claim after completion of the Contract or when required for orderly performance of the Contract. For a claim resulting from enforcement of a warranty period, file the claim no later than 1 yr. after expiration of the warranty period. For all other claims, file the claim no later than 1 yr. after the date the Owner issues notice to the Contractor that they are in default, the date the Owner terminates the Contract, or the date of final acceptance of the Contract. It is the Contractor's responsibility to submit requests in a timely manner.

Item 5L
Control of the Work

1. AUTHORITY OF ENGINEER

The Engineer has the authority to observe, test, inspect, approve, and accept the work (either in writing or orally). The Engineer decides all questions about the quality and acceptability of materials, work performed, work progress, Contract interpretations, applicability of standard details, and acceptable Contract fulfillment. The Engineer has the authority to enforce and make effective these decisions.

- Unless noted elsewhere in the Contract or by the Engineer, payment for Contractor work is in accordance with the Contract requirements at that time. This payment does not eliminate the Contractor's responsibilities for the work as defined in Article 7L.17., "Contractor's Responsibility for Work," or Article 5L.12., "Final Acceptance."
- The Engineer acts as a referee in all questions arising under the terms of the Contract.
- The Engineer's decisions are final and binding.

The Engineer will pursue and document actions against the Contractor as warranted to address Contract performance issues. Contract remedies include, but are not limited to, the following:

- requiring the Contractor to remove and replace defective work, or reducing payment for defective work,
- removing an individual from the project,
- suspending the work without suspending working day charges,
- assessing standard liquidated damages to recover the Owner's administrative costs, including additional project-specific liquidated damages when specified in the Contract withholding estimates, and
- declaring the Contractor to be in default of the Contract

The Engineer will consider and document any events outside the Contractor's control that contributed to the failure to meet performance standards, including consideration of sufficient time.

Follow the issue escalation ladder if there is disagreement regarding the application of Contract remedies.

2. PLANS AND WORKING DRAWINGS

When required, provide working drawings to supplement the plans with all necessary details not included on the Contract plans. Prepare and furnish working drawings in a timely manner and obtain approval, if required, before the beginning of the associated work. For all working drawing submittal requirements, the Engineer may allow electronic and other alternative submission procedures. Have a licensed professional engineer sign, seal, and date the working drawings as shown in Table 1.

Prepare working drawings using United States standard measures in the English language. The routing of submittals for review and approval will be established at the preconstruction conference. The Contractor is responsible for the accuracy, coordination, and conformity of the various components and details of the working drawings. Owner approval of the Contractor's working drawings will not relieve the Contractor of any responsibility under the Contract. The work performed in accordance with this Article will not be measured or paid for directly, but will be subsidiary to pertinent Items.

Table 1
Signature and Approval Requirements for Working Drawings

Working Drawings For		Requires Licensed Professional Engineer's Signature, Seal, and Date	Requires Owner Approval
1. Alternate or optional designs submitted by Contractor		Yes	Yes
2. Supplementary shop and fabrication drawings for structural Items		No unless required on the plans	See applicable Item
3. Contractor-proposed temporary facilities that affect the public safety, not included on the plans		Yes	Yes
4. Form and falsework details	Bridges, retaining walls, and other major structures	Yes unless otherwise shown on the plans	No[1]
	Minor structures	No unless otherwise shown on the plans	No
5. Erection drawings		Yes	No[1,2]
6. Contractor-proposed major modifications to traffic control plan		Yes	Yes

1. The Engineer may require that the Contractor have a licensed professional engineer certify that the temporary works are constructed according to the sealed drawings.
2. Approval is required for items spanning over live traffic or where safety of the traveling public is affected, as determined by the Engineer.

Submit shop drawings electronically for the fabrication of structural items in accordance with the Owner's procedures and as directed for other items required by the Contract. References to 11 × 17-in. sheets in individual specifications for structural items imply electronic computer-aided design sheets.

3. CONFORMITY WITH PLANS, SPECIFICATIONS, AND SPECIAL PROVISIONS

Furnish materials and perform work in reasonably close conformity with the lines, grades, cross-sections, dimensions, details, gradations, physical and chemical characteristics of materials, and other requirements shown in the Contract. Reasonably close conformity limits are defined in the respective Items of the Contract or, if not defined, as determined by the Engineer. Obtain approval before deviating from the plans and approved working drawings. Do not perform work beyond the lines and grades shown on the plans or any extra work without the Engineer's authority. Work performed beyond the lines and grades shown on the plans or any extra work performed without authority is considered unauthorized and excluded from pay consideration. The Owner will not pay for material rejected due to improper fabrication, excess quantity, or any other reasons within the Contractor's control.

3.1. **Acceptance of Defective or Unauthorized Work**. When work fails to meet Contract requirements, but is adequate to serve the design purpose, the Engineer will decide the extent to which the work will be accepted and remain in place. The Engineer will document the basis of acceptance by letter and may adjust the Contract price.

3.2. **Correction of Defective or Unauthorized Work**. When work fails to meet Contract requirements and is inadequate to serve the design purpose, it will be considered defective. Correct, or remove and replace, the work at the Contractor's expense, as directed.

The Owner has the authority to correct or to remove and replace defective or unauthorized work. The cost may be deducted from any money due or to become due to the Contractor.

4. COORDINATION OF PLANS, SPECIFICATIONS, AND SPECIAL PROVISIONS

The specifications, accompanying plans, special provisions, change orders, and supplemental agreements are intended to work together and be interpreted as a whole.

Numerical dimensions govern over scaled dimensions. Special provisions govern over plans (including general notes), which govern over standard specifications and special specifications. Job-specific plan sheets govern over standard plan sheets.

However, in the case of conflict between plans (including general notes) and specifications regarding responsibilities for hazardous materials and traffic control in Items 1L–9L, "Local Government General Requirements and Covenants," and Item 502, "Barricades, Signs, and Traffic Handling," special provisions govern over standard specifications and special specifications, which govern over the plans.

Notify the Engineer promptly of any omissions, errors, or discrepancies upon discovery so necessary corrections and interpretations can be made. Failure to promptly notify the Engineer of discovered omissions, errors, or discrepancies will constitute a waiver of all Contract claims against the Owner for misunderstandings or ambiguities that result from the errors, omissions, or discrepancies.

5. COOPERATION OF CONTRACTOR

Cooperate with the Engineer. Respond promptly to instructions from the Engineer. Provide all information necessary for the successful completion of the Contract.

Designate in writing a competent, English-speaking Superintendent employed by the Contractor. The Superintendent must be experienced in the work being performed and capable of reading and understanding the Contract. Ensure the Superintendent is available at all times and able to receive instructions from the Engineer or authorized Owner representatives and to act for the Contractor. The Engineer may suspend work without suspending working day charges if a Superintendent is not available or does not meet the above criteria.

At the written request of the Engineer, immediately remove from the project any employee or representative of the Contractor or a subcontractor who, in the opinion of the Engineer, does not perform work in a proper and skillful manner or who is disrespectful, intemperate, disorderly, uncooperative, or otherwise objectionable. Do not reinstate these individuals without the written consent of the Engineer.

Furnish suitable machinery, equipment, and construction forces for the proper prosecution of the work.

Provide adequate lighting to address quality requirements and inspection of nighttime work.

6. COOPERATING WITH UTILITIES

Use established safety practices when working near utilities. Consult with the appropriate utilities before beginning work. Notify the Engineer immediately of utility conflicts. The Engineer will decide whether to adjust utilities or adjust the work to eliminate or lessen the conflict. Unless otherwise shown on the plans, the Engineer will make necessary arrangements with the utility owner when utility adjustments are required.

Use work procedures that protect utilities or appurtenances that remain in place during construction. Cooperate with utility companies to remove and rearrange utilities to avoid service interruption or duplicate work by the utility companies. Allow utilities access to the right of way.

Immediately notify the appropriate utility of service interruptions resulting from damage due to construction activities. Cooperate with utilities until service is restored. Maintain access to fire hydrants when necessary.

7. COOPERATION BETWEEN CONTRACTORS

Cooperate and coordinate with other Contractors working within the limits or adjacent to the limits.

8. COOPERATION WITH RAILROADS

Plan and prosecute portions of the work involving a railway to avoid interference with or hindrance to the railroad company.

If the work is on railroad right of way, do not interfere with the operation of the railroad company's trains or other property.

8.1. **Railroad Coordination Meeting**. When shown on the plans or directed by the Engineer, schedule and attend a railroad coordination meeting with the Engineer before beginning work or as agreed upon (may be a part of the preconstruction conference described in Article 4L.2., "Preconstruction Conference"). Prepare a list of attendees and invite personnel, including, but not limited to Owner, Contractor, subcontractor, and railroad representatives.

Provide the invitation to the railroad representatives at least 21 calendar days before the railroad coordination meeting.

8.2. **Project-Specific Information**. Refer to project-specific plan sheets infa the Contract for specific information concerning the work to be completed by the Contractor and the railroad within railroad right of way; railroad right of way locations impacted by construction; percentage of Contract work at each location; train movements at each location; and requirements for railroad insurance, flagging, and Right of Entry (ROE) Agreements.

8.3. **Right of Entry Agreement by the Owner**. When shown on the plans, the process for obtaining a fully executed ROE Agreement is as follows.

- The Owner will send the unexecuted ROE Agreement to the Contractor with the unexecuted Contract.
- Partially execute the ROE Agreement and return it to the Owner with the partially executed Contract and required insurance.
- The Owner will coordinate with the railroad company regarding the further execution of the ROE Agreement and associated fees. The Owner will pay any ROE Agreement fees directly to the railroad company.
- Once the Owner has received the fully executed ROE Agreement from the railroad company, the Owner will forward the fully executed ROE Agreement to the Contractor.

8.4. **Right of Entry Agreement by the Contractor**. When shown on the plans, contact the railroad company to obtain the ROE Agreement before beginning work on the Contract.

Provide the required insurance to the Owner before beginning work on the Contract.

Execute the ROE Agreement and pay any associated fees to the railroad company. Provide a copy of the fully executed ROE Agreement to the Owner.

9. CONSTRUCTION SURVEYING

Use Method C unless otherwise specified in the Contract. Upon request, the Engineer will allow the Contractor to copy available earthwork cross-sections, computer printouts or data files, and other information necessary to establish and control work. Preserve all control points, stakes, marks, and right of way markers. Assume cost and responsibility of replacing disturbed control points, stakes, marks, and right of way markers damaged by the Contractor's or its subcontractor's operations. If the Owner repairs disturbed control points, stakes, marks, or right of way markers, the cost of repair may be deducted from money due or to become

due to the Contractor. Replace right of way markers under the direction of an RPLS. This work performed under this Article will not be measured or paid for directly, but will be subsidiary to pertinent Items.

The Engineer reserves the right to make measurements and surveys to determine the accuracy of the work and determine pay quantities. The Engineer's measurements and surveys do not relieve the Contractor's responsibility for accuracy of work. Allow the Engineer adequate time to verify the surveying.

9.1. **Method A**. The Engineer will set control points for establishing lines, slopes, grades, and centerlines and for providing both vertical and horizontal control.

At minimum, provide a controlling pair of monument points at both the beginning and end of construction project for projects less than 2 mi. in length. For projects greater than 2 mi. in length, monuments will be set in pairs at a minimum of 2 mi. based on the overall length of the project. Use these control points as reference to perform the work.

Furnish materials, equipment, and qualified workforce necessary for the construction survey work. Place construction points, stakes, and marks at intervals sufficient to control work to established tolerances. Place construction stakes at intervals of no more than 100 ft., or as directed. Place stakes and marks so as not to interfere with normal maintenance operations.

9.2. **Method B**. The Engineer will set adequate control points, stakes, stationing, and marks to establish lines, slopes, grades, and centerlines. Furnish additional work, stakes, materials, and templates necessary for marking and maintaining points and lines.

9.3. **Method C**. Set adequate control points, stakes, and marks to establish lines, slopes, grades, and centerlines. Place construction points, stakes, and marks at intervals sufficient to control work to established tolerances. Place construction stakes at intervals of no more than 100 ft., or as directed. Place stakes and marks so as not to interfere with normal maintenance operations.

10. INSPECTION

Inspectors are authorized representatives of the Engineer. Inspectors are authorized to examine all work performed and materials furnished, including preparation, fabrication, and material manufacture. Inspectors inform the Contractor of failures to meet Contract requirements. Inspectors may reject work or materials and may suspend work until any issues can be referred to and decided by the Engineer. The Engineer may authorize Inspectors to adjust the traffic control. Inspectors cannot alter, add, or waive Contract provisions, issue instructions contrary to the Contract, act as foremen for the Contractor, or interfere with the management of the work. Inspection or lack of inspection will not relieve the Contractor from obligation to provide materials or perform the work in accordance with the Contract.

Provide safe access to all parts of the work and provide information and assistance to the Engineer to allow a complete and detailed inspection. Give the Engineer sufficient notice to inspect the work. Work performed without suitable inspection, as determined by the Engineer, may be ordered removed and replaced at Contractor's expense. Remove or uncover portions of finished work as directed. Once inspected, restore work to Contract requirements. If the uncovered work is acceptable, the costs to uncover, remove, and replace or make good the parts removed will be paid for in accordance with Article 4L.4., "Changes in the Work." If the work is unacceptable, assume all costs associated with repair or replacement, including the costs to uncover, remove, and replace or make good the parts removed.

When a government entity, utility, railroad company, or other entity accepts or pays a portion of the Contract, that organization's representatives may inspect the work but cannot direct the Contractor. The right of inspection does not make that entity a party to the Contract and does not interfere with the rights of the parties to the Contract.

11. FINAL CLEANUP

Upon completion of the work, remove construction project litter, debris, objectionable material, temporary structures, excess materials, and equipment from the work locations. Clean and restore property damaged by the Contractor's operations during the prosecution of the work. Leave the work locations in a neat and presentable condition.

Remove from the right of way cofferdams, construction buildings, material and fabrication plants, temporary structures, excess materials, and debris resulting from construction. Where work is in a stream, remove debris to the ground line of the bed of the stream. Leave stream channels and rights of way in a neat and presentable condition. Clean structures to the flow line or the elevation of the outfall channel, whichever is higher. Dispose of all excess material in accordance with federal, state, and local regulations.

The work performed under this Article will not be paid for directly, but will be subsidiary to Items of the Contract.

12. FINAL ACCEPTANCE

12.1. **Routine Maintenance Contracts**. Not applicable to Locally Let projects.

12.2. **Construction Contracts**. Final acceptance is made when all work is complete and the Engineer, in writing, accepts all work for the work locations in the Contract. Final acceptance relieves the Contractor from further Contract responsibilities.

12.2.1. **Work Completed**. Work completed must include work for vegetative establishment and maintenance, test and performance periods, and work to meet the requirements of Article 5L.11., "Final Cleanup."

12.2.2. **Final Inspection**. After all work is complete, the Engineer in charge of the work will request a final inspection by the Engineer authorized to accept the work.

The final inspection will be made as soon as possible and not later than 10 calendar days after the request. No working day charges will be made between the date of request and final inspection.

After the final inspection, if the work is satisfactory, the Engineer will notify the Contractor in writing of the final acceptance of the work. If the final inspection finds any work to be unsatisfactory, the Engineer will identify in writing all deficiencies in the work requiring correction. Correct the deficiencies identified. Working day charges will resume if these deficiencies are not corrected within 7 calendar days, unless otherwise authorized by the Engineer. Upon correction, the Engineer will inspect to verify that all deficiencies were corrected satisfactorily. The Engineer will provide written notice of the final acceptance.

12.2.3. **Final Measurement**. Final measurements and pay quantity adjustments may be made after final acceptance. Final acceptance will not be held for final measurements or pay quantity adjustments.

12.2.4. **Removal of Traffic Control Devices**. Remove any remaining construction traffic control devices and advance warning signs upon final acceptance or as directed.

12.3. **Multiple Work Orders**. Not applicable to Locally Let projects.

Item 6L
Control of Materials

1. SOURCE CONTROL

Use only materials that meet Contract requirements. Unless otherwise specified or approved, use new materials for the Work. Secure the Engineer's approval of the proposed source of materials to be used before their delivery. Materials can be approved at a supply source or staging area but may be inspected in accordance with Article 6L.4., "Sampling, Testing, and Inspection."

1.1. **Buy America**. Comply with the latest provisions of Buy America pertaining to steel and iron in accordance with 23 CFR § 635.410. Use steel or iron materials manufactured in the United States except when waived in accordance with Section 6L 1.2., "Buy America Exceptions."

Submit a notarized original of the TxDOT FORM D-9-USA-1 (Department Form 1818 or equivalent) with the proper attachments for verification of compliance.

Manufacturing includes any process that modifies the chemical content, physical shape or size, or final finish of a product. The manufacturing process begins with initial melting and mixing and continues through fabrication (e.g., cutting, drilling, welding, and bending) and coating (e.g., paint, galvanizing, and epoxy).

1.2. **Buy America Exceptions**. Use of iron and steel manufactured in the United States is required unless the material meets an exception below.

- A waiver exists exempting the material from Buy America compliance.
- The total value of foreign iron and steel products, including delivery, does not exceed 0.1% of the total Contract cost or $2,500, whichever is greater. The Contractor must provide documentation showing under threshold in advance for the Engineer's consideration.
- Foreign iron or steel may be allowed when the Contract contains an alternate item for a foreign source iron or steel product and the Contract is awarded based on the alternate item.
- The materials are temporarily installed or are supplies, tools, and equipment not incorporated into the project. Temporarily installed means the materials and products must be removed at the end of the project or may be removed at the Contractor's convenience with the Engineer's approval.

1.3. **Buy Texas**. Not Applicable.

2. MATERIAL QUALITY

Correct or remove materials that fail to meet Contract requirements or that do not produce satisfactory results. Reimburse the Owner for cost incurred if additional sampling and testing are required by a change of source.

Materials not meeting Contract requirements will be rejected unless the Engineer approves corrective actions. Upon rejection, immediately remove and replace rejected materials.

If the Contractor does not comply with this Article, the Owner may remove and replace defective material. The cost of testing, removal, and replacement will be deducted from the payments due to the Contractor.

3. MANUFACTURER WARRANTIES

Transfer to the Owner warranties and guarantees required by the Contract or received as part of normal trade practice.

4. SAMPLING, TESTING, AND INSPECTION

Incorporate into the work only material that has been inspected, tested, and accepted by the Engineer. Remove, at the Contractor's expense, materials from the work locations that are used without prior testing and approval or written permission of the Engineer.

The material requirements and standard test methods in effect at the time the proposed Contract is advertised govern. Unless otherwise specified, the Engineer will perform testing at Owner's expense. In addition to facilities and equipment required by the Contract, furnish facilities and calibrated equipment required for tests to control the manufacture of construction items. If requested, provide a complete written statement of the origin, composition, and manufacture of materials.

All materials used are subject to inspection or testing at any time during preparation or use. Material that has been tested and approved at a supply source or staging area may be inspected or tested before or during incorporation into the work and rejected if it does not meet Contract requirements. Copies of test results are available upon request. Do not use material that, after approval, becomes unfit for use.

Unless otherwise specified in the Contract, all testing must be performed within the United States and witnessed by the Engineer. If materials or processes require testing outside the contiguous 48 United States, reimburse the Owner for inspection expenses.

5. PLANT INSPECTION AND TESTING

The Engineer may but is not obligated to inspect materials at the acquisition or manufacturing source. Material samples will be obtained and tested for compliance with quality requirements.

If inspection is at the plant, meet the following conditions unless otherwise specified:

- cooperate fully and assist the Engineer during the inspection,
- ensure the Engineer has full access to all parts of the plant used to manufacture or produce materials,
- in accordance with pertinent items and the Contract provide a facility at the plant for use by the Engineer as an office or laboratory
- provide and maintain adequate safety measures and restroom facilities, and
- furnish and calibrate scales, measuring devices, and other necessary equipment in accordance with the Contract.

The Engineer may provide inspection for periods other than daylight hours if:

- continuous production of materials for Owner's use is necessary due to the production volume being handled at the plant, and
- the lighting is adequate to allow satisfactory inspection.

6. STORAGE OF MATERIALS

Store and handle materials to preserve their quality and fitness for the work. Store materials so that they can be easily inspected and retested. Place materials under cover, on wooden platforms, or on other hard, clean surfaces as necessary or when directed.

Obtain approval to store materials on the right of way. Storage space off the right of way is at the Contractor's expense.

7. OWNER-FURNISHED MATERIAL

The Owner will supply materials as shown on the plans. The cost of handling and placing materials supplied by the Owner will not be paid for directly, but will be subsidiary to the Item in which they are used. Assume responsibility for materials upon receipt.

8. USE OF MATERIALS FOUND ON THE RIGHT OF WAY

Material found in the excavation areas and meeting the Owner's specifications may be used in the work. This material will be paid for at the Contract bid price for excavation and under the Item for which the material is used.

Do not excavate or remove any material from within the right of way that is not within the limits of the excavation without written permission. If excavation is allowed within a right of way project-specific location, replace the removed material with suitable material at no cost to the Owner as directed.

9. RECYCLED MATERIALS

The Owner will not allow hazardous wastes, as defined in 30 TAC § 335, proposed for recycling to be used on the project. Use nonhazardous recyclable materials (NRMs) only if the specification for the Item does not disallow or restrict use. Determine whether NRMs are regulated under 30 TAC §§ 312, 330, 332, 334, or 335, and comply with all general prohibitions and requirements. Use NRMs in accordance with DMS-11000, "Evaluating and Using Nonhazardous Recyclable Materials Guidelines," and furnish all documentation in the manner prescribed by the Owner.

10. HAZARDOUS MATERIALS

Comply with the requirements of Article 7L.12., "Responsibility for Hazardous Materials."

Notify the Engineer immediately when a visual observation or odor indicates that materials on sites owned or controlled by the Owner may contain hazardous materials. Except when the contract includes bid items for the Contractor to remove hazardous materials, the Owner is responsible for testing, removing, and disposing of hazardous materials not introduced by the Contractor. The Engineer may suspend work wholly or in part during the testing, removing, or disposing of hazardous materials, except in the case where hazardous materials are introduced by the Contractor.

Use materials that are free of hazardous materials. Notify the Engineer immediately if materials are suspected to contain hazardous materials. If materials delivered to the project by the Contractor are suspected to contain hazardous materials, have an approved commercial laboratory test the materials for the presence of hazardous materials as approved. Remove, remediate, and dispose of any of these materials found to contain hazardous materials. The work required to comply with this Section will be at the Contractor's expense if materials are found to contain hazardous materials. Working day charges will not be suspended and extensions of working days will not be granted for activities related to handling hazardous material introduced by the Contractor. If suspected materials are not found to contain hazardous materials, the Owner will reimburse the Contractor for hazardous materials testing and will adjust working day charges if the Contractor can show that this work impacted the critical path.

10.1. **Painted Steel Requirements**. Coatings on existing steel contain hazardous materials unless otherwise shown on the plans. Remove paint and dispose of steel coated with paint containing hazardous materials in accordance with the following.

Removing Paint from Steel. For contracts that are specifically for painting steel, include the cleaning and painting of steel under Item 446, "Field Cleaning and Painting Steel," as a pay item. Perform work in accordance with that Item.

For projects where paint must be removed to allow for the dismantling of steel or to perform other work, the Owner will provide for a separate contractor (third party) to remove paint containing hazardous materials before or during the Contract. Remove paint covering existing steel shown not to contain hazardous materials in accordance with Item 446.

10.1.1. **Removal and Disposal of Painted Steel**. For steel able to be dismantled by unbolting, paint removal will not be performed by the Owner. The Owner will remove paint, at locations shown on the plans or as agreed, for the Contractor's cutting and dismantling purposes. Use Owner-cleaned locations for dismantling when provided or provide own means of dismantling at other locations.

Painted steel to be retained by the Owner will be shown on the plans. For painted steel that contains hazardous materials, dispose of the painted steel at a steel recycling or smelting facility unless otherwise shown on the plans. Maintain and make available to the Engineer invoices and other records obtained from the facility showing the received weight of the steel and the facility name. Dispose of steel that does not contain hazardous material coatings in conformance with federal, state, and local regulations.

10.2. **Asbestos Requirements**. The plans will indicate locations or elements where asbestos-containing materials (ACMs) are known to be present. Where ACMs are known to exist or where previously unknown ACM has been found, the Owner will arrange for abatement by a separate contractor before or during the Contract. Notify the Engineer of proposed dates of demolition or removal of structural elements with ACM at least 60 days before beginning work to allow the Owner sufficient time for abatement.

The Texas Department of State Health Services (DSHS), Asbestos Programs Branch, is responsible for administering the requirements of the National Emissions Standards for Hazardous Air Pollutants, (NESHAP), in accordance with 40 CFR Part 61, Subpart M, and the Texas Asbestos Health Protection Rules (TAHPR). Based on EPA guidance and regulatory background information, bridges are considered to be a regulated "facility" under NESHAP; therefore, federal standards for demolition and renovation apply.

The Owner is required to notify DSHS at least 10 working days (by postmarked date) before initiating demolition or renovation of each structure shown on the plans. If the actual demolition, renovation, or removal date is changed or delayed, notify the Engineer in writing of the revised dates in sufficient time to allow for the Owner's notification to DSHS to be postmarked at least 10 days in advance of the actual work.

The Owner retains the right to determine the actual advance notice needed for the change in date to address post office business days and staff availability.

10.3. **Asbestos or Lead Abatement**. Provide traffic control as shown on the plans, and coordinate and cooperate with the third party and the Owner for managing or removing hazardous materials. Work for the traffic control shown on the plans and coordination work will not be paid for directly, but will be subsidiary to pertinent Items.

11. SURPLUS MATERIALS

Take ownership of surplus materials unless otherwise shown on the plans or directed. Remove and dispose of materials in conformance with federal, state, and local regulations. If requested, provide an appropriate level of documentation to verify proper disposal. When materials are disposed of on private property, provide written authorization from the property owner for the use of the property for this purpose upon request.

Item 7L
Legal Relations and Responsibilities

1. ETHICS – NOT APPLICABLE TO LOCALLY LET PROJECTS

2. SAFETY

2.1. **Safety Point of Contact**. Designate, in writing, a Contractor Safety Point of Contact (CSPOC). The Owner will assign an employee for their point of contact designated as Owner's Safety Point of Contact OSPOC. The Contract requires that the Contractor's and subcontractor's employees use the appropriate personal protective equipment (PPE) (e.g., hardhats, safety vests, and protective toe footwear) to meet regulations.

The Contractor will require that crew leaders and foremen (including subcontractors) have attended the required training.

2.2. **Safety Preconstruction Meeting**. In cooperation with the Engineer, schedule and attend a safety preconstruction meeting (may be a part of the preconstruction conference in accordance with Article 4L.2., "Preconstruction Conference"). Attendees for this safety preconstruction meeting will be:

- the Contractor,
- subcontractors,
- the Owner,
- local law enforcement, and
- other personnel who play an active role on the project.

2.3. **Safety Contingency**. To improve the effectiveness of traffic handling and enhance safety during the course of this project, a safety contingency fund may have been included in the project budget for traffic control plan adjustments and other safety-related improvements.

Costs associated with the adjustments or improvements will be paid for in accordance with Article 9L.7., "Payment for Extra Work and Force Account Method." Article 9L.7., "Payment for Extra Work and Force Account Method," is not intended to be used in lieu of bid items established by the Contract.

2.4. **Public Safety and Convenience**. In accordance with the Contract and as directed, provide for the safety and convenience of the public and property. Keep existing roadways open to traffic or construct and maintain detours and temporary structures for safe public travel. Manage construction to minimize disruption to traffic. Maintain the roadway in a good and passable condition, including proper drainage, and provide for ingress and egress to adjacent property.

If the construction of the project requires the closing of a roadway, as directed, coordinate the closure with the Engineer and work to ensure all lanes and ramps possible are available during peak traffic periods before, during, and after significant traffic generator events to avoid any adverse economic impact on the municipalities during:

- dates or events as shown on the plans, and
- other dates as directed.

Store all equipment not in use in a manner and at locations that will not interfere with the safe passage of traffic.

If the Engineer determines that any of the requirements of this Article have not been met, the Engineer may take corrective action. This will not change the legal responsibilities set forth in the Contract. The cost to the Owner for this work will be deducted from any money due or to become due to the Contractor.

2.5. **Use of Blue Warning Lights**. Texas Transportation Code § 547.105 authorizes the use of warning lights to promote safety and provides an effective means of gaining the traveling public's attention as they drive in areas where construction crews are present. To influence the public to move over when high-risk construction activities are taking place, minimize the use of blue warning lights. These lights must be used only while performing work on or near the travel lanes or shoulder where the traveling public encounters construction crews that are not protected by a standard work zone setup, such as a lane closure, a shoulder closure, or one-way traffic control. Refrain from leaving the warning lights engaged while traveling from one work location to another or while parked on the right of way away from the pavement or a work zone.

2.6. **Barricades, Signs, and Traffic Handling**. Comply with the requirements of Item 502 "Barricades, Signs, and Traffic Handling," and as directed. Provide traffic control devices as shown on the plans and in accordance with the TMUTCD. When authorized or directed, provide additional signs or traffic control devices not required by the plans.

If an unexpected situation arises that causes the Contractor to believe that the traffic control should be changed, make all reasonable efforts to promptly contact the Engineer. Take prudent actions until the Engineer can be contacted.

The Engineer will inspect the traffic control devices. Comply with the results of the inspection in the prescribed timeframe.

The work performed and materials furnished in accordance with this Section and Item 502 have no bearing on the prosecution of Items 1L–10L, "General Requirements and Covenants," of the Contract. This includes, but is not limited to installing, relocating, and removing project limit advance warning signs.

2.6.1. **Contractor Responsible Person and Alternate**. Designate in writing a Contractor's Responsible Person (CRP) and an alternate to be the representative of the Contractor who is responsible for taking or directing corrective measures regarding the traffic control. The CRP or alternate must be accessible by telephone 24 hr. per day and able to respond when notified. The CRP and alternate must comply with the requirements of Section 7L.2.6.5., "Training."

2.6.2. **Flaggers**. Designate, in writing, a flagger instructor who will serve as a flagging supervisor and is responsible for training and assuring that all flaggers are qualified to perform flagging duties. Certify to the Engineer that all flaggers will be trained and make available upon request a list of flaggers trained to perform flagging duties.

Provide flaggers as directed. Flaggers must be courteous and able to effectively communicate with the public. When directing traffic, flaggers must dress appropriately; wear high-visibility safety apparel; use flags, signs, stop-slow paddles, and other hand-signaling devices; and follow the flagging procedures in the TMUTCD. Comply with the requirements of Section 7L.2.6.5., "Training."

2.6.3. **Law Enforcement Personnel**. Provide uniformed law enforcement personnel with patrol vehicles as directed. Document the work zone traffic services provided in the manner prescribed by the Owner. Law enforcement personnel providing work zone traffic services must be trained for the service they perform. Comply with Section 7L.2.6.5., "Training."

2.6.4. **Other Work Zone Personnel**. Workers involved with traffic control, including the maintenance of the traffic control, must comply with the requirements of Section 7L.2.6.5., "Training."

2.6.5. **Training.** Train workers involved with the traffic control using Department-approved training as shown on the "Traffic Control Training" MPL.

Coordinate enrollment, pay associated fees, and successfully complete Department-approved training or Contractor-developed training. Training is valid for the period prescribed by the provider. Except for law enforcement personnel training, refresher training is required every 4 yr. from the date of completion unless otherwise specified by the course provider. The Engineer may require training at a specified frequency instead of the period prescribed based on the Owner's needs. Training and associated fees will not be measured or paid for directly, but will be subsidiary to pertinent Items.

Certify to the Engineer that workers involved in traffic control and other work zone personnel have been trained and make available upon request a copy of the certification of completion to the Engineer. The certification of completion includes:

- name of provider and course title,
- name of participant,
- date of completion, and
- date of expiration.

Where Contractor-developed training or a TxDOT-approved training course does not produce a certification, maintain a log of attendees. Make the log available upon request. Provide a log that is legible and includes:

- printed name and signature of participant,
- name and title of trainer, and
- date of training.

2.6.5.1. **Contractor-Developed Training**. Develop and deliver Contractor-developed training meeting the minimum requirements established by the Owner. The outline for this training must be submitted to the Engineer for approval at the preconstruction meeting. The CRP or designated alternate may deliver the training instead of the TxDOT-approved training. The work performed and materials furnished to develop and deliver the training will not be measured or paid for directly, but will be subsidiary to pertinent Items.

2.6.5.1.1. **Flagger Training Minimum Requirements**. A Contractor's certified flagging instructor is permitted to train other flaggers.

2.6.5.1.2. **Other Contractor-Developed Training for Other Work Zone Personnel**. For other work zone personnel, the Contractor may provide training meeting the curriculum described below instead of TxDOT-approved training.

Minimum curriculum for Contractor-provided training is as follows.

Contractor-developed training must provide information on the use of PPE, occupational hazards and health risks, and other pertinent topics related to traffic management. The type and amount of training will depend on the job duties and responsibilities. Develop training applicable to the work being performed. Develop training to include the following topics.

- Adopt a company safety motto: "The Life You Save May Be Your Own," or similar.
- Purpose of the training includes the following.
  - "It's the Law."
  - Make work zones safer for workers and motorists.
  - Understand what is needed for traffic control.
  - Save lives including your own.
- Personal and co-worker safety includes the following.
  - **High-Visibility Safety Apparel**. Discuss compliant requirements; inspect regularly for fading and reduced reflective properties; if night operations are required, discuss the additional and appropriate required apparel in addition to special night work risks; and if moving operations are underway, discuss appropriate safety measures specific to the situation and traffic control plan.

- **Blind Areas**. A blind area is the area around a vehicle or piece of construction equipment not visible to the operators, either by line of sight or indirectly by mirrors. Discuss the "Circle of Safety" around equipment and vehicles; use of spotters; maintaining eye contact with equipment operators; and use of hand signals.
- **Runovers and Backovers**. Remain alert at all times; keep a safe distance from traffic; avoid turning your back to traffic, and if you must, then use a spotter; and stay behind protective barriers, whenever possible. It is not safe to sit on or lean against a concrete barrier; these barriers can deflect 4 ft. or more when struck by a vehicle.
- Look out for each other and warn co-workers.
- Be courteous to motorists.
- Do not run across active roadways.
- Workers must obey traffic laws and drive courteously while operating vehicles in the work zones.
- Workers must be made aware of company distracted driving policies.

■ **Nighttime Operations**. Focus on projects with a nighttime element.

■ **Traffic Control Training**. Basics of traffic control include the following.

- Identify work zone traffic control supervisor and other appropriate persons to report issues to when they arise.
- Emphasize that work zone traffic control devices must be in clean and undamaged condition. If devices have been hit but not damaged, return them to their correct place and report to the traffic control supervisor. If devices have been damaged, replace with new devices and report to the traffic control supervisor. If devices are dirty, faded, or have missing or damaged reflective tape, clean or replace them and report to the traffic control supervisor. Show examples of unacceptable device conditions. Discuss various types of traffic control devices to be used and where spacing requirements can be found.
- **Channelizing Devices and Barricades with Slanted Stripes**. Stripes must slant in the direction in which you want traffic to stay or move; demonstrate this with a device.
- **Traffic Queuing**. Workers must be made aware of traffic queuing and the dangers created by it. Workers must be instructed to immediately notify the traffic control supervisor and other supervisory personnel if traffic is queuing beyond advance warning sign and devices or construction limits.
- **Signs**. Signs must be straight and not leaning. Report problems to the traffic control supervisor or other as designated for immediate repair. Covered signs must be fully covered. If covers are damaged or out of place, report to the traffic control supervisor or other as designated.

3. LAWS TO BE OBSERVED

Comply with all federal, state, and local laws, ordinances, and regulations that affect the performance of the work. The Contractor is not required to comply with city electrical ordinances not included in this Contract. Indemnify and save harmless the Owner and its representatives against any claim arising from violation by the Contractor of any law, ordinance, or regulation.

This Contract is between the Owner and the Contractor only. No person or entity may claim third-party beneficiary status under this Contract or any of its provisions, nor may any non-party sue for personal injuries or property damage under this Contract.

4. PERMITS, LICENSES, AND TAXES

Procure all permits and licenses; pay all charges, fees, and taxes; and give all notices necessary and incidental to the due and lawful prosecution of work, except for permits provided by the Owner and as specified in Article 7L.7., "Preservation of Cultural and Natural Resources and the Environment."

5. PATENTED DEVICES, MATERIAL, AND PROCESSES

Indemnify and save harmless the Owner from any claims for infringement from the Contractor's use of any patented design, device, material, process, trademark, or copyright selected by the Contractor and used in connection with the work. Indemnify and save harmless the Owner against any costs, expenses, or damages that it may be obliged to pay, by reason of this infringement, at any time during the prosecution or after the completion of the work.

6. PERSONAL LIABILITY OF PUBLIC OFFICIALS

Owner employees are agents and representatives of the Owner and will incur no liability, personal or otherwise, in carrying out the provisions of the Contract or in exercising any power or authority granted under the Contract.

7. PRESERVATION OF CULTURAL AND NATURAL RESOURCES AND THE ENVIRONMENT

Project-specific information pertinent to cultural and natural resources is included in the plan set in the General Notes and on the Environmental Permits, Issues, and Commitments (EPIC) sheet. Adhere to all guidance, Best Management Practices (BMPs), and permits shown on the plans. Signing the Contract certifies compliance with all applicable laws, rules, and regulations pertaining to the preservation of cultural resources, natural resources, and the environment as issued by the following or other agencies.

- OSHA
- TCEQ
- Texas Department of Transportation
- Texas Historical Commission
- Texas Parks and Wildlife Department
- Texas Railroad Commission
- U.S. Army Corps of Engineers (USACE)
- U.S. Department of Energy
- U.S. Department of Transportation
- EPA
- Federal Emergency Management Agency
- U.S. Fish and Wildlife Service

All subcontractors must also comply with applicable environmental laws, rules, regulations, and requirements in the Contract.

7.1. **Cultural Resources**. Cease all work immediately if a site, building, or location of historical, archeological, educational, or scientific interest is discovered within the right of way. The site, building, or location will be investigated and evaluated by the Owner.

7.2. **Protected and Imperiled Species and Wildlife**. Cease all work immediately and within 50 ft. if a protected or imperiled species, or any species assumed to be protected or imperiled, or wildlife is encountered onsite. Allow any animals to leave the area. Do not kill any wildlife. Contact Owner's environmental staff to investigate and evaluate any species or wildlife issues.

7.3. **Migratory Birds**. Bird and nest removal must not occur during vegetation clearing, construction, or maintenance activities on structures where birds or nests are present during the nesting season, as shown on the plans. If work will occur during the nesting season, measures to prevent nest establishment must be used before the start of nesting season or any activity. Contact Owner's environmental staff for assistance with birds and nests.

7.4. **Texas Pollutant Discharge Elimination System (TPDES) Permits and Stormwater Pollution Prevention Plans (SWP3s).**

7.4.1. Projects with Less than 1 Acre of Soil Disturbance Including Required Associated Project Specific Locations (PSLs) in Accordance with TPDES Construction General Permit (CGP) No. TXR150000. No construction site notice (CSN) posting will be required for soil disturbances within the right of way. Adhere to the requirements of the SWP3 and environmental layout as shown on the plans.

7.4.2. Projects with 1 Acre but Less than 5 Acres of Soil Disturbance Including Required Associated PSLs in Accordance with TPDES CGP No. TXR150000. The Owner and the Contractor will operate under a shared SWP3 for portions of the project in the right of way.

The Owner will be considered the primary operator with operational control over plans and specifications as defined in TPDES CGP No. TXR150000 for construction activity in the right of way. The Owner will post a small CSN and follow other requirements as defined in TPDES CGP No. TXR150000 as the entity having operational control over plans and specifications for work shown on the plans in the right of way.

The Contractor will be considered the primary operator with day-to-day operational control as defined in TPDES CGP No. TXR150000 for construction activity in the right of way. In addition to the Owner's actions, the Contractor will post a small CSN and follow other requirements as defined in TPDES CGP No. TXR150000 as the entity having day-to-day operational control of the work shown on the plans in the right of way. This is in addition to the Contractor being responsible for TPDES CGP No. TXR150000 requirements for on-right-of-way and off-right-of-way PSLs. The Contractor will adhere to all requirements of the SWP3 and environmental layout as shown on the plans. The Contractor will be responsible for implementing the SWP3 for the project site as shown on the plans, in conformance with specifications, in accordance with TPDES CGP No. TXR150000, and as directed. Notification to Municipal Separate Storm Sewer System (MS4) operators (when applicable) upon project initiation and completion must be provided in accordance with TPDES CGP No. TXR150000 requirements. A signed copy of the small CSN will be provided to MS4 operators (where applicable) at least 2 days before commencing construction.

With the Engineer's concurrence upon the completion of soil disturbing activities and achieving permanent stabilization of 70% native background vegetation cover, the CSN may be removed.

7.4.3. **Projects with 5 Acres or More of Soil Disturbance Including Required Associated PSLs in Accordance with TPDES CGP No. TXR150000**. The Owner and the Contractor will operate under a shared SWP3 for portions of the project in the right of way. The Owner will be considered the primary operator with operational control over plans and specifications as defined in TPDES CGP No. TXR150000 for construction activities in the right of way. The Owner will post a large CSN and file a Notice of Intent (NOI); Notice of Change (NOC), if applicable; and Notice of Termination (NOT), along with other requirements in accordance with TPDES CGP No. TXR150000, as the entity having operational control over plans and specifications for work shown on the plans in the right of way.

The Contractor will be considered the primary operator for day-to-day operational control as defined in TPDES CGP No. TXR150000 for construction activities in the right of way. In addition to the Owner's actions, the Contractor will file an NOI; NOC, if applicable; and NOT and post a large CSN along with other requirements as the entity having day-to-day operational control of the work shown on the plans in the right of way. This is in addition to the Contractor being responsible for TPDES CGP No. TXR150000 requirements for on-right-of-way and off-right-of way PSLs. Adhere to all requirements of the SWP3 and environmental layout as shown on the plans.

7.4.3.1. **Notice of Intent (NOI)**. Contractor will submit an NOI to TCEQ in accordance with TPDES CGP No. TXR150000 requirements. NOI must be submitted at least 7 days before commencement of construction activities at the project site. Contractor must file NOI under the same Regulated Entity Number (RN) as the Owner. Provide a signed copy to the Engineer and any other MS4 operators (where applicable) at the time of submittal. The Owner will submit their NOI before Contractor submission and will provide a copy for Contractor's use in completing the Contractor's NOI form.

7.4.3.2. **Notice of Change (NOC)**. Upon concurrence of the Engineer, submit an NOC to TCEQ within 14 days of discovery of a change or revision to the NOI as required by the CGP. Provide a signed copy of the NOC to the Engineer and any other MS4 operators (where applicable) at the time of submittal.

7.4.3.3. **Notice of Termination (NOT)**. Upon concurrence of the Engineer, submit an NOT to TCEQ within 30 days of the Engineer's approval that 70% native background vegetative cover is met or equivalent permanent stabilization has been employed in accordance with TPDES CGP No. TXR150000. Provide a signed copy of the NOT to the Engineer and any other MS4 operators (where applicable) at the time of submittal.

7.4.4. **Training**. Not applicable to Locally Let Projects.

7.5. **Work in Waters of the United States**. For work in the right of way, the Owner will obtain any required Section 404 permits from U.S. Army Corps of Engineers USACE before work begins. Adhere to all agreements, mitigation plans, and standard BMPs required by the permit. When Contractor-initiated changes in the construction method change the impacts on Waters of the United States, obtain new or revised Section 404 permits.

7.6. **Work in Navigable Waters of the United States**. For work in the right of way, the Owner will obtain any required Section 9 permits from the U.S. Coast Guard before work begins. Adhere to the stipulations of the permits and associated BMPs. When Contractor-initiated changes in the construction method change the impacts on Navigable Waters of the United States, obtain new or revised Section 9 permits.

7.7. **Work over Recharge or Contributing Zone of Protected Aquifers**. Make every reasonable effort to minimize the degradation of water quality resulting from impacts relating to work over the recharge or contributing zones of protected aquifers, as defined and delineated by TCEQ. Use BMPs and perform work in accordance with the Contract requirements.

7.8. **Project Specific Locations**. For all PSLs on or off the right of way (e.g., material sources, waste sites, parking areas, storage areas, field offices, staging areas, and haul roads), comply with all applicable laws, rules, and regulations pertaining to the preservation of cultural resources, natural resources, and the environment in accordance with Section 7L 7.1., "Cultural Resources." All subcontractors must also comply with applicable environmental laws, rules, regulations, and requirements in the Contract. Maintain documentation of environmental compliance activities, including environmental consultant reports and correspondence with the resource agencies. Provide documentation upon request. Obtain written approval from the Engineer for all PSLs in the right of way not specifically addressed on the plans. Prepare an SWP3 for all Contractor facilities, such as asphalt or concrete plants located within right of way. Comply with all TCEQ permit requirements for portable facilities, such as concrete batch plants, rock crushers, and asphalt plants. Ensure compliance with all environmental issues, such as Section 404 permits, wetland delineation, endangered species consultation requirements, or archeological and historic site impacts. Obtain all permits and clearances in advance.

7.9. **Contractor Responsibility**. If the Contractor initiates changes to the Contract and the Owner approves the changes, the Contractor is responsible for obtaining clearances and coordinating with the appropriate regulatory agencies.

8. AGRICULTURAL IRRIGATION

Regulate the sequence of work and make provisions as necessary to provide for agricultural irrigation or drainage during the work. Meet with the service provider or landowner to determine the proper time and sequence when irrigation demands will permit shutting off water flows to perform work.

Unless otherwise shown on the plans, the work performed in accordance with this Article will not be measured or paid for directly, but will be subsidiary to pertinent Items.

9. SANITARY PROVISIONS

Provide and maintain adequate, neat, and sanitary toilet accommodations for employees, including State employees, in compliance with the requirements and regulations of the Texas Department of State Health Services or other authorities having jurisdiction.

10. ABATEMENT AND MITIGATION OF EXCESSIVE OR UNNECESSARY NOISE

Minimize noise throughout all phases of the Contract. Exercise particular and special efforts to avoid the creation of unnecessary noise impact on adjacent noise-sensitive receptors in the placement of non-mobile equipment, such as air compressors, generators, and pumps. Place mobile and stationary equipment to cause the least disruption to normal adjacent activities.

All equipment associated with the work must be equipped with components to suppress excessive noise, and these components must be maintained in their original operating condition considering normal depreciation. Noise attenuation devices installed by the manufacturer, such as mufflers, engine covers, and insulation, must not be removed or rendered ineffectual, or be permitted to remain off the equipment while the equipment is in use.

11. USING EXPLOSIVES

Do not endanger life or property. When required by the plans or requested, provide a written blasting plan. The Owner retains the right to reject the blasting plan. Store all explosives securely, and clearly mark all storage places with “DANGER—EXPLOSIVES.” Store, handle, and use explosives and highly flammable material in compliance with federal, state, and local laws, ordinances, and regulations. Assume liability for property damage, injury, or death resulting from the use of explosives.

Give at least 48-hr. advance notice to the appropriate railroad representative before doing any blasting work involving the use of electric blasting caps within 200 ft. of any railroad track.

12. RESPONSIBILITY FOR HAZARDOUS MATERIALS

Comply with the requirements of Article 6L.10., “Hazardous Materials.” Indemnify and save harmless the Owner and its agents and employees from all suits, actions, or claims and from all liability and damages for any injury or damage to any person or property arising from the generation or disposition of hazardous materials introduced by the Contractor on any work done by the Contractor on Owner-owned or controlled sites. Indemnify and save harmless the Owner and its representatives from any liability or responsibility arising out of the Contractor’s generation or disposition of any hazardous materials obtained, processed, stored, or shipped, on sites not owned or controlled by the Owner. Reimburse the Owner for all payments, fees, or restitution the Owner is required to make as a result of the Contractor’s actions.

13. RESTORING SURFACES OPENED BY PERMISSION

Do not authorize anyone to make an opening in the highway for utilities, drainage, or any other reason without written permission from the Engineer. Repair all openings as directed. Payment for repair of surfaces opened by permission will be made in conformance with pertinent Items or in accordance with Article 4L.4., “Changes in the Work.” Costs associated with openings made with Contractor authorization but without Owner approval will not be paid.

14. PROTECTING ADJACENT PROPERTY

Protect adjacent property from damage. If any damage results from an act or omission on the part of or on behalf of the Contractor, take corrective action to restore the damaged property to a condition similar or equal to that existing before the damage was done.

15. RESPONSIBILITY FOR DAMAGE CLAIMS

Indemnify and save harmless the Owner and its agents and employees from all suits, actions, or claims and from all liability and damages for any injury or damage to any person or property due to the Contractor's negligence in the performance of the work and from any claims arising or amounts recovered under any laws, including workers' compensation and the Texas Tort Claims Act. Indemnify and save harmless the Owner and assume responsibility for all damages and injury to property of any character occurring during the prosecution of the work resulting from any act, omission, neglect, or misconduct on the Contractor's part in the manner or method of executing the work; from failure to properly execute the work; or from defective work or material.

Pipelines and other underground installations that may or may not be shown on the plans may be located within the right of way. Indemnify and save harmless the Owner from any suits or claims resulting from damage by the Contractor's operations to any pipeline or underground installation. Make available the scheduled sequence of work to the respective utility owners so that they may coordinate and schedule adjustments of their utilities that conflict with the proposed work.

16. HAULING AND LOADS ON ROADWAYS AND STRUCTURES

Comply with federal and state laws concerning legal gross and axle weights. Except for the designated Interstate system, vehicles with a valid yearly overweight tolerance permit may haul materials to the work locations at the permitted load. Provide copies of the yearly overweight tolerance permits to the Engineer upon request. Construction equipment is not exempt from oversize or overweight permitting requirements on roadways open to the traveling public.

Protect existing bridges and other structures that will remain in use by the traveling public during and after the completion of the Contract. Construction traffic on roadways, bridges, and culverts within the limits of the work, including any structures under construction that will remain in service during and after completion of the Contract, is subject to legal size and weight limitations.

Additional temporary fill may be required by the Engineer for hauling purposes for the protection of certain structures. This additional fill will not be paid for directly, but will be subsidiary to pertinent Items.

Replace or restore to original condition any structure damaged by the Contractor's operations.

The Engineer may allow equipment with oversize or non-divisible overweight loads to operate without a permit within the work locations on pavement structures not open to the traveling public. Submit Contractor-proposed changes to traffic control plans for approval, in accordance with Item 502. The following Sections further address overweight allowances. The Owner will make available to the Contractor any available plans and material reports for existing structures.

16.1. **Overweight Construction Traffic Crossing Structures**. The Engineer may allow crossing of a structure not open to the public within the work locations when divisible or non-divisible loads exceed legal weight limitations, including limits for load-posted bridges. Obtain written permission to make these crossings. Submit for approval a structural analysis by a licensed professional engineer indicating that the excessive loads should be allowed. Provide a manufacturer's certificate of equipment weight that includes the weight distribution on the various axles and any additional parts, such as counterweights, the configuration of the axles, or other information necessary for the analysis. Submit the structural analysis and supporting documentation sufficiently in advance of the move to allow for review by the Engineer. Permission may be granted if the Engineer finds that no damage or overstresses exceeding those normally allowed for occasional overweight loads will result to structures that will remain in use after Contract completion. Provide temporary matting or other protective measures as directed.

Schedule loads so that only one vehicle is on any span or continuous unit at any time. Use barricades, fences, or other positive methods to prevent other vehicular access to structures at any time the overweight load is on any span or continuous unit.

16.2. **Construction Equipment Operating on Structures**. Cranes and other construction equipment used to perform construction operations that exceed legal weight limits may be allowed on structures. Before any operation that may require placement of equipment on a structure, submit for approval a detailed structural analysis prepared by a licensed professional engineer.

Submit the structural analysis and supporting documentation sufficiently in advance of the use to allow for review by the Engineer. Include all axle loads and configurations, spacing of tracks or wheels, tire loads, outrigger placements, center of gravity, equipment weight, and predicted loads on tires and outriggers for all planned movements, swings, or boom reaches. The analysis must demonstrate that no overstresses exceeding those normally allowed for occasional overweight loads will occur.

16.3. **Loads on Structures**. Do not store or stockpile material on bridge structures without written permission. If required, submit a structural analysis and supporting documentation by a licensed professional engineer for review by the Engineer. Permission may be granted if the Engineer finds that no damage or overstresses exceeding those normally allowed for occasional overweight loads will result to structures that will remain in use after Contract completion. Provide temporary matting or other protective measures as directed.

16.4. **Hauling Divisible Overweight Loads on Pavement Within Work Locations**. The Engineer may allow divisible overweight loads on pavement structures within the work locations not open to the traveling public. Obtain written approval before hauling the overweight loads. Include calculations to demonstrate that there will be no damage or overstress to the pavement structure.

17. CONTRACTOR'S RESPONSIBILITY FOR WORK

Until final acceptance of the Contract, take every precaution against injury or damage to any part of the work by the action of the elements or by any other cause, whether arising from the execution or from the non-execution of the work. Protect all materials to be used in the work at all times, including periods of suspension.

When any roadway or portion of the roadway is in suitable condition for travel, it may be opened to traffic as directed. Opening of the roadway to traffic does not constitute final acceptance.

Repair damage to all work until final acceptance. Repair damage to existing facilities in accordance with the Contract or as directed by the Engineer. Repair damage to existing facilities or work caused by Contractor operations at the Contractor's expense. Repair work for damage that was not due to the Contractor's operations will not be paid for except as provided below.

17.1. **Reimbursable Repair**. Except for damage to appurtenances listed in Section 7L.17.2.1., "Unreimbursed Repair," the Contractor will be reimbursed for repair of damage caused by:

- motor vehicle, watercraft, aircraft, or railroad-train incident;
- vandalism; or
- Acts of God, such as earthquake, tidal wave, tornado, hurricane, or other cataclysmic phenomena of nature.

17.2. **Appurtenances**.

17.2.1. **Unreimbursed Repair**. Except for destruction (not reusable) due to Acts of God, reimbursement will not be made for repair of damage to the following temporary appurtenances, regardless of cause:

- signs,
- barricades, and
- other work zone traffic control devices.

Crash cushion attenuators and guardrail end treatments are reimbursed in accordance with Section 7L.17.2.2., "Reimbursed Repair." Truck-mounted attenuators, trailer attenuators, and portable changeable message signs are eligible for reimbursed repair in accordance with Section 7L.17.2.2.,

"Reimbursed Repair." Reimbursement will only be made when the Engineer directs the placement of the device in a location other than what is depicted in the Contract and the Contractor is unable to seek reimbursement from third-party insurance.

Where the Contractor retains replaced appurtenances after completion of the project, the Owner will limit the reimbursement to the cost that is above the salvage value at the end of the project.

17.2.2. **Reimbursed Repair**. Reimbursement will be made for repair of damage due to the causes listed in Section 7L.17.1, "Reimbursable Repair."

17.3. **Roadways and Structures**. Until final acceptance, the Contractor is responsible for all work constructed under the Contract. The Owner will not reimburse the Contractor for repair work to new construction, unless the failure or damage is due to one of the causes listed in Section 7L.17.1., "Reimbursable Repair."

The Owner will be responsible for the cost for repair of damage to existing roadways and structures not caused by the Contractor's operations.

17.4. **Detours**. The Contractor will be responsible for the cost of maintenance of detours constructed under the Contract, unless the failure or damage is due to one of the causes listed in Section 7L.17.1., "Reimbursable Repair." In addition, the Engineer will reimburse the Contractor for repairs to detours when failures occur for reasons beyond the Contractor's control. Reimbursement will be made for repairs to detours constructed unless the failure was due to materials and workmanship. The Owner will be responsible for the cost of maintenance of existing streets and roadways used for detours or handling traffic.

17.5. **Relief from Maintenance**. The Engineer may relieve the Contractor from responsibility of maintenance in accordance with this Section. This relief does not release the Contractor from responsibility for defective materials or work or constitute final acceptance. The Engineer will direct the Contractor to remove advance warning signs upon issuance of relief from maintenance.

17.5.1. **Isolated Work Locations**. For isolated work locations, when all work is completed, including work in accordance with Article 5L.11., "Final Cleanup," the Engineer may relieve the Contractor from responsibility for maintenance.

17.5.2. **Work Except for Vegetative Establishment and Test Periods**. When all work for all or isolated work locations has been completed, including work in accordance with Article 5L.11., "Final Cleanup," with the exception of vegetative establishment and maintenance periods and test and performance periods, the Engineer may relieve the Contractor from responsibility for maintenance of completed portions of work.

17.5.3. **Work Suspension**. When all work is suspended for an extended period of time, the Engineer may relieve the Contractor from responsibility for maintenance of completed portions of work during the period of suspension.

17.5.4. **When Directed by the Engineer**. The Engineer may relieve the Contractor from the responsibility for maintenance when directed.

17.6. **Basis of Payment**. When reimbursement for repair work is allowed and performed, payment will be made in conformance with pertinent Items or in accordance with Article 4L.4., "Changes in the Work."

18. ELECTRICAL REQUIREMENTS

18.1. **Definitions**.

18.1.1. **Electrical Work**. Electrical work is work performed for:

- Item 610, "Roadway Illumination Assemblies,"
- Item 614, "High Mast Illumination Assemblies,"
- Item 616, "Performance Testing of Lighting Systems,"

- Item 617, “Temporary Roadway Illumination,”
- Item 618, “Conduit,”
- Item 620, “Electrical Conductors,”
- Item 621, “Tray Cable,”
- Item 622, “Duct Cable,”
- Item 628, “Electrical Services,”
- Item 680, “Highway Traffic Signals,”
- Item 681, “Temporary Traffic Signals,”
- Item 684, “Traffic Signal Cables,”
- Item 685, “Roadside Flashing Beacon Assemblies,”
- other Items that involve either the distribution of electrical power greater than 50 volts or the installation of conduit and duct banks,
- the installation of conduit and wiring associated with Item 624, “Ground Boxes” and Item 656, “Foundations for Traffic Control Devices,” and
- the installation of the conduit system for communication and fiber optic cable.

Electrical work does not include the installation of communications or fiber optic cable, or the connections for low-voltage and inherently power-limited circuits, such as electronic or communications equipment. Assembly and placement of poles, structures, cabinets, enclosures, manholes, or other hardware will not be considered electrical work if no wiring, wiring connection, or conduit work is done at the time of assembly and placement.

18.1.2. **Specialized Electrical Work**. Specialized electrical work is work that includes the electrical service and feeders, sub-feeders, branch circuits, controls, raceways, and enclosures for the following:

- pump stations,
- moveable bridges,
- ferry slips,
- motor control centers,
- facilities required in accordance with Item 504, “Field Office and Laboratory,”
- rest area or other public buildings,
- weigh-in-motion stations,
- electrical services larger than 200 amps,
- electrical services with main or branch circuit breaker sizes not shown in the Contract, and
- any three-phase electrical power.

18.1.3. **Certified Person**. A certified person is a person who has passed the test from TxDOT’s course TRF450, “TxDOT Roadway Illuminations and Electrical Installations,” or other courses as approved by the Traffic Safety Division. Submit a current and valid TRF certification upon request. Texas A&M Engineering Extension Service (TEEX) certifications for “TxDOT Electrical Systems” course will not be accepted.

18.1.4. **Licensed Electrician**. A licensed electrician is a person with a current and valid unrestricted master electrical license, or unrestricted journeyman electrical license, who is supervised or directed by an unrestricted master electrician. An unrestricted master electrician need not be on the work locations at all times while electrical work is being done, but the unrestricted master electrician must approve work performed by the unrestricted journeyman. Licensed electrician requirements by city ordinances do not apply to on State system work.

The unrestricted journeyman and unrestricted master electrician licenses must be issued by the Texas Department of Licensing and Regulation or by a city in Texas with a population of 50,000 or greater that issues licenses based on passing a written test and demonstrating experience.

The Engineer may accept other states' electrical licenses. Submit documentation of the requirements for obtaining that license. Acceptance of the license will be based on sufficient evidence that the license was issued based on:

- passing a test based on the NEC like that used by Texas licensing officials, and
- sufficient electrical experience commensurate with general standards for an unrestricted master and unrestricted journeyman electrician in the State of Texas.

18.2. **Work Requirements**. The qualifications required to perform electrical work and specialized electrical work are shown in Table 1.

Table 1
Work Requirements

Type of Work	Qualifications to Perform Work
Electrical work with plans	Licensed electrician, certified person, or workers directly supervised by a licensed electrician or certified person
Electrical work without plans	Licensed electrician or workers directly supervised by a licensed electrician
Specialized electrical work	Licensed electrician or workers directly supervised by a licensed electrician
Replace lamps, starting aids, and changing fixtures	Licensed electrician, certified person, or workers directly supervised by a licensed electrician or certified person
Conduit in precast section with approved working drawings	Inspection by licensed electrician or certified person
Conduit in cast-in-place section	Inspection by licensed electrician or certified person
All other electrical work (e.g., troubleshooting, repairs, and component replacement)	Licensed electrician or workers directly supervised by a licensed electrician

"Directly supervised by a licensed electrician" means that a licensed electrician is physically present during all electrical work. "Directly supervised by a licensed electrician or certified person" means that a licensed electrician or certified person is physically present during all electrical work.

A non-certified person may install conduit in cast-in-place concrete sections if the work is verified by a certified person before concrete placement.

When IMSA certification is specified on the plans, the requirements shown in Table 1 will still apply to the installation of the conduit, ground boxes, electrical services, pole grounding, and electrical conductors installed in accordance with Item 620.

19. PAYROLLS

Pay employees and contract labor no less than the predetermined wage rates shown in the Contract. Require that subcontractors pay no less than the predetermined wage rates shown in the Contract.

Payroll records must contain the information required by law. As an option, Form WH-347, "Payroll," is provided by the U.S. Department of Labor.

Maintain payroll and related records during the course of the Contract and preserve these records for 3 yr. following the completion of the Contract or as required by law.

19.1. **Minimum Wage Requirements for Federally Funded Contracts**. Comply with the requirements of FHWA-1273, "Required Contract Provisions Federal-Aid Construction Contracts."

For construction contracts, submit payroll records to the Engineer using the manner prescribed by the Owner.

19.2. **Minimum Wage Requirements for State-Funded Contracts**. Comply with the requirements of 29 USC § 206 unless otherwise shown in the Contract.

For construction contracts, submit payroll records to the Engineer in the manner prescribed.

20. SECURITY INCIDENTS – NOT APPLICABLE TO LOCALLY LET PROJECTS

Item 8L
Prosecution and Progress

1. PROSECUTION OF WORK

Begin work within 30 calendar days after the authorization date to begin work. Prosecute the work continuously to completion within the working days specified. Unless otherwise shown on the plans, work may be prosecuted in concurrent phases if no changes are required to the traffic control plan or if a revised traffic control plan is approved. Notify the Engineer at least 24 hr. before beginning work or before beginning any new operation. Do not start new operations to the detriment of work already begun. Minimize interference to traffic.

2. SUBCONTRACTING

Do not sublet any portion of a construction Contract without the Engineer's written approval. A subcontract does not relieve any responsibility under the Contract and bonds. Ensure that all subcontracted work complies with all governing labor provisions.

The Contractor certifies by signing the Contract that the Contractor will not enter into any subcontract with a subcontractor that is debarred or suspended by the Commission, Owner, or any federal agency.

For federally funded contracts, ensure the required federal documents are physically attached to each subcontract agreement, including all tiered subcontract agreements.

For all DBE subcontracts, including all tiered DBE subcontracts, submit a copy of the executed subcontract agreement.

Upon request, submit a copy of the executed non-DBE subcontracts, including all tiered non-DBE subcontracts.

2.1. **Construction Contracts and Federally Funded Maintenance Contracts**. Perform work with own organization on at least 30% of the total original Contract cost (25% if the Contractor is an SBE on a wholly State- or local-funded Contract), excluding any specialty items as determined by the Engineer. Specialty items are those that require highly specialized knowledge, abilities, or equipment not usually available in the contracting firm expected to bid on the proposed Contract as a whole.

Specialty items will be shown on the plans or as determined by the Engineer. Bid cost of specialty items performed by subcontractors will be deducted from the total original Contract cost before computing the required amount of work to be performed by the Contractor's own organization.

The term "perform work with own organization" includes only:

- workers employed and paid directly by the Contractor or wholly owned subsidiary;
- equipment owned by the Contractor or wholly owned subsidiary;
- rented or leased equipment operated by the Contractor's employees or wholly owned subsidiary's employees;
- materials incorporated into the work if the majority of the value of the work involved in incorporating the material is performed by the Contractor's own organization, including a wholly owned subsidiary's organization; and

- labor provided by staff leasing firms licensed under Chapter 91 of the Texas Labor Code for nonsupervisory personnel if the Contractor or wholly owned subsidiary maintains direct control over the activities of the leased employees and includes them in the weekly payrolls.

Mobilization is not included in calculation of 30%.

When staff leasing firms provide materials or equipment, they are considered subcontractors. In these instances, submit staff leasing firms for approval as a subcontractor.

Copies of canceled checks and certified statements may be required to verify compliance with the requirements of this Section.

2.2. **State-Funded Maintenance Contracts**. Not applicable to locally let projects.

2.3. **Payments to Subcontractors**. Report payments for DBE subcontracts, including tiered DBE subcontracts, in the manner as prescribed by the Owner by the 20th day of each month.

2.3.1. **Payment Records**. Make payment and related records, including but not limited to copies of canceled checks, available for inspection by the Owner. Retain payment records for a period of 3 yr. following the completion of the Contract.

2.4. **Payrolls**. Comply with Article 7L.19., "Payrolls."

3. COMPUTATION OF CONTRACT TIME FOR COMPLETION

The number of working days is established by the Contract. For Contracts with work orders, the number of working days is established in each work order. Working day charges will begin when work begins as prescribed in Article 8L.1., "Prosecution of Work." Working day charges will continue in accordance with the Contract.

The development of the conceptual time determination is intended to establish the number of working days on the Contract. Upon request, the Engineer will provide the conceptual time determination schedule to the Contractor for informational purposes only. The schedule assumes generic resources, production rates, sequences of construction and average weather conditions based on historic data. Schedule labor, equipment, procurement of materials, subcontractor work, and all other necessary means to prosecute the work within the number of working days specified by the Contract.

3.1. **Working Day Charges**. Working days will be charged in accordance with Section 8L.3.1.4., "Standard Workweek," unless otherwise shown on the plans. Working days will be computed and charged in accordance with one of the following:

3.1.1. **Five-Day Workweek**. Working days will be charged Monday–Friday, excluding national holidays, regardless of weather conditions or material availability. The Contractor has the option of working on Saturdays. Provide sufficient advance notice to the Engineer when scheduling work on Saturdays. Work on Sundays and national holidays will not be permitted without written permission of the Engineer. If work requiring an Inspector to be present or if critical path activities are performed on a Saturday, Sunday, or national holiday, and weather and other conditions permit the performance of work for 7 hr. between 7 A.M. and 6 P.M., a working day will be charged.

3.1.2. **Six-Day Workweek**. Working days will be charged Monday–Saturday, excluding national holidays, regardless of weather conditions or material availability. Work on Sundays and national holidays will not be permitted without written permission of the Engineer. If work requiring an Inspector to be present or if critical path activities are performed on a Sunday or a national holiday, and weather or other conditions permit the performance of work for 7 hr. between 7 A.M. and 6 P.M., a working day will be charged.

3.1.3. **Seven-Day Workweek**. Working days will be charged Monday–Sunday, excluding national holidays, regardless of weather conditions or material availability. Work on national holidays will not be permitted without written permission of the Engineer. If work or critical path activities requiring an Inspector to be present are performed on any of these holidays, and weather or other conditions permit the performance of work for 7 hr. between 7 A.M. and 6 P.M., a working day will be charged.

3.1.4. **Standard Workweek**. Working days will be charged Monday–Friday, excluding national or State holidays, if weather or other conditions permit the performance of the principal unit of work underway, as determined by the Engineer, for a continuous period of at least 7 hr. between 7:00 A.M. and 6:00 P.M., unless otherwise shown in the Contract. The Contractor has the option of working on Saturdays or State holidays. Provide sufficient advance notice to the Engineer when scheduling work on Saturdays. Work on Sundays and national holidays will not be permitted without written permission of the Engineer. If work requiring an Inspector to be present or critical path activities are performed on a Saturday, Sunday, or holiday, and weather or other conditions permit the performance of work for 7 hr. between 7 A.M. and 6 P.M., a working day will be charged.

3.1.5. **Calendar Day**. Working days will be charged Sunday–Saturday, including all holidays, regardless of weather conditions, material availability, or other conditions not under the control of the Contractor.

3.1.6. **Other**. Working days will be charged as shown on the plans.

A "Working Day" is defined as any day not including Saturdays, Sundays, or any legal holidays, observed by the City of Laredo, in which weather or other conditions, not under the control of the Contractor, will permit construction of the principal units of work for a continuous period of not less than seven (7) hours. If the contractor opts to work on Saturday, Sunday, or legal holiday requiring construction inspection, said days are considered working days and charged to the contract time, and the cost for such inspection borne by the contractor.

City's normal working hours are Monday through Friday, not including Saturdays, Sundays, or legal holidays observed by the City from 8:00 A.M. to 5:00 P.M. The contractor shall notify the City at least twenty-four (24) hours in advance for any work that is to be scheduled beyond the limits of the City's working hours, and the Contractor shall not begin any such work scheduled unless proper inspection and/or testing has been pre-arranged with the City, with the cost for such inspection beyond the City's working hours borne by the Contractor. However, should the City opt to expedite a project and chooses a calendar day contract for such endeavor, the City will bear the 8:00 A.M. to 5:00 P.M. inspection cost only, and the contractor pays for time beyond the city's working hours limit.

3.2. **Restricted Work Hours**. Restrictions on Contractor work hours and the related definition for working day charges are as prescribed in this Article unless otherwise shown on the plans.

3.3. **Nighttime Work**. Nighttime work is allowed only when shown on the plans or directed or allowed by the Engineer. Nighttime work is defined as work performed from 30 min. after sunset to 30 min. before sunrise.

3.3.1. **Five-, Six-, and Seven-Day Workweeks**. Nighttime work that extends past midnight will be assigned to the following day for the purposes of approval for allowing work on Sundays or national holidays.

3.3.2. **Standard Workweek**.

3.3.2.1. **Nighttime Work Only**. When nighttime work is allowed or required and daytime work is not allowed, working day charges will be made when weather and other conditions permit the performance of the principal unit of work underway, as determined by the Engineer, for a continuous period of at least 7 hr. for the nighttime period, as defined in Section 8L.3.3., "Nighttime Work," unless otherwise shown in the Contract.

3.3.2.2. **Nighttime Work and Daytime Work Requiring Inspector**. When nighttime work is performed or required and daytime work is allowed, working day charges will be made when weather and other conditions permit the performance of the principal unit of work underway, as determined by the Engineer, for a continuous period of at least 7 hr. for the nighttime period, as defined in Section 8L.3.3., "Nighttime Work," or for a

continuous period of at least 7 hr. for the alternative daytime period unless otherwise shown in the Contract. Only one day will be charged for each 24hr. period. When the Engineer agrees to restrict work hours to the nighttime period only, working day charges will be in accordance with Section 8L.3.3.2.1., "Nighttime Work Only."

3.4. **Time Statements**. The Engineer will furnish the Contractor a monthly time statement. Review the monthly time statement for correctness. Report protests in writing, no later than 30 calendar days after receipt of the time statement, providing a detailed explanation for each day protested. Not filing a protest within 30 calendar days will indicate acceptance of the working day charges, and future consideration of that statement will not be permitted.

4. TEMPORARY SUSPENSION OF WORK OR WORKING DAY CHARGES

The Engineer may suspend the work, wholly or in part, and will provide notice and reasons for the suspension in writing. Suspend and resume work only as directed in writing.

When part of the work is suspended, the Engineer may suspend working day charges only when conditions not under the control of the Contractor prohibit the performance of critical path activities. When all of the work is suspended for reasons not under the control of the Contractor, the Engineer will suspend working day charges.

5. PROJECT SCHEDULES

Prepare, maintain, and submit project schedules for the work to be performed under this Contract. Project schedules are used to convey the Contractor's intended work plan to the Owner.

The work performed under this Article will not be measured or paid for directly, but will be subsidiary to pertinent Items.

5.1. **Project Scheduler**. Designate an individual who will develop and maintain the progress schedule. The project scheduler will be prepared to discuss, in detail, the proposed sequence of work and methods of operation, and how that information will be communicated through the progress schedule at the preconstruction meeting. This individual will also attend the project meetings and make site visits to prepare, develop, and maintain the progress schedules.

5.2. **Progress Schedule**. Before starting work, prepare and submit a progress schedule based on the sequence of work and traffic control plan shown in the Contract. Prepare the progress schedule as a bar chart or critical path method (CPM) as shown on the plans. Include all planned work activities and sequences and show Contract completion within the number of working days specified. Incorporate major material procurements, known utility relocations, and other activities that may affect the completion of the Contract in the progress schedule. Show a beginning date, ending date, and duration in whole working days for each activity. Do not use activities exceeding 20 working days, unless agreed upon with the Engineer. Show an estimated production rate per working day for each work activity, unless otherwise agreed upon with the Engineer.

5.3. **Schedule Format**. Format all project schedules in accordance with the following.

- Begin the project schedule on the date of the start of Contract time or start of activities affecting work on the project.
- Show the sequence and interdependence of activities required for complete performance of the work. If using a CPM schedule, show a predecessor and a successor for each activity.
- Ensure all work sequences are logical and show a coordinated plan of the work.

CPM schedules must also:

- clearly and accurately identify the critical path as the longest continuous path;

- provide a legend for all abbreviations, run date, data date, project start date, and project completion date in the title block of each schedule submittal; and
- using calendars, incorporate seasonal weather conditions into the schedule for work (e.g., earthwork, concrete paving, structures, asphalt, and drainage) that may be influenced by temperature or precipitation. Also, incorporate non-work periods such as holidays, weekends, or other non-work days as identified in the Contract.

5.4. **Activity Format**. For each activity on the project schedule, provide:

- a concise description of the work represented by the activity,
- an activity duration in whole working days, and
- code activities so that organized plots of the schedule may be produced.

CPM schedules must also include the quantity of work and estimated production rate for major items of work. Provide enough information for review of the work being performed.

Total float is defined as the amount of time (in whole days) that an activity can be delayed before impacting the project's completion date. Total float is a shared commodity between the Owner and the Contractor.

5.5. **Schedule Types and Schedule Impacts**.

5.5.1. **Bar Chart**. Seven calendar days before the preconstruction meeting, prepare and submit a hard or electronic copy of the schedule using the bar chart method.

5.5.1.1. **Progress Schedule Reviews**. Update the project schedule and submit a hard or electronic copy when changes to the schedule occur or when requested.

5.5.2. **Critical Path Method**. Prepare and submit the schedule using the CPM. Submit an electronic copy to the Engineer within the timeframes specified. An electronic copy is defined as the scheduling software's native file, saved in a format acceptable to the Engineer. In all cases, an electronic format (.xer) of Primavera Project Planner and Enterprise Project Portfolio Management (P6) will be acceptable.

5.5.2.1. **Preliminary Schedule**. Unless otherwise agreed for a later submission, 7 calendar days before the preconstruction meeting, submit an electronic copy of the project schedule showing activities beginning with the authorization date to begin work and including activities to be performed within the first 90 calendar days from the work start date.

5.5.2.2. **Baseline Schedule**. The baseline schedule will be considered the Contractor's plan to successfully construct the project within the timeframe and construction sequencing indicated in the Contract. Submit electronic copies of the baseline schedule. When requested, submit two plots of the schedule: one organized with the activities logically grouped using the activity coding, and the other plot showing only the critical path determined by the longest path, not based on critical float.

Develop and submit the baseline schedule for review within the first 45 calendar days from the work start date unless the time for submission is extended by the Engineer.

5.5.2.2.1. **Review**. Within 15 calendar days of receipt of the schedule, the Engineer will evaluate and inform the Contractor if the schedule has been accepted. If the schedule is not accepted, the Engineer will provide comments to the Contractor for incorporation. Provide a revised schedule based on the Engineer's comments, or reasons for not doing so, within 10 calendar days. The Engineer's review and acceptance of the project schedule is for conformance to the requirements of the Contract documents only and does not relieve the Contractor of any responsibility for meeting the interim milestone dates (if specified) or the Contract completion date. Review and acceptance does not expressly or by implication warrant, acknowledge, or admit the reasonableness of the logic or durations of the project schedule. If the Contractor fails to define any element of work, activity, or logic and the Engineer's review does not detect this omission or error, the Contractor is responsible for correcting the error or omission.

Submit an acceptable baseline schedule before the 90th calendar day from the work start date unless the time for submission is extended by the Engineer.

5.5.2.3. **Progress Schedule**. Maintain and submit the progress schedule monthly for use by the Contractor and the Engineer. Submit an electronic copy as it will become an as-built record of the daily progress achieved on the project. If continuous progress of an activity is interrupted for any reason except non-work periods (e.g., holidays, weekend, or interference from temperature or precipitation), then the activity will show the actual finish date as that date of the start of the interruption and the activity will be broken into a subsequent activity (or activities, based on the number of interruptions) similarly numbered with successive alpha character as necessary. The original duration of the subsequent activity will be that of the remaining duration of the original activity. Relationships of the subsequent activity will match those of the original activity so that the integrity of the project schedule logic is maintained. Once established, the original durations and actual dates of all activities must remain unchanged. Revisions to the schedule may be made as necessary.

The project schedule must be revised when changes in construction phasing and sequencing occur or other changes that cause deviation from the original project schedule occur. Any revisions to the schedule must be listed in the monthly update narrative with the purpose of the revision and description of the impact on the project schedule's critical path and project completion date. Create the schedule revision using the latest update before the start of the revision.

Monthly updating of the project schedule will include updating of:

- the actual start dates for activities started,
- the actual finish dates for activities completed,
- the percentage of work completed and remaining duration for each activity started but not yet completed, and
- the calendars to show days actual work was performed on the various work activities.

The cutoff day for recording monthly progress will be the last day of each month. Submit the updated project schedule no later than the 20th calendar day of the following month. The Engineer will evaluate the updated schedule within 5 calendar days of receipt and inform the Contractor if it has or has not been accepted. If the schedule is not accepted, the Engineer will provide comments to the Contractor for incorporation. Provide a revised schedule based on the Engineer's comments, or reasons for not doing so, within 5 calendar days.

Provide a brief narrative in a bulleted statement format for major items that have impacted the schedule. Notify the Engineer if resource-leveling is being used.

5.5.2.3.1. **Project Schedule Summary Report (PSSR)**. When shown on the plans, provide the PSSR instead of the narrative required in Section 8L.5.5.2.3., "Progress Schedule." The PSSR includes a listing of major items that have impacted the schedule and a summary of progress in days ahead or behind schedule. Include an explanation of the project progress for the period represented on the form provided by the Owner.

5.5.3. **Notice of Potential Time Impact**. Submit a notice of potential time impact when a Contract time extension or adjustment of milestone dates may be justified or when directed.

Failure to provide this notice in the timeframes specified above will compromise the Owner's ability to mitigate the impacts, and the Contractor forfeits the right to request a time extension or adjustment of milestone dates unless the circumstances are such that the Contractor could not reasonably have had knowledge of the impact at the time.

5.5.4. **Time Impact Analysis**. When directed, provide a time impact analysis. A time impact analysis is an evaluation of the effects of impacts on the project. A time impact analysis consists of the following steps.

- **Step 1**. Establish the status of the project immediately before the impact.
- **Step 2**. Predict the effect of the impact on the schedule update used in Step 1.
- **Step 3**. Track the effects of the impact on the schedule during its occurrence.

- **Step 4**. Establish the status of the project after the impact's effect has ended and provide details identifying any mitigating actions or circumstances used to keep the project ongoing during the impact period.

Determine the time impact by comparing the status of the work before the impact (Step 1) to the prediction of the effect of the impact (Step 2), if requested, and to actual effects of the impact once it is complete (Step 4). Unless otherwise approved by the Engineer, Steps 1, 3, and 4 must be completed before consideration of a Contract time extension or adjustment of a milestone date will be provided. Time extensions will be considered only when delays that affect milestone dates or the Contract completion date are beyond the Contractor's control. Submit Step 4 no later than 15 calendar days after the impact's effects have ended or when all the information on the effect has been realized.

Submit one electronic backup copy of the complete time impact analysis and a copy of the full project schedule incorporating the time impact analysis. If the project schedule is revised after the submittal of a time impact analysis, but before its approval, indicate in writing the need for any modification to the time impact analysis.

The Engineer will review the time impact analysis upon completion of Step 4. If this review detects revisions or changes to the schedule that had not been performed and identified in a narrative, the Engineer may reject the time impact analysis. If the Engineer is in agreement with the time impact analysis, a change order may be issued to grant additional working days, or to adjust interim milestones. Once a change order has been executed, incorporate the time impact analysis into the project schedule. The time impact analysis may also be used to support the settlement of disputes and claims. Compensation related to the time impact analysis may be provided at the completion of the analysis or the completion of the project to determine the true role the impact played on the final completion.

6. FAILURE TO COMPLETE WORK ON TIME

The time established for the completion of the work is an essential element of the Contract. If the Contractor fails to complete the work within the number of working days specified, working days will continue to be charged. Failure to complete the Contract, callout work, or a work order within the number of working days specified, including any approved additional working days, will result in liquidated damages for each working day charged over the number of working days specified. The dollar amount specified in the Contract will be deducted from any money due or to become due the Contractor for each working day the Contract, callout work, or work order remains incomplete. This amount will be assessed not as a penalty but as liquidated damages. The amount assessed for non-site-specific Contracts will be based on the estimated amount for each work order unless otherwise shown in the Contract. The amount assessed for each callout will be as specified in the Contract.

7. DEFAULT OF CONTRACT

7.1. **Declaration of Default**. The Engineer may declare the Contractor to be in default of the Contract if the Contractor:

- fails to begin the work within the number of days specified;
- fails to prosecute the work to assure completion within the number of days specified;
- is uncooperative, disruptive, or threatening;
- fails to perform the work in accordance with the Contract requirements;
- neglects or refuses to remove and replace rejected materials or unacceptable work;
- discontinues the prosecution of the work without the Engineer's approval;
- makes an unauthorized assignment;
- fails to resume work that has been discontinued within a reasonable number of days after notice to do so;
- fails to conduct the work in an acceptable manner; or
- commits fraud or other unfixable conduct as determined by the Owner.

If any of these conditions occur, the Engineer will give notice in writing to the Contractor and the Surety of the intent to declare the Contractor in default. If the Contractor does not proceed as directed within 10 days after the notice, the Owner will provide written notice to the Contractor and the Surety to declare the Contractor to be in default of the Contract. If the Contractor provides the Owner written notice of voluntary default of the Contract, the Owner may waive the 10-day notice of intent to declare the Contractor in default and immediately provide written notice of default to the Contractor and the Surety. Calendar day charges will continue until completion of the Contract. The Owner may suspend work in accordance with Article 8L.4., "Temporary Suspension of Work or Working Day Charges," to investigate apparent fraud or other unfixable conduct before defaulting the Contractor. The Contractor may be subject to sanctions under the state and/or federal laws and regulations. A default may result in the application of remedial action by the Owner.

The Owner will determine the method used for the completion of the remaining work as follows.

- For Contracts without performance bonds, the Owner will determine the most expeditious and efficient way to complete the work and recover damages from the Contractor.
- For Contracts with performance bonds, the Owner will require the Contractor's Surety to complete the remaining work in accordance with the terms of the original Contract. A completing Contractor will be considered a subcontractor of the Surety. The Owner reserves the right to approve or reject proposed subcontractors. Work may resume after the Owner receives and approves Certificates of Insurance as required in Section 3.4.3., "Insurance." Certificates of Insurance may be issued in the name of the completing Contractor. The Surety is responsible for making every effort to expedite the resumption of work and completion of the Contract. The Owner may complete the work using any or all materials at the work locations that it deems suitable and acceptable. Any costs incurred by the Owner for the completion of the work under the Contract will be the responsibility of the Surety.

From the time of notification of the default until work resumes (either by the Surety or the Owner), the Owner will maintain traffic control devices and will do any other work it deems necessary, unless otherwise agreed upon by the Owner and the Surety. All costs associated with this work will be deducted from money due to the Surety.

The Owner will hold all money earned but not disbursed by the date of default. Upon resumption of the work after the default, all payments will be made to the Surety. All costs and charges incurred by the Owner resulting from the default, including the cost of completing the work under the Contract, costs of maintaining traffic control devices, costs for other work deemed necessary, and any applicable liquidated damages or disincentives will be deducted from money due the Contractor for completed work. If these costs exceed the sum that would have been payable under the Contract, the Surety will be liable and pay the Owner the balance of these costs in excess of the Contract price. In case the costs incurred by the Owner are less than the amount that would have been payable under the Contract if the work had been completed by the Contractor, the Owner will be entitled to retain the difference.

Comply with Article 8L.2., "Subcontracting," and abide by the DBE commitments previously approved by the Owner. Section 8L.2.1., "Construction Contracts and Federally Funded Maintenance Contracts," is waived.

No markups as defined in Article 9L.7., "Payment for Extra Work and Force Account Method," will be allowed for the Surety.

7.2. **Wrongful Default**. If it is determined after the Contractor is declared in default, that the Contractor was not in default, the rights and obligations of all parties will be the same as if termination had been issued for the convenience of the public as provided in Article 8L.8., "Termination of Contract."

8. TERMINATION OF CONTRACT

The Owner may terminate the Contract in whole or in part whenever:

- the Contractor is prevented from proceeding with the work as a direct result of an executive order of the President of the United States or the Governor of the State;

- the Contractor is prevented from proceeding with the work due to a national emergency, or when the work to be performed under the Contract is stopped, directly or indirectly, because of the freezing or diversion of materials, equipment, or labor as the result of an order or a proclamation of the President of the United States;
- the Contractor is prevented from proceeding with the work due to an order of any federal authority;
- the Contractor is prevented from proceeding with the work by reason of a preliminary, special, or permanent restraining court order where the issuance of the restraining order is primarily caused by acts or omissions of persons or agencies other than the Contractor; or
- the Owner determines that termination of the Contract is in the best interest of the State or the public. This includes, but is not limited to, the discovery of significant hazardous material problems, right of way acquisition problems, or utility conflicts that would cause substantial delays or expense to the Contract.

8.1. **Procedures and Submittals**. The Owner will provide written notice to the Contractor of termination specifying the extent of the termination and the effective date. Upon notice, immediately proceed in accordance with the following:

- stop work as specified in the notice,
- place no further subcontracts or orders for materials, services, or facilities, except as necessary to complete a critical portion of the Contract, as approved by the Engineer,
- terminate all subcontracts to the extent they relate to the work terminated,
- complete performance of the work not terminated,
- settle all outstanding liabilities and termination settlement proposals resulting from the termination of the Contract,
- create an inventory report, including all acceptable materials and products obtained for the Contract that have not been incorporated in the work that was terminated (include in the inventory report a description, quantity, location, source, cost, and payment status for each of the acceptable materials and products), and
- take any action necessary, or that the Engineer may direct, for the protection and preservation of the materials and products related to the Contract that are in the possession of the Contractor and in which the Owner has or may acquire an interest.

8.2. **Settlement Provisions**. Within 60 calendar days of the date of the notice of termination, submit a final termination settlement proposal, unless otherwise approved. The Engineer will prepare a change order that reduces the affected quantities of work and adds acceptable costs for termination. No claim for loss of anticipated profits will be considered. The Owner will pay reasonable and verifiable termination costs, including:

- all work completed at the unit bid price and partial payment for incomplete work,
- the percentage of Item 500, “Mobilization,” equivalent to the percentage of work complete or actual cost that can be supported by cost records, whichever is greater,
- expenses necessary for the preparation of termination settlement proposals and support data;
- the termination and settlement of subcontracts,
- storage, transportation, restocking, and other costs incurred necessary for the preservation, protection, or disposition of the termination inventory, and
- other expenses acceptable to the Owner.

Item 9L
Measurement and Payment

1. MEASUREMENT OF QUANTITIES

The Engineer will measure all completed work using United States standard measures, unless otherwise specified.

1.1. **Linear Measurement**. Unless otherwise specified, all longitudinal measurements for surface areas will be made along the actual surface of the roadway and not horizontally. No deduction will be made for structures in the roadway with an area of 9 sq. ft. or less. For all transverse measurements for areas of base courses, surface courses, and pavements, the dimensions to be used in calculating the pay areas will be the neat dimensions and will not exceed those shown on the plans, unless otherwise directed.

1.2. **Volume Measurement**. Transport materials measured for payment by volume in approved hauling vehicles. Display a unique identification mark on each vehicle. Furnish information necessary to calculate the volume capacity of each vehicle. The Engineer may require verification of volume through weight measurement. Use body shapes that allow the capacity to be verified. Load and level the load to the equipment's approved capacity. Loads not hauled in approved vehicles may be rejected.

1.3. **Weight Measurement**. Transport materials measured for payment by weight or truck measure in approved hauling vehicles. Furnish certified measurements, tare weights, and legal gross weight calculations for all haul units. Affix a permanent, legible number on the truck and on the trailer to correspond with the certified information. Furnish certified weights of loaded haul units transporting material if requested.

The material will be measured at the point of delivery. The cost of supplying these volume and weight capacities is subsidiary to the pertinent Item. For measurement by the ton, in the field, provide measurements in accordance with Item 520, "Weighing and Measuring Equipment," except for Items where ton measurements are measured by standard tables.

The Engineer may reject loads and suspend hauling operations for overloading.

1.3.1. **Hauling on Routes Accessible to the Traveling Public**. For payment purposes on haul routes accessible to the traveling public:

- If the gross vehicle weight is less than the maximum allowed by state law, including applicable yearly weight tolerance permit, the net weight of the load will be determined by deducting the tare weight of the vehicle from the gross weight.
- If the gross vehicle weight is more than the maximum allowed by state law, including applicable yearly weight tolerance permit, the net weight of the load will be determined by deducting the tare weight of the vehicle from the maximum gross weight allowed.

1.3.2. **Hauling on Routes Not Accessible to the Traveling Public**. For payment purposes on haul routes that are not accessible to the traveling public where advance permission is obtained in writing from the Engineer:

- If the gross vehicle weight is less than the maximum allowed by the Engineer, including applicable yearly weight tolerance permit, the net weight of the load will be determined by deducting the tare weight of the vehicle from the gross weight.
- If the gross vehicle weight is more than the maximum allowed by the Engineer, the net weight of the load will be determined by deducting the tare weight of the vehicle from the maximum gross weight allowed.

2. PLANS QUANTITY MEASUREMENT

Plans quantities may or may not represent the exact quantity of work performed or material moved, handled, or placed during the execution of the Contract. The estimated bid quantities are designated as final payment quantities, unless revised by the governing specifications or this Article.

If the quantity measured as outlined under “Measurement” varies by more than 5% (or as stipulated under “Measurement” for specific Items) from the total estimated quantity for an individual Item originally shown in the Contract, an adjustment may be made to the quantity of authorized work done for payment purposes.

When quantities are revised by a change in design approved by the Owner, by change order, or to correct an error on the plans, the plans quantity will be increased or decreased by the amount involved in the change, and the 5% variance will apply to the new plans quantity.

If the total Contract quantity multiplied by the unit bid price for an individual Item is less than $250 and the Item is not originally a plans quantity Item, then the Item may be paid as a plans quantity Item if the Engineer and Contractor agree in writing to fix the final quantity as a plans quantity.

For Contracts with callout work and work orders, plans quantity measurement requirements are not applicable.

3. ADJUSTMENT OF QUANTITIES

The party to the Contract requesting the adjustment will provide field measurements and calculations showing the revised quantity. When approved, this revised quantity will constitute the final quantity for which payment will be made. Payment for revised quantity will be made at the unit price bid for that Item, except as provided for in Article 4L.4., “Changes in the Work.”

4. SCOPE OF PAYMENT

Payment of the Contract unit price is full compensation for all materials, equipment, labor, tools, and supplies necessary to complete the Item of work under the Contract. Until final acceptance in accordance with Article 5L.12., “Final Acceptance,” assume liability for completing the work according to the plans and specifications and any loss or damage arising from the performance of the work or from the action of the elements, infringement of patent, trademark, or copyright, except as provided elsewhere in the Contract.

The Owner will only pay for material incorporated into the work in accordance with the Contract. Payment of progress estimates will in no way affect the Contractor’s obligation under the Contract to repair or replace any defective parts in the construction or to replace any defective materials used in the construction and to be responsible for all damages due to defects if the defects and damages are discovered on or before final inspection and acceptance of the work.

5. PROGRESS PAYMENTS

The Engineer will prepare a monthly estimate “APPLICATION FOR PAYMENT” of the amount of work performed, including materials in place. Incomplete items of work may be paid at an agreed upon percentage approved by the Engineer. Payment of the monthly estimate is determined at the Contract item prices less any withholdings or deductions in accordance with the Contract. Progress payments may be withheld for failure to comply with the Contract.

It is the Owner’s intent to pay a Contractor for work through the last working day of the month; however, the use of early cut-off dates for monthly estimates and MOH is a project management practice to manage workload at the local level. Approval for using early cut-off dates is at the Owner’s discretion. The earliest cut-off date for pay applications is the 25th of the month.

6. PAYMENT FOR MATERIAL ON HAND (MOH)

If payment for MOH is desired, request compensation for the invoice cost of acceptable nonperishable materials that have not been used in the work before the request, and that have been delivered to the work location or are in acceptable storage places. Nonperishable materials are those that do not have a shelf life or whose characteristics do not materially change when exposed to the elements. Include only materials that have been sampled, tested, approved, or certified, and are ready for incorporation into the work. Only materials that are completely constructed or fabricated on the Contractor's order for a specific Contract and are so marked and on which an approved test report has been issued are eligible. Payment for MOH may include the following types of items: concrete traffic barrier, precast concrete box culverts, concrete piling, reinforced concrete pipe, and illumination poles. Any repairs required after fabricated materials have been approved for storage will require the Engineer's approval before being made and will be made at the Contractor's expense. Include only those materials and products, when cumulated under an individual item or similar bid items, that have an invoice cost of at least $1,000 in the request for MOH payment. (E.g., for MOH eligibility, various sizes of conductor are considered similar bid items and may be cumulated to meet the threshold; for small roadside signs, the sign supports, mounting bolts, and the sign face are considered one bid item or similar bid items for more than one pay item for sign supports.) Requests for MOH are to be submitted at least 2 days before but not later than the estimate cut-off date unless otherwise agreed. If there is a need to request MOH after the established cut-off date, the Owner can make accommodation as the need arises. This needed accommodation is to be the exception, though, and not the rule.

For Contracts with callout work and work orders, payment for MOH will only be made for materials authorized for purchase by the work order or by written approval of the Engineer.

If the request is acceptable, the Engineer will include payment for MOH in a progress payment. Payment for MOH does not constitute acceptance of the materials. Payment will not exceed the actual cost of the material as established by invoice, or the total cost for the associated item less reasonable placement costs, whichever is less. Materials for which the Contractor does not have a paid invoice within 60 days will not be eligible for payment and will be removed from the estimate. Payment may be limited to a portion of the invoice cost or unit price if shown elsewhere in the Contract. Payment for precast products fabricated or constructed by the Contractor for which invoices or freight bills are not available may be made based on statements of actual cost.

Submit the request on forms provided by the Owner. These forms may be electronically reproduced, provided they are in the same format and contain all the required information and certifications. Continue to submit monthly MOH forms until the total value of MOH is $0.

By submitting a request for MOH payment, the Contractor expressly authorizes the Owner to audit MOH records and to perform process reviews of the record-keeping system. If the Owner determines noncompliance with any of the requirements of this provision, the Owner may exclude payment for any or all MOH for the duration of the Contract.

Maintain all records relating to MOH payment until final acceptance. Provide these records to the Engineer upon request.

7. PAYMENT FOR EXTRA WORK AND FORCE ACCOUNT METHOD

Payment for extra work directed, performed, and accepted will be made in accordance with Article 4L.4., "Changes in the Work." Payment for extra work may be established by agreed unit prices or by Force Account Method.

Agreed unit prices are unit prices that include markups and are comparable to recent bid prices for the same character of work. These unit prices may be established without additional breakdown justification.

When using Force Account Method, determine an estimated cost for the proposed work and establish labor and equipment rates and material costs. Maintain daily records of extra work and provide copies of these

records daily, signed by the Contractor's representative, for the Owner's verification. Request payment for the extra work no later than the 10th day of the month following the month in which the work was performed. Include copies of all applicable invoices. If the extra work to be performed has an estimated cost of less than $10,000, submit for approval and payment an invoice of actual cost for materials, equipment, labor, tools, and incidentals necessary to complete the extra work. When added work requires mobilization that is exclusive to the added work, mobilization may be added to the force account invoice for payment.

7.1. **Markups**. Payment for extra work may include markups as compensation for the use of small tools, overhead expense, and profit.

7.1.1. **Labor**. Compensation will be made for payroll rates for each hour that the labor and foremen or others approved by the Engineer are actually engaged in the work. In no case will the rate of wages be less than the minimum shown in the Contract for a particular category. An additional 25% of this sum will be paid as compensation for overhead, superintendence, profit, and small tools.

7.1.2. **Insurance and Taxes**. An additional 55% of the labor cost, excluding the 25% compensation provided in Section 9L.7.1.1., "Labor," will be paid as compensation for labor insurance and labor taxes including the cost of premiums on non-project-specific liability (excluding vehicular) insurance, workers compensation insurance, Social Security, unemployment insurance taxes, and fringe benefits.

7.1.3. **Materials**. Compensation will be made for materials associated with the work based on actual delivered invoice costs, less any discount. An additional 25% of this sum will be paid as compensation for overhead and profit.

7.1.4. **Equipment**. Payment will be made for the established equipment hourly rates for each hour that the equipment is involved in the work. An additional 15% of this sum will be paid as compensation for overhead and profit not included in the rates.

Transportation cost for mobilizing equipment will be included if the equipment is mobilized from an offsite location.

7.1.4.1. **Contractor-Owned Equipment**. For Contractor-owned machinery, trucks, power tools, or other equipment, use the FHWA rental rates found in Equipment Watch multiplied by the regional adjustment factor and the rate adjustment factor to establish hourly rates. Use the rates in effect for each section of Equipment Watch at the time of use.

If a rate has not been established for a particular piece of equipment in Equipment Watch, the Engineer will allow a reasonable hourly rate. This price will include operating costs.

Payment for equipment will be made for the actual hours used in the work. The Owner reserves the right to withhold payment for low production or lack of progress. Payment will not be made for time lost for equipment breakdowns, time spent to repair equipment, or time after equipment is no longer needed.

If equipment is used intermittently while dedicated solely to the work, payment will be made for the duration the equipment is assigned to the work but no more than 8 hr. will be paid during a 24-hr. day, nor more than 40 hr. per week, nor more than 176 hr. per month, except when time is computed using a 6-day or 7-day workweek. When using a 6-day workweek, no more than 8 hr. will be paid during a 24-hr. day, nor more than 48 hr. per week, nor more than 211 hr. per month. When using a 7-day workweek, no more than 8 hr. will be paid during a 24-hr. day, nor more than 56 hr. per week, nor more than 246 hr. per month.

7.1.4.2. **Equipment Not Owned by the Contractor**. For equipment rented from a third party not owned by the Contractor, payment will be made at the invoice daily rental rate for each day the equipment is needed for the work. The Owner reserves the right to limit the daily rate to comparable FHWA rental rates found in Equipment Watch multiplied by the regional adjustment factor and the rate adjustment factor. When the invoice specifies that the rental rate does not include fuel, lubricants, repairs, and servicing, the Equipment Watch hourly operating cost for each hour the equipment is operated will be added.

When the invoice specifies equipment operators as a component of the equipment rental, payment will be made at the invoice rate for each operator for each day the equipment is needed for the work.

7.1.4.3. **Standby Equipment Costs**. Payment for standby equipment will be made in accordance with Section 9L.7.1.4., "Equipment." The 15% markup will be paid when standby is associated with extra work but will not be paid when standby is associated with damages.

7.1.4.3.1. **Contractor-Owned Equipment**. For Contractor-owned equipment:

- Standby will be paid at 50% of the monthly Equipment Watch rate after the regional and age adjustment factors have been applied. Operating costs will not be allowed. Calculate the standby rate as follows.

  Standby rate = (FHWA hourly rate - operating costs) × 50%

- If an hourly rate is needed, divide the monthly Equipment Watch rate by 176.
- No more than 8 hr. of standby will be paid during a 24-hr. day period, nor more than 40 hr. per week.
- Standby costs will not be allowed during periods when the equipment would have otherwise been idle.

7.1.4.3.2. **Equipment Not Owned by the Contractor**. For equipment rented from a third party not owned by the Contractor:

- Standby will be paid at the invoice daily rental rate, excluding operating cost, which includes fuel, lubricants, repairs, and servicing. The Owner reserves the right to limit the daily standby rate to comparable FHWA rental rates found in Equipment Watch multiplied by the regional adjustment factor and the rate adjustment factor.
- Standby will be paid for equipment operators when included on the invoice and equipment operators are actually on standby.
- Standby costs will not be allowed during periods when the equipment would have otherwise been idle.

7.1.5. **Subcontracting**. An additional 5% of the actual invoice cost will be paid to the Contractor as compensation for administrative cost and profit.

7.1.6. **Law Enforcement Personnel**. An additional 5% of the actual invoice cost will be paid as compensation for administrative costs and profit.

7.1.7. **Railroad Flaggers**. An additional 5% of the actual invoice cost will be paid as compensation for administrative cost and profit.

7.1.8. **Bond Cost**. An additional 1% of the total compensation provided in Article 9.7., "Payment for Extra Work and Force Account Method," will be paid for the increase in bond.

8. RETAINAGE

The Owner will withhold retainage of 5% on the Contractor. The Contractor may withhold retainage on subcontractors in accordance with state and federal regulations.

9. PAYMENT PROVISIONS FOR SUBCONTRACTORS

For the purposes of this Article only, the term subcontractor includes suppliers, and the term work includes materials provided by suppliers at a location approved by the Engineer.

These requirements apply to all tiers of subcontractors. Incorporate the provisions of this Article into all subcontract or material purchase agreements.

Pay subcontractors for work performed within 10 days after receiving payment from the Owner.

Pay any retainage on a subcontractor's work within 10 days after satisfactory completion of all the subcontractor's work. Completed subcontractor work includes vegetative establishment, test, maintenance, performance, and other similar periods that are the responsibility of the subcontractor.

For the purpose of this Section, satisfactory completion is accomplished when:

- the subcontractor has fulfilled the Contract requirements of both the Owner and the subcontract for the subcontracted work, including the submittal of all information required by the Contract and the Owner, and
- the work done by the subcontractor has been inspected, approved, and paid by the Owner.

Provide a certification of prompt payment to certify that all subcontractors and suppliers were paid from the previous month's payments and retainage was released for those whose work is complete. Submit the certification in the manner prescribed by the Owner each month and the month following the month when final acceptance occurred.

The inspection and approval of a subcontractor's work does not eliminate the Contractor's responsibilities for the work as defined in Article 7L.17., "Contractor's Responsibility for Work."

10. FINAL PAYMENT

When the Contract has been completed, all work has been approved, final acceptance has been made in accordance with Article 5L.12., "Final Acceptance," and Contractor submittals have been received, the Engineer will prepare a final estimate for payment showing the total quantity of work completed and the money owed the Contractor. The final payment will reflect the entire sum due, less any sums previously paid.

REQUIRED CONTRACT PROVISIONS
FEDERAL-AID CONSTRUCTION CONTRACTS

I. General
II. Nondiscrimination
III. Non-segregated Facilities
IV. Davis-Bacon and Related Act Provisions
V. Contract Work Hours and Safety Standards Act Provisions
VI. Subletting or Assigning the Contract
VII. Safety: Accident Prevention
VIII. False Statements Concerning Highway Projects
IX. Implementation of Clean Air Act and Federal Water Pollution Control Act
X. Certification Regarding Debarment, Suspension, Ineligibility and Voluntary Exclusion
XI. Certification Regarding Use of Contract Funds for Lobbying
XII. Use of United States-Flag Vessels:

ATTACHMENTS

A. Employment and Materials Preference for Appalachian Development Highway System or Appalachian Local Access Road Contracts (included in Appalachian contracts only)

I. GENERAL

1. Form FHWA-1273 must be physically incorporated in each construction contract funded under title 23, United States Code, as required in 23 CFR 633.102(b) (excluding emergency contracts solely intended for debris removal). The contractor (or subcontractor) must insert this form in each subcontract and further require its inclusion in all lower tier subcontracts (excluding purchase orders, rental agreements and other agreements for supplies or services). 23 CFR 633.102(e).

The applicable requirements of Form FHWA-1273 are incorporated by reference for work done under any purchase order, rental agreement or agreement for other services. The prime contractor shall be responsible for compliance by any subcontractor, lower-tier subcontractor or service provider. 23 CFR 633.102(e).

Form FHWA-1273 must be included in all Federal-aid design-build contracts, in all subcontracts and in lower tier subcontracts (excluding subcontracts for design services, purchase orders, rental agreements and other agreements for supplies or services) in accordance with 23 CFR 633.102. The design-builder shall be responsible for compliance by any subcontractor, lower-tier subcontractor or service provider.

Contracting agencies may reference Form FHWA-1273 in solicitation-for-bids or request-for-proposals documents, however, the Form FHWA-1273 must be physically incorporated (not referenced) in all contracts, subcontracts and lower-tier subcontracts (excluding purchase orders, rental agreements and other agreements for supplies or services related to a construction contract). 23 CFR 633.102(b).

2. Subject to the applicability criteria noted in the following sections, these contract provisions shall apply to all work performed on the contract by the contractor's own organization and with the assistance of workers under the contractor's immediate superintendence and to all work performed on the contract by piecework, station work, or by subcontract. 23 CFR 633.102(d).

3. A breach of any of the stipulations contained in these Required Contract Provisions may be sufficient grounds for withholding of progress payments, withholding of final payment, termination of the contract, suspension / debarment or any other action determined to be appropriate by the contracting agency and FHWA.

4. Selection of Labor: During the performance of this contract, the contractor shall not use convict labor for any purpose within the limits of a construction project on a Federal-aid highway unless it is labor performed by convicts who are on parole, supervised release, or probation. 23 U.S.C. 114(b). The term Federal-aid highway does not include roadways functionally classified as local roads or rural minor collectors. 23 U.S.C. 101(a).

II. NONDISCRIMINATION (23 CFR 230.107(a); 23 CFR Part 230, Subpart A, Appendix A; EO 11246)

The provisions of this section related to 23 CFR Part 230, Subpart A, Appendix A are applicable to all Federal-aid construction contracts and to all related construction subcontracts of $10,000 or more. The provisions of 23 CFR Part 230 are not applicable to material supply, engineering, or architectural service contracts.

In addition, the contractor and all subcontractors must comply with the following policies: Executive Order 11246, 41 CFR Part 60, 29 CFR Parts 1625-1627, 23 U.S.C. 140, Section 504 of the Rehabilitation Act of 1973, as amended (29 U.S.C. 794), Title VI of the Civil Rights Act of 1964, as amended (42 U.S.C. 2000d et seq.), and related regulations including 49 CFR Parts 21, 26, and 27; and 23 CFR Parts 200, 230, and 633.

The contractor and all subcontractors must comply with: the requirements of the Equal Opportunity Clause in 41 CFR 60-1.4(b) and, for all construction contracts exceeding $10,000, the Standard Federal Equal Employment Opportunity Construction Contract Specifications in 41 CFR 60-4.3.

Note: The U.S. Department of Labor has exclusive authority to determine compliance with Executive Order 11246 and the policies of the Secretary of Labor including 41 CFR Part 60, and 29 CFR Parts 1625-1627. The contracting agency and the FHWA have the authority and the responsibility to ensure compliance with 23 U.S.C. 140, Section 504 of the Rehabilitation Act of 1973, as amended (29 U.S.C. 794), and Title VI of the Civil Rights Act of 1964, as amended (42 U.S.C. 2000d et seq.), and related regulations including 49 CFR Parts 21, 26, and 27; and 23 CFR Parts 200, 230, and 633.

The following provision is adopted from 23 CFR Part 230, Subpart A, Appendix A, with appropriate revisions to conform to the U.S. Department of Labor (US DOL) and FHWA requirements.

1. Equal Employment Opportunity: Equal Employment Opportunity (EEO) requirements not to discriminate and to take affirmative action to assure equal opportunity as set forth under laws, executive orders, rules, regulations (*see* 28 CFR Part 35, 29 CFR Part 1630, 29 CFR Parts 1625-1627, 41 CFR Part 60 and 49 CFR Part 27) and orders of the Secretary of Labor as modified by the provisions prescribed herein, and imposed pursuant to 23 U.S.C. 140, shall constitute the EEO and specific affirmative action standards for the contractor's project activities under this contract. The provisions of the Americans with Disabilities Act of 1990 (42 U.S.C. 12101 et seq.) set forth under 28 CFR Part 35 and 29 CFR Part 1630 are incorporated by reference in this contract. In the execution of this contract, the contractor agrees to comply with the following minimum specific requirement activities of EEO:

a. The contractor will work with the contracting agency and the Federal Government to ensure that it has made every good faith effort to provide equal opportunity with respect to all of its terms and conditions of employment and in their review of activities under the contract. 23 CFR 230.409 (g)(4) & (5).

b. The contractor will accept as its operating policy the following statement:

> "It is the policy of this Company to assure that applicants are employed, and that employees are treated during employment, without regard to their race, religion, sex, sexual orientation, gender identity, color, national origin, age or disability. Such action shall include: employment, upgrading, demotion, or transfer; recruitment or recruitment advertising; layoff or termination; rates of pay or other forms of compensation; and selection for training, including apprenticeship, pre-apprenticeship, and/or on-the-job training."

2. EEO Officer: The contractor will designate and make known to the contracting officers an EEO Officer who will have the responsibility for and must be capable of effectively administering and promoting an active EEO program and who must be assigned adequate authority and responsibility to do so.

3. Dissemination of Policy: All members of the contractor's staff who are authorized to hire, supervise, promote, and discharge employees, or who recommend such action or are substantially involved in such action, will be made fully cognizant of and will implement the contractor's EEO policy and contractual responsibilities to provide EEO in each grade and classification of employment. To ensure that the above agreement will be met, the following actions will be taken as a minimum:

a. Periodic meetings of supervisory and personnel office employees will be conducted before the start of work and then not less often than once every six months, at which time the contractor's EEO policy and its implementation will be reviewed and explained. The meetings will be conducted by the EEO Officer or other knowledgeable company official.

b. All new supervisory or personnel office employees will be given a thorough indoctrination by the EEO Officer, covering all major aspects of the contractor's EEO obligations within thirty days following their reporting for duty with the contractor.

c. All personnel who are engaged in direct recruitment for the project will be instructed by the EEO Officer in the contractor's procedures for locating and hiring minorities and women.

d. Notices and posters setting forth the contractor's EEO policy will be placed in areas readily accessible to employees, applicants for employment and potential employees.

e. The contractor's EEO policy and the procedures to implement such policy will be brought to the attention of employees by means of meetings, employee handbooks, or other appropriate means.

4. Recruitment: When advertising for employees, the contractor will include in all advertisements for employees the notation: "An Equal Opportunity Employer." All such advertisements will be placed in publications having a large circulation among minorities and women in the area from which the project work force would normally be derived.

a. The contractor will, unless precluded by a valid bargaining agreement, conduct systematic and direct recruitment through public and private employee referral sources likely to yield qualified minorities and women. To meet this requirement, the contractor will identify sources of potential minority group employees and establish with such identified sources procedures whereby minority and women applicants may be referred to the contractor for employment consideration.

b. In the event the contractor has a valid bargaining agreement providing for exclusive hiring hall referrals, the contractor is expected to observe the provisions of that agreement to the extent that the system meets the contractor's compliance with EEO contract provisions. Where implementation of such an agreement has the effect of discriminating against minorities or women, or obligates the contractor to do the same, such implementation violates Federal nondiscrimination provisions.

c. The contractor will encourage its present employees to refer minorities and women as applicants for employment. Information and procedures with regard to referring such applicants will be discussed with employees.

5. Personnel Actions: Wages, working conditions, and employee benefits shall be established and administered, and personnel actions of every type, including hiring, upgrading, promotion, transfer, demotion, layoff, and termination, shall be taken without regard to race, color, religion, sex, sexual orientation, gender identity, national origin, age or disability. The following procedures shall be followed:

a. The contractor will conduct periodic inspections of project sites to ensure that working conditions and employee facilities do not indicate discriminatory treatment of project site personnel.

b. The contractor will periodically evaluate the spread of wages paid within each classification to determine any evidence of discriminatory wage practices.

c. The contractor will periodically review selected personnel actions in depth to determine whether there is evidence of discrimination. Where evidence is found, the contractor will promptly take corrective action. If the review indicates that the discrimination may extend beyond the actions reviewed, such corrective action shall include all affected persons.

d. The contractor will promptly investigate all complaints of alleged discrimination made to the contractor in connection with its obligations under this contract, will attempt to resolve such complaints, and will take appropriate corrective action

within a reasonable time. If the investigation indicates that the discrimination may affect persons other than the complainant, such corrective action shall include such other persons. Upon completion of each investigation, the contractor will inform every complainant of all of their avenues of appeal.

6. Training and Promotion:

a. The contractor will assist in locating, qualifying, and increasing the skills of minorities and women who are applicants for employment or current employees. Such efforts should be aimed at developing full journey level status employees in the type of trade or job classification involved.

b. Consistent with the contractor's work force requirements and as permissible under Federal and State regulations, the contractor shall make full use of training programs (i.e., apprenticeship and on-the-job training programs for the geographical area of contract performance). In the event a special provision for training is provided under this contract, this subparagraph will be superseded as indicated in the special provision. The contracting agency may reserve training positions for persons who receive welfare assistance in accordance with 23 U.S.C. 140(a).

c. The contractor will advise employees and applicants for employment of available training programs and entrance requirements for each.

d. The contractor will periodically review the training and promotion potential of employees who are minorities and women and will encourage eligible employees to apply for such training and promotion.

7. Unions: If the contractor relies in whole or in part upon unions as a source of employees, the contractor will use good faith efforts to obtain the cooperation of such unions to increase opportunities for minorities and women. 23 CFR 230.409. Actions by the contractor, either directly or through a contractor's association acting as agent, will include the procedures set forth below:

a. The contractor will use good faith efforts to develop, in cooperation with the unions, joint training programs aimed toward qualifying more minorities and women for membership in the unions and increasing the skills of minorities and women so that they may qualify for higher paying employment.

b. The contractor will use good faith efforts to incorporate an EEO clause into each union agreement to the end that such union will be contractually bound to refer applicants without regard to their race, color, religion, sex, sexual orientation, gender identity, national origin, age, or disability.

c. The contractor is to obtain information as to the referral practices and policies of the labor union except that to the extent such information is within the exclusive possession of the labor union and such labor union refuses to furnish such information to the contractor, the contractor shall so certify to the contracting agency and shall set forth what efforts have been made to obtain such information.

d. In the event the union is unable to provide the contractor with a reasonable flow of referrals within the time limit set forth in the collective bargaining agreement, the contractor will, through independent recruitment efforts, fill the employment vacancies without regard to race, color, religion, sex, sexual orientation, gender identity, national origin, age, or disability; making full efforts to obtain qualified and/or qualifiable minorities and women. The failure of a union to provide sufficient referrals (even though it is obligated to provide exclusive referrals under the terms of a collective bargaining agreement) does not relieve the contractor from the requirements of this paragraph. In the event the union referral practice prevents the contractor from meeting the obligations pursuant to Executive Order 11246, as amended, and these special provisions, such contractor shall immediately notify the contracting agency.

8. Reasonable Accommodation for Applicants / Employees with Disabilities: The contractor must be familiar with the requirements for and comply with the Americans with Disabilities Act and all rules and regulations established thereunder. Employers must provide reasonable accommodation in all employment activities unless to do so would cause an undue hardship.

9. Selection of Subcontractors, Procurement of Materials and Leasing of Equipment: The contractor shall not discriminate on the grounds of race, color, religion, sex, sexual orientation, gender identity, national origin, age, or disability in the selection and retention of subcontractors, including procurement of materials and leases of equipment. The contractor shall take all necessary and reasonable steps to ensure nondiscrimination in the administration of this contract.

a. The contractor shall notify all potential subcontractors, suppliers, and lessors of their EEO obligations under this contract.

b. The contractor will use good faith efforts to ensure subcontractor compliance with their EEO obligations.

10. Assurances Required:

a. The requirements of 49 CFR Part 26 and the State DOT's FHWA-approved Disadvantaged Business Enterprise (DBE) program are incorporated by reference.

b. The contractor, subrecipient or subcontractor shall not discriminate on the basis of race, color, national origin, or sex in the performance of this contract. The contractor shall carry out applicable requirements of 49 CFR part 26 in the award and administration of DOT-assisted contracts. Failure by the contractor to carry out these requirements is a material breach of this contract, which may result in the termination of this contract or such other remedy as the recipient deems appropriate, which may include, but is not limited to:
(1) Withholding monthly progress payments;
(2) Assessing sanctions;
(3) Liquidated damages; and/or
(4) Disqualifying the contractor from future bidding as non-responsible.

c. The Title VI and nondiscrimination provisions of U.S. DOT Order 1050.2A at Appendixes A and E are incorporated by reference. 49 CFR Part 21.

11. Records and Reports: The contractor shall keep such records as necessary to document compliance with the EEO requirements. Such records shall be retained for a period of three years following the date of the final payment to the contractor for all contract work and shall be available at reasonable times and places for inspection by authorized representatives of the contracting agency and the FHWA.

a. The records kept by the contractor shall document the following:

(1) The number and work hours of minority and non-minority group members and women employed in each work classification on the project;

(2) The progress and efforts being made in cooperation with unions, when applicable, to increase employment opportunities for minorities and women; and

(3) The progress and efforts being made in locating, hiring, training, qualifying, and upgrading minorities and women.

b. The contractors and subcontractors will submit an annual report to the contracting agency each July for the duration of the project indicating the number of minority, women, and non-minority group employees currently engaged in each work classification required by the contract work. This information is to be reported on Form FHWA-1391. The staffing data should represent the project work force on board in all or any part of the last payroll period preceding the end of July. If on-the-job training is being required by special provision, the contractor will be required to collect and report training data. The employment data should reflect the work force on board during all or any part of the last payroll period preceding the end of July.

III. NONSEGREGATED FACILITIES

This provision is applicable to all Federal-aid construction contracts and to all related construction subcontracts of more than $10,000. 41 CFR 60-1.5.

As prescribed by 41 CFR 60-1.8, the contractor must ensure that facilities provided for employees are provided in such a manner that segregation on the basis of race, color, religion, sex, sexual orientation, gender identity, or national origin cannot result. The contractor may neither require such segregated use by written or oral policies nor tolerate such use by employee custom. The contractor's obligation extends further to ensure that its employees are not assigned to perform their services at any location under the contractor's control where the facilities are segregated. The term "facilities" includes waiting rooms, work areas, restaurants and other eating areas, time clocks, restrooms, washrooms, locker rooms and other storage or dressing areas, parking lots, drinking fountains, recreation or entertainment areas, transportation, and housing provided for employees. The contractor shall provide separate or single-user restrooms and necessary dressing or sleeping areas to assure privacy between sexes.

IV. DAVIS-BACON AND RELATED ACT PROVISIONS

This section is applicable to all Federal-aid construction projects exceeding $2,000 and to all related subcontracts and lower-tier subcontracts (regardless of subcontract size), in accordance with 29 CFR 5.5. The requirements apply to all projects located within the right-of-way of a roadway that is functionally classified as Federal-aid highway. 23 U.S.C. 113. This excludes roadways functionally classified as local roads or rural minor collectors, which are exempt. 23 U.S.C. 101. Where applicable law requires that projects be treated as a project on a Federal-aid highway, the provisions of this subpart will apply regardless of the location of the project. Examples include: Surface Transportation Block Grant Program projects funded under 23 U.S.C. 133 [excluding recreational trails projects], the Nationally Significant Freight and Highway Projects funded under 23 U.S.C. 117, and National Highway Freight Program projects funded under 23 U.S.C. 167.

The following provisions are from the U.S. Department of Labor regulations in 29 CFR 5.5 “Contract provisions and related matters” with minor revisions to conform to the FHWA-1273 format and FHWA program requirements.

1. Minimum wages (29 CFR 5.5)

a. *Wage rates and fringe benefits.* All laborers and mechanics employed or working upon the site of the work (or otherwise working in construction or development of the project under a development statute), will be paid unconditionally and not less often than once a week, and without subsequent deduction or rebate on any account (except such payroll deductions as are permitted by regulations issued by the Secretary of Labor under the Copeland Act (29 CFR part 3)), the full amount of basic hourly wages and bona fide fringe benefits (or cash equivalents thereof) due at time of payment computed at rates not less than those contained in the wage determination of the Secretary of Labor which is attached hereto and made a part hereof, regardless of any contractual relationship which may be alleged to exist between the contractor and such laborers and mechanics. As provided in paragraphs (d) and (e) of 29 CFR 5.5, the appropriate wage determinations are effective by operation of law even if they have not been attached to the contract. Contributions made or costs reasonably anticipated for bona fide fringe benefits under the Davis-Bacon Act (40 U.S.C. 3141(2)(B)) on behalf of laborers or mechanics are considered wages paid to such laborers or mechanics, subject to the provisions of paragraph 1.e. of this section; also, regular contributions made or costs incurred for more than a weekly period (but not less often than quarterly) under plans, funds, or programs which cover the particular weekly period, are deemed to be constructively made or incurred during such weekly period. Such laborers and mechanics must be paid the appropriate wage rate and fringe benefits on the wage determination for the classification(s) of work actually performed, without regard to skill, except as provided in paragraph 4. of this section. Laborers or mechanics performing work in more than one classification may be compensated at the rate specified for each classification for the time actually worked therein: *Provided,* That the employer's payroll records accurately set forth the time spent in each classification in which work is performed. The wage determination (including any additional classifications and wage rates conformed under paragraph 1.c. of this section) and the Davis-Bacon poster (WH–1321) must be posted at all times by the contractor and its subcontractors at the site of the work in a prominent and accessible place where it can be easily seen by the workers.

b. *Frequently recurring classifications.* (1) In addition to wage and fringe benefit rates that have been determined to be prevailing under the procedures set forth in 29 CFR part 1, a wage determination may contain, pursuant to § 1.3(f), wage and fringe benefit rates for classifications of laborers and mechanics for which conformance requests are regularly submitted pursuant to paragraph 1.c. of this section, provided that:

(i) The work performed by the classification is not performed by a classification in the wage determination for which a prevailing wage rate has been determined;

(ii) The classification is used in the area by the construction industry; and

(iii) The wage rate for the classification bears a reasonable relationship to the prevailing wage rates contained in the wage determination.

(2) The Administrator will establish wage rates for such classifications in accordance with paragraph 1.c.(1)(iii) of this section. Work performed in such a classification must be paid at no less than the wage and fringe benefit rate listed on the wage determination for such classification.

c. *Conformance.* (1) The contracting officer must require that any class of laborers or mechanics, including helpers, which is not listed in the wage determination and which is to be employed under the contract be classified in conformance with the wage determination. Conformance of an additional classification and wage rate and fringe benefits is appropriate only when the following criteria have been met:

(i) The work to be performed by the classification requested is not performed by a classification in the wage determination; and

(ii) The classification is used in the area by the construction industry; and

(iii) The proposed wage rate, including any bona fide fringe benefits, bears a reasonable relationship to the wage rates contained in the wage determination.

(2) The conformance process may not be used to split, subdivide, or otherwise avoid application of classifications listed in the wage determination.

(3) If the contractor and the laborers and mechanics to be employed in the classification (if known), or their representatives, and the contracting officer agree on the classification and wage rate (including the amount designated for fringe benefits where appropriate), a report of the action taken will be sent by the contracting officer by email to *DBAconformance@dol.gov*. The Administrator, or an authorized representative, will approve, modify, or disapprove every additional classification action within 30 days of receipt and so advise the contracting officer or will notify the contracting officer within the 30–day period that additional time is necessary.

(4) In the event the contractor, the laborers or mechanics to be employed in the classification or their representatives, and the contracting officer do not agree on the proposed classification and wage rate (including the amount designated for fringe benefits, where appropriate), the contracting officer will, by email to *DBAconformance@dol.gov,* refer the questions, including the views of all interested parties and the recommendation of the contracting officer, to the Administrator for determination. The Administrator, or an authorized representative, will issue a determination within 30 days of receipt and so advise the contracting officer or will notify the contracting officer within the 30–day period that additional time is necessary.

(5) The contracting officer must promptly notify the contractor of the action taken by the Wage and Hour Division under paragraphs 1.c.(3) and (4) of this section. The contractor must furnish a written copy of such determination to each affected worker or it must be posted as a part of the wage determination. The wage rate (including fringe benefits where appropriate) determined pursuant to paragraph 1.c.(3) or (4) of this section must be paid to all workers performing work in the classification under this contract from the first day on which work is performed in the classification.

d. *Fringe benefits not expressed as an hourly rate.* Whenever the minimum wage rate prescribed in the contract for a class of laborers or mechanics includes a fringe benefit which is not expressed as an hourly rate, the contractor may either pay the benefit as stated in the wage determination or may pay another bona fide fringe benefit or an hourly cash equivalent thereof.

e. *Unfunded plans.* If the contractor does not make payments to a trustee or other third person, the contractor may consider as part of the wages of any laborer or mechanic the amount of any costs reasonably anticipated in providing bona fide fringe benefits under a plan or program, *Provided,* That the Secretary of Labor has found, upon the written request of the contractor, in accordance with the criteria set forth in § 5.28, that the applicable standards of the Davis-Bacon Act have been met. The Secretary of Labor may require the contractor to set aside in a separate account assets for the meeting of obligations under the plan or program.

f. *Interest.* In the event of a failure to pay all or part of the wages required by the contract, the contractor will be required to pay interest on any underpayment of wages.

2. Withholding (29 CFR 5.5)

a. *Withholding requirements.* The contracting agency may, upon its own action, or must, upon written request of an authorized representative of the Department of Labor, withhold or cause to be withheld from the contractor so much of the accrued payments or advances as may be considered necessary to satisfy the liabilities of the prime contractor or any subcontractor for the full amount of wages and monetary relief, including interest, required by the clauses set forth in this section for violations of this contract, or to satisfy any such liabilities required by any other Federal contract, or federally assisted contract subject to Davis-Bacon labor standards, that is held by the same prime contractor (as defined in § 5.2). The necessary funds may be withheld from the contractor under this contract, any other Federal contract with the same prime contractor, or any other federally assisted contract that is subject to Davis-Bacon labor standards requirements and is held by the same prime contractor, regardless of whether the other contract was awarded or assisted by the same agency, and such funds may be used to satisfy the contractor liability for which the funds were withheld. In the event of a contractor's failure to pay any laborer or mechanic, including any apprentice or helper working on the site of the work all or part of the wages required by the contract, or upon the contractor's failure to submit the required records as discussed in paragraph 3.d. of this section, the contracting agency may on its own initiative and after written notice to the contractor, take such action as may be necessary to cause the suspension of any further payment, advance, or guarantee of funds until such violations have ceased.

b. *Priority to withheld funds.* The Department has priority to funds withheld or to be withheld in accordance with paragraph

2.a. of this section or Section V, paragraph 3.a., or both, over claims to those funds by:

(1) A contractor's surety(ies), including without limitation performance bond sureties and payment bond sureties;

(2) A contracting agency for its reprocurement costs;

(3) A trustee(s) (either a court-appointed trustee or a U.S. trustee, or both) in bankruptcy of a contractor, or a contractor's bankruptcy estate;

(4) A contractor's assignee(s);

(5) A contractor's successor(s); or

(6) A claim asserted under the Prompt Payment Act, 31 U.S.C. 3901–3907.

3. Records and certified payrolls (29 CFR 5.5)

a. *Basic record requirements* (1) *Length of record retention.* All regular payrolls and other basic records must be maintained by the contractor and any subcontractor during the course of the work and preserved for all laborers and mechanics working at the site of the work (or otherwise working in construction or development of the project under a development statute) for a period of at least 3 years after all the work on the prime contract is completed.

(2) *Information required.* Such records must contain the name; Social Security number; last known address, telephone number, and email address of each such worker; each worker's correct classification(s) of work actually performed; hourly rates of wages paid (including rates of contributions or costs anticipated for bona fide fringe benefits or cash equivalents thereof of the types described in 40 U.S.C. 3141(2)(B) of the Davis-Bacon Act); daily and weekly number of hours actually worked in total and on each covered contract; deductions made; and actual wages paid.

(3) *Additional records relating to fringe benefits.* Whenever the Secretary of Labor has found under paragraph 1.e. of this section that the wages of any laborer or mechanic include the amount of any costs reasonably anticipated in providing benefits under a plan or program described in 40 U.S.C. 3141(2)(B) of the Davis-Bacon Act, the contractor must maintain records which show that the commitment to provide such benefits is enforceable, that the plan or program is financially responsible, and that the plan or program has been communicated in writing to the laborers or mechanics affected, and records which show the costs anticipated or the actual cost incurred in providing such benefits.

(4) *Additional records relating to apprenticeship.* Contractors with apprentices working under approved programs must maintain written evidence of the registration of apprenticeship programs, the registration of the apprentices, and the ratios and wage rates prescribed in the applicable programs.

b. *Certified payroll requirements* (1) *Frequency and method of submission.* The contractor or subcontractor must submit weekly, for each week in which any DBA- or Related Acts-covered work is performed, certified payrolls to the contracting agency. The prime contractor is responsible for the submission of all certified payrolls by all subcontractors. A contracting agency or prime contractor may permit or require contractors to submit certified payrolls through an electronic system, as long as the electronic system requires a legally valid electronic signature; the system allows the contractor, the contracting agency, and the Department of Labor to access the certified payrolls upon request for at least 3 years after the work on the prime contract has been completed; and the contracting agency or prime contractor permits other methods of submission in situations where the contractor is unable or limited in its ability to use or access the electronic system.

(2) *Information required.* The certified payrolls submitted must set out accurately and completely all of the information required to be maintained under paragraph 3.a.(2) of this section, except that full Social Security numbers and last known addresses, telephone numbers, and email addresses must not be included on weekly transmittals. Instead, the certified payrolls need only include an individually identifying number for each worker (*e.g.,* the last four digits of the worker's Social Security number). The required weekly certified payroll information may be submitted using Optional Form WH–347 or in any other format desired. Optional Form WH–347 is available for this purpose from the Wage and Hour Division website at *https://www.dol.gov/sites/dolgov/files/WHD/legacy/files/wh347/.pdf* or its successor website. It is not a violation of this section for a prime contractor to require a subcontractor to provide full Social Security numbers and last known addresses, telephone numbers, and email addresses to the prime contractor for its own records, without weekly submission by the subcontractor to the contracting agency.

(3) *Statement of Compliance.* Each certified payroll submitted must be accompanied by a “Statement of Compliance,” signed by the contractor or subcontractor, or the contractor's or subcontractor's agent who pays or supervises the payment of the persons working on the contract, and must certify the following:

(i) That the certified payroll for the payroll period contains the information required to be provided under paragraph 3.b. of this section, the appropriate information and basic records are being maintained under paragraph 3.a. of this section, and such information and records are correct and complete;

(ii) That each laborer or mechanic (including each helper and apprentice) working on the contract during the payroll period has been paid the full weekly wages earned, without rebate, either directly or indirectly, and that no deductions have been made either directly or indirectly from the full wages earned, other than permissible deductions as set forth in 29 CFR part 3; and

(iii) That each laborer or mechanic has been paid not less than the applicable wage rates and fringe benefits or cash equivalents for the classification(s) of work actually performed, as specified in the applicable wage determination incorporated into the contract.

(4) *Use of Optional Form WH–347.* The weekly submission of a properly executed certification set forth on the reverse side of Optional Form WH–347 will satisfy the requirement for submission of the “Statement of Compliance” required by paragraph 3.b.(3) of this section.

(5) *Signature.* The signature by the contractor, subcontractor, or the contractor's or subcontractor's agent must be an original handwritten signature or a legally valid electronic signature.

(6) *Falsification.* The falsification of any of the above certifications may subject the contractor or subcontractor to civil or criminal prosecution under 18 U.S.C. 1001 and 31 U.S.C. 3729.

(7) *Length of certified payroll retention.* The contractor or subcontractor must preserve all certified payrolls during the course of the work and for a period of 3 years after all the work on the prime contract is completed.

c. *Contracts, subcontracts, and related documents.* The contractor or subcontractor must maintain this contract or subcontract and related documents including, without limitation, bids, proposals, amendments, modifications, and extensions. The contractor or subcontractor must preserve these contracts, subcontracts, and related documents during the course of the work and for a period of 3 years after all the work on the prime contract is completed.

d. *Required disclosures and access* (1) *Required record disclosures and access to workers.* The contractor or subcontractor must make the records required under paragraphs 3.a. through 3.c. of this section, and any other documents that the contracting agency, the State DOT, the FHWA, or the Department of Labor deems necessary to determine compliance with the labor standards provisions of any of the applicable statutes referenced by § 5.1, available for inspection, copying, or transcription by authorized representatives of the contracting agency, the State DOT, the FHWA, or the Department of Labor, and must permit such representatives to interview workers during working hours on the job.

(2) *Sanctions for non-compliance with records and worker access requirements.* If the contractor or subcontractor fails to submit the required records or to make them available, or refuses to permit worker interviews during working hours on the job, the Federal agency may, after written notice to the contractor, sponsor, applicant, owner, or other entity, as the case may be, that maintains such records or that employs such workers, take such action as may be necessary to cause the suspension of any further payment, advance, or guarantee of funds. Furthermore, failure to submit the required records upon request or to make such records available, or to permit worker interviews during working hours on the job, may be grounds for debarment action pursuant to § 5.12. In addition, any contractor or other person that fails to submit the required records or make those records available to WHD within the time WHD requests that the records be produced will be precluded from introducing as evidence in an administrative proceeding under 29 CFR part 6 any of the required records that were not provided or made available to WHD. WHD will take into consideration a reasonable request from the contractor or person for an extension of the time for submission of records. WHD will determine the reasonableness of the request and may consider, among other things, the location of the records and the volume of production.

(3) *Required information disclosures.* Contractors and subcontractors must maintain the full Social Security number and last known address, telephone number, and email address of each covered worker, and must provide them upon request to the contracting agency, the State DOT, the FHWA, the contractor, or the Wage and Hour Division of the Department of Labor for purposes of an investigation or other compliance action.

4. Apprentices and equal employment opportunity (29 CFR 5.5)

a. *Apprentices* (1) *Rate of pay.* Apprentices will be permitted to work at less than the predetermined rate for the work they perform when they are employed pursuant to and individually registered in a bona fide apprenticeship program registered with the U.S. Department of Labor, Employment and Training Administration, Office of Apprenticeship (OA), or with a State Apprenticeship Agency recognized by the OA. A person who is not individually registered in the program, but who has been certified by the OA or a State Apprenticeship Agency (where appropriate) to be eligible for probationary employment as an apprentice, will be permitted to work at less than the predetermined rate for the work they perform in the first 90 days of probationary employment as an apprentice in such a program. In the event the OA or a State Apprenticeship Agency recognized by the OA withdraws approval of an apprenticeship program, the contractor will no longer be permitted to use apprentices at less than the applicable predetermined rate for the work performed until an acceptable program is approved.

(2) *Fringe benefits.* Apprentices must be paid fringe benefits in accordance with the provisions of the apprenticeship program. If the apprenticeship program does not specify fringe benefits, apprentices must be paid the full amount of fringe benefits listed on the wage determination for the applicable classification. If the Administrator determines that a different practice prevails for the applicable apprentice classification, fringe benefits must be paid in accordance with that determination.

(3) *Apprenticeship ratio.* The allowable ratio of apprentices to journeyworkers on the job site in any craft classification must not be greater than the ratio permitted to the contractor as to the entire work force under the registered program or the ratio applicable to the locality of the project pursuant to paragraph 4.a.(4) of this section. Any worker listed on a payroll at an apprentice wage rate, who is not registered or otherwise employed as stated in paragraph 4.a.(1) of this section, must be paid not less than the applicable wage rate on the wage determination for the classification of work actually performed. In addition, any apprentice performing work on the job site in excess of the ratio permitted under this section must be paid not less than the applicable wage rate on the wage determination for the work actually performed.

(4) *Reciprocity of ratios and wage rates.* Where a contractor is performing construction on a project in a locality other than the locality in which its program is registered, the ratios and wage rates (expressed in percentages of the journeyworker's hourly rate) applicable within the locality in which the construction is being performed must be observed. If there is no applicable ratio or wage rate for the locality of the project, the ratio and wage rate specified in the contractor's registered program must be observed.

b. *Equal employment opportunity.* The use of apprentices and journeyworkers under this part must be in conformity with

the equal employment opportunity requirements of Executive Order 11246, as amended, and 29 CFR part 30.

c. Apprentices and Trainees (programs of the U.S. DOT).

Apprentices and trainees working under apprenticeship and skill training programs which have been certified by the Secretary of Transportation as promoting EEO in connection with Federal-aid highway construction programs are not subject to the requirements of paragraph 4 of this Section IV. 23 CFR 230.111(e)(2). The straight time hourly wage rates for apprentices and trainees under such programs will be established by the particular programs. The ratio of apprentices and trainees to journeyworkers shall not be greater than permitted by the terms of the particular program.

5. Compliance with Copeland Act requirements. The contractor shall comply with the requirements of 29 CFR part 3, which are incorporated by reference in this contract as provided in 29 CFR 5.5.

6. Subcontracts. The contractor or subcontractor must insert FHWA-1273 in any subcontracts, along with the applicable wage determination(s) and such other clauses or contract modifications as the contracting agency may by appropriate instructions require, and a clause requiring the subcontractors to include these clauses and wage determination(s) in any lower tier subcontracts. The prime contractor is responsible for the compliance by any subcontractor or lower tier subcontractor with all the contract clauses in this section. In the event of any violations of these clauses, the prime contractor and any subcontractor(s) responsible will be liable for any unpaid wages and monetary relief, including interest from the date of the underpayment or loss, due to any workers of lower-tier subcontractors, and may be subject to debarment, as appropriate. 29 CFR 5.5.

7. Contract termination: debarment. A breach of the contract clauses in 29 CFR 5.5 may be grounds for termination of the contract, and for debarment as a contractor and a subcontractor as provided in 29 CFR 5.12.

8. Compliance with Davis-Bacon and Related Act requirements. All rulings and interpretations of the Davis-Bacon and Related Acts contained in 29 CFR parts 1, 3, and 5 are herein incorporated by reference in this contract as provided in 29 CFR 5.5.

9. Disputes concerning labor standards. As provided in 29 CFR 5.5, disputes arising out of the labor standards provisions of this contract shall not be subject to the general disputes clause of this contract. Such disputes shall be resolved in accordance with the procedures of the Department of Labor set forth in 29 CFR parts 5, 6, and 7. Disputes within the meaning of this clause include disputes between the contractor (or any of its subcontractors) and the contracting agency, the U.S. Department of Labor, or the employees or their representatives.

10. Certification of eligibility. a. By entering into this contract, the contractor certifies that neither it nor any person or firm who has an interest in the contractor's firm is a person or firm ineligible to be awarded Government contracts by virtue of 40 U.S.C. 3144(b) or § 5.12(a).

b. No part of this contract shall be subcontracted to any person or firm ineligible for award of a Government contract by virtue of 40 U.S.C. 3144(b) or § 5.12(a).

c. The penalty for making false statements is prescribed in the U.S. Code, Title 18 Crimes and Criminal Procedure, 18 U.S.C. 1001.

11. Anti-retaliation. It is unlawful for any person to discharge, demote, intimidate, threaten, restrain, coerce, blacklist, harass, or in any other manner discriminate against, or to cause any person to discharge, demote, intimidate, threaten, restrain, coerce, blacklist, harass, or in any other manner discriminate against, any worker or job applicant for:

a. Notifying any contractor of any conduct which the worker reasonably believes constitutes a violation of the DBA, Related Acts, this part, or 29 CFR part 1 or 3;

b. Filing any complaint, initiating or causing to be initiated any proceeding, or otherwise asserting or seeking to assert on behalf of themselves or others any right or protection under the DBA, Related Acts, this part, or 29 CFR part 1 or 3;

c. Cooperating in any investigation or other compliance action, or testifying in any proceeding under the DBA, Related Acts, this part, or 29 CFR part 1 or 3; or

d. Informing any other person about their rights under the DBA, Related Acts, this part, or 29 CFR part 1 or 3.

V. CONTRACT WORK HOURS AND SAFETY STANDARDS ACT

Pursuant to 29 CFR 5.5(b), the following clauses apply to any Federal-aid construction contract in an amount in excess of $100,000 and subject to the overtime provisions of the Contract Work Hours and Safety Standards Act. These clauses shall be inserted in addition to the clauses required by 29 CFR 5.5(a) or 29 CFR 4.6. As used in this paragraph, the terms laborers and mechanics include watchpersons and guards.

1. Overtime requirements. No contractor or subcontractor contracting for any part of the contract work which may require or involve the employment of laborers or mechanics shall require or permit any such laborer or mechanic in any workweek in which he or she is employed on such work to work in excess of forty hours in such workweek unless such laborer or mechanic receives compensation at a rate not less than one and one-half times the basic rate of pay for all hours worked in excess of forty hours in such workweek. 29 CFR 5.5.

2. Violation; liability for unpaid wages; liquidated damages. In the event of any violation of the clause set forth in paragraph 1. of this section the contractor and any subcontractor responsible therefor shall be liable for the unpaid wages and interest from the date of the underpayment. In addition, such contractor and subcontractor shall be liable to the United States (in the case of work done under contract for the District of Columbia or a territory, to such District or to such territory), for liquidated damages. Such liquidated damages shall be computed with respect to each individual laborer or

mechanic, including watchpersons and guards, employed in violation of the clause set forth in paragraph 1. of this section, in the sum currently provided in 29 CFR 5.5(b)(2)* for each calendar day on which such individual was required or permitted to work in excess of the standard workweek of forty hours without payment of the overtime wages required by the clause set forth in paragraph 1. of this section.

* $31 as of January 15, 2023 (See 88 FR 88 FR 2210) as may be adjusted annually by the Department of Labor, pursuant to the Federal Civil Penalties Inflation Adjustment Act of 1990.

3. Withholding for unpaid wages and liquidated damages

a. *Withholding process.* The FHWA or the contracting agency may, upon its own action, or must, upon written request of an authorized representative of the Department of Labor, withhold or cause to be withheld from the contractor so much of the accrued payments or advances as may be considered necessary to satisfy the liabilities of the prime contractor or any subcontractor for any unpaid wages; monetary relief, including interest; and liquidated damages required by the clauses set forth in this section on this contract, any other Federal contract with the same prime contractor, or any other federally assisted contract subject to the Contract Work Hours and Safety Standards Act that is held by the same prime contractor (as defined in § 5.2). The necessary funds may be withheld from the contractor under this contract, any other Federal contract with the same prime contractor, or any other federally assisted contract that is subject to the Contract Work Hours and Safety Standards Act and is held by the same prime contractor, regardless of whether the other contract was awarded or assisted by the same agency, and such funds may be used to satisfy the contractor liability for which the funds were withheld.

b. *Priority to withheld funds.* The Department has priority to funds withheld or to be withheld in accordance with Section IV paragraph 2.a. or paragraph 3.a. of this section, or both, over claims to those funds by:

(1) A contractor's surety(ies), including without limitation performance bond sureties and payment bond sureties;

(2) A contracting agency for its reprocurement costs;

(3) A trustee(s) (either a court-appointed trustee or a U.S. trustee, or both) in bankruptcy of a contractor, or a contractor's bankruptcy estate;

(4) A contractor's assignee(s);

(5) A contractor's successor(s); or

(6) A claim asserted under the Prompt Payment Act, 31 U.S.C. 3901–3907.

4. Subcontracts. The contractor or subcontractor must insert in any subcontracts the clauses set forth in paragraphs 1. through 5. of this section and a clause requiring the subcontractors to include these clauses in any lower tier subcontracts. The prime contractor is responsible for compliance by any subcontractor or lower tier subcontractor with the clauses set forth in paragraphs 1. through 5. In the event of any violations of these clauses, the prime contractor and any subcontractor(s) responsible will be liable for any unpaid wages and monetary relief, including interest from the date of the underpayment or loss, due to any workers of lower-tier subcontractors, and associated liquidated damages and may be subject to debarment, as appropriate.

5. Anti-retaliation. It is unlawful for any person to discharge, demote, intimidate, threaten, restrain, coerce, blacklist, harass, or in any other manner discriminate against, or to cause any person to discharge, demote, intimidate, threaten, restrain, coerce, blacklist, harass, or in any other manner discriminate against, any worker or job applicant for:

a. Notifying any contractor of any conduct which the worker reasonably believes constitutes a violation of the Contract Work Hours and Safety Standards Act (CWHSSA) or its implementing regulations in this part;

b. Filing any complaint, initiating or causing to be initiated any proceeding, or otherwise asserting or seeking to assert on behalf of themselves or others any right or protection under CWHSSA or this part;

c. Cooperating in any investigation or other compliance action, or testifying in any proceeding under CWHSSA or this part; or

d. Informing any other person about their rights under CWHSSA or this part.

VI. SUBLETTING OR ASSIGNING THE CONTRACT

This provision is applicable to all Federal-aid construction contracts on the National Highway System pursuant to 23 CFR 635.116.

1. The contractor shall perform with its own organization contract work amounting to not less than 30 percent (or a greater percentage if specified elsewhere in the contract) of the total original contract price, excluding any specialty items designated by the contracting agency. Specialty items may be performed by subcontract and the amount of any such specialty items performed may be deducted from the total original contract price before computing the amount of work required to be performed by the contractor's own organization (23 CFR 635.116).

a. The term “perform work with its own organization” in paragraph 1 of Section VI refers to workers employed or leased by the prime contractor, and equipment owned or rented by the prime contractor, with or without operators. Such term does not include employees or equipment of a subcontractor or lower tier subcontractor, agents of the prime contractor, or any other assignees. The term may include payments for the costs of hiring leased employees from an employee leasing firm meeting all relevant Federal and State regulatory requirements. Leased employees may only be included in this term if the prime contractor meets all of the following conditions: (based on longstanding interpretation)

(1) the prime contractor maintains control over the supervision of the day-to-day activities of the leased employees;

(2) the prime contractor remains responsible for the quality of the work of the leased employees;

(3) the prime contractor retains all power to accept or exclude individual employees from work on the project; and

(4) the prime contractor remains ultimately responsible for the payment of predetermined minimum wages, the submission of payrolls, statements of compliance and all other Federal regulatory requirements.

b. "Specialty Items" shall be construed to be limited to work that requires highly specialized knowledge, abilities, or equipment not ordinarily available in the type of contracting organizations qualified and expected to bid or propose on the contract as a whole and in general are to be limited to minor components of the overall contract. 23 CFR 635.102.

2. Pursuant to 23 CFR 635.116(a), the contract amount upon which the requirements set forth in paragraph (1) of Section VI is computed includes the cost of material and manufactured products which are to be purchased or produced by the contractor under the contract provisions.

3. Pursuant to 23 CFR 635.116(c), the contractor shall furnish (a) a competent superintendent or supervisor who is employed by the firm, has full authority to direct performance of the work in accordance with the contract requirements, and is in charge of all construction operations (regardless of who performs the work) and (b) such other of its own organizational resources (supervision, management, and engineering services) as the contracting officer determines is necessary to assure the performance of the contract.

4. No portion of the contract shall be sublet, assigned or otherwise disposed of except with the written consent of the contracting officer, or authorized representative, and such consent when given shall not be construed to relieve the contractor of any responsibility for the fulfillment of the contract. Written consent will be given only after the contracting agency has assured that each subcontract is evidenced in writing and that it contains all pertinent provisions and requirements of the prime contract. (based on long-standing interpretation of 23 CFR 635.116).

5. The 30-percent self-performance requirement of paragraph (1) is not applicable to design-build contracts; however, contracting agencies may establish their own self-performance requirements. 23 CFR 635.116(d).

VII. SAFETY: ACCIDENT PREVENTION

This provision is applicable to all Federal-aid construction contracts and to all related subcontracts.

1. In the performance of this contract the contractor shall comply with all applicable Federal, State, and local laws governing safety, health, and sanitation (23 CFR Part 635). The contractor shall provide all safeguards, safety devices and protective equipment and take any other needed actions as it determines, or as the contracting officer may determine, to be reasonably necessary to protect the life and health of employees on the job and the safety of the public and to protect property in connection with the performance of the work covered by the contract. 23 CFR 635.108.

2. It is a condition of this contract, and shall be made a condition of each subcontract, which the contractor enters into pursuant to this contract, that the contractor and any subcontractor shall not permit any employee, in performance of the contract, to work in surroundings or under conditions which are unsanitary, hazardous or dangerous to his/her health or safety, as determined under construction safety and health standards (29 CFR Part 1926) promulgated by the Secretary of Labor, in accordance with Section 107 of the Contract Work Hours and Safety Standards Act (40 U.S.C. 3704). 29 CFR 1926.10.

3. Pursuant to 29 CFR 1926.3, it is a condition of this contract that the Secretary of Labor or authorized representative thereof, shall have right of entry to any site of contract performance to inspect or investigate the matter of compliance with the construction safety and health standards and to carry out the duties of the Secretary under Section 107 of the Contract Work Hours and Safety Standards Act (40 U.S.C. 3704).

VIII. FALSE STATEMENTS CONCERNING HIGHWAY PROJECTS

This provision is applicable to all Federal-aid construction contracts and to all related subcontracts.

In order to assure high quality and durable construction in conformity with approved plans and specifications and a high degree of reliability on statements and representations made by engineers, contractors, suppliers, and workers on Federal-aid highway projects, it is essential that all persons concerned with the project perform their functions as carefully, thoroughly, and honestly as possible. Willful falsification, distortion, or misrepresentation with respect to any facts related to the project is a violation of Federal law. To prevent any misunderstanding regarding the seriousness of these and similar acts, Form FHWA-1022 shall be posted on each Federal-aid highway project (23 CFR Part 635) in one or more places where it is readily available to all persons concerned with the project:

18 U.S.C. 1020 reads as follows:

"Whoever, being an officer, agent, or employee of the United States, or of any State or Territory, or whoever, whether a person, association, firm, or corporation, knowingly makes any false statement, false representation, or false report as to the character, quality, quantity, or cost of the material used or to be used, or the quantity or quality of the work performed or to be performed, or the cost thereof in connection with the submission of plans, maps, specifications, contracts, or costs of construction on any highway or related project submitted for approval to the Secretary of Transportation; or

Whoever knowingly makes any false statement, false representation, false report or false claim with respect to the character, quality, quantity, or cost of any work performed or to be performed, or materials furnished or to be furnished, in connection with the construction of any highway or related project approved by the Secretary of Transportation; or

Whoever knowingly makes any false statement or false representation as to material fact in any statement, certificate, or report submitted pursuant to provisions of the Federal-aid Roads Act approved July 11, 1916, (39 Stat. 355), as amended and supplemented;

Shall be fined under this title or imprisoned not more than 5 years or both."

IX. IMPLEMENTATION OF CLEAN AIR ACT AND FEDERAL WATER POLLUTION CONTROL ACT (42 U.S.C. 7606; 2 CFR 200.88; EO 11738)

This provision is applicable to all Federal-aid construction contracts in excess of $150,000 and to all related subcontracts. 48 CFR 2.101; 2 CFR 200.327.

By submission of this bid/proposal or the execution of this contract or subcontract, as appropriate, the bidder, proposer, Federal-aid construction contractor, subcontractor, supplier, or vendor agrees to comply with all applicable standards, orders or regulations issued pursuant to the Clean Air Act (42 U.S.C. 7401-7671q) and the Federal Water Pollution Control Act, as amended (33 U.S.C. 1251-1387). Violations must be reported to the Federal Highway Administration and the Regional Office of the Environmental Protection Agency. 2 CFR Part 200, Appendix II.

The contractor agrees to include or cause to be included the requirements of this Section in every subcontract, and further agrees to take such action as the contracting agency may direct as a means of enforcing such requirements. 2 CFR 200.327.

X. CERTIFICATION REGARDING DEBARMENT, SUSPENSION, INELIGIBILITY AND VOLUNTARY EXCLUSION

This provision is applicable to all Federal-aid construction contracts, design-build contracts, subcontracts, lower-tier subcontracts, purchase orders, lease agreements, consultant contracts or any other covered transaction requiring FHWA approval or that is estimated to cost $25,000 or more – as defined in 2 CFR Parts 180 and 1200. 2 CFR 180.220 and 1200.220.

1**. Instructions for Certification – First Tier Participants:**

a. By signing and submitting this proposal, the prospective first tier participant is providing the certification set out below.

b. The inability of a person to provide the certification set out below will not necessarily result in denial of participation in this covered transaction. The prospective first tier participant shall submit an explanation of why it cannot provide the certification set out below. The certification or explanation will be considered in connection with the department or agency's determination whether to enter into this transaction. However, failure of the prospective first tier participant to furnish a certification or an explanation shall disqualify such a person from participation in this transaction. 2 CFR 180.320.

c. The certification in this clause is a material representation of fact upon which reliance was placed when the contracting agency determined to enter into this transaction. If it is later determined that the prospective participant knowingly rendered an erroneous certification, in addition to other remedies available to the Federal Government, the contracting agency may terminate this transaction for cause of default. 2 CFR 180.325.

d. The prospective first tier participant shall provide immediate written notice to the contracting agency to whom this proposal is submitted if any time the prospective first tier participant learns that its certification was erroneous when submitted or has become erroneous by reason of changed circumstances. 2 CFR 180.345 and 180.350.

e. The terms "covered transaction," "debarred," "suspended," "ineligible," "participant," "person," "principal," and "voluntarily excluded," as used in this clause, are defined in 2 CFR Parts 180, Subpart I, 180.900-180.1020, and 1200. “First Tier Covered Transactions” refers to any covered transaction between a recipient or subrecipient of Federal funds and a participant (such as the prime or general contract). “Lower Tier Covered Transactions” refers to any covered transaction under a First Tier Covered Transaction (such as subcontracts). “First Tier Participant” refers to the participant who has entered into a covered transaction with a recipient or subrecipient of Federal funds (such as the prime or general contractor). “Lower Tier Participant” refers any participant who has entered into a covered transaction with a First Tier Participant or other Lower Tier Participants (such as subcontractors and suppliers).

f. The prospective first tier participant agrees by submitting this proposal that, should the proposed covered transaction be entered into, it shall not knowingly enter into any lower tier covered transaction with a person who is debarred, suspended, declared ineligible, or voluntarily excluded from participation in this covered transaction, unless authorized by the department or agency entering into this transaction. 2 CFR 180.330.

g. The prospective first tier participant further agrees by submitting this proposal that it will include the clause titled "Certification Regarding Debarment, Suspension, Ineligibility and Voluntary Exclusion-Lower Tier Covered Transactions," provided by the department or contracting agency, entering into this covered transaction, without modification, in all lower tier covered transactions and in all solicitations for lower tier covered transactions exceeding the $25,000 threshold. 2 CFR 180.220 and 180.300.

h. A participant in a covered transaction may rely upon a certification of a prospective participant in a lower tier covered transaction that is not debarred, suspended, ineligible, or voluntarily excluded from the covered transaction, unless it knows that the certification is erroneous. 2 CFR 180.300; 180.320, and 180.325. A participant is responsible for ensuring that its principals are not suspended, debarred, or otherwise ineligible to participate in covered transactions. 2 CFR 180.335. To verify the eligibility of its principals, as well as the eligibility of any lower tier prospective participants, each participant may, but is not required to, check the System for Award Management website (https://www.sam.gov/). 2 CFR 180.300, 180.320, and 180.325.

i. Nothing contained in the foregoing shall be construed to require the establishment of a system of records in order to render in good faith the certification required by this clause. The knowledge and information of the prospective participant is not required to exceed that which is normally possessed by a prudent person in the ordinary course of business dealings.

j. Except for transactions authorized under paragraph (f) of these instructions, if a participant in a covered transaction knowingly enters into a lower tier covered transaction with a person who is suspended, debarred, ineligible, or voluntarily excluded from participation in this transaction, in addition to other remedies available to the Federal Government, the department or agency may terminate this transaction for cause or default. 2 CFR 180.325.

* * * * *

2. Certification Regarding Debarment, Suspension, Ineligibility and Voluntary Exclusion – First Tier Participants:

a. The prospective first tier participant certifies to the best of its knowledge and belief, that it and its principals:

(1) Are not presently debarred, suspended, proposed for debarment, declared ineligible, or voluntarily excluded from participating in covered transactions by any Federal department or agency, 2 CFR 180.335;.

(2) Have not within a three-year period preceding this proposal been convicted of or had a civil judgment rendered against them for commission of fraud or a criminal offense in connection with obtaining, attempting to obtain, or performing a public (Federal, State, or local) transaction or contract under a public transaction; violation of Federal or State antitrust statutes or commission of embezzlement, theft, forgery, bribery, falsification or destruction of records, making false statements, or receiving stolen property, 2 CFR 180.800;

(3) Are not presently indicted for or otherwise criminally or civilly charged by a governmental entity (Federal, State or local) with commission of any of the offenses enumerated in paragraph (a)(2) of this certification, 2 CFR 180.700 and 180.800; and

(4) Have not within a three-year period preceding this application/proposal had one or more public transactions (Federal, State or local) terminated for cause or default. 2 CFR 180.335(d).

(5) Are not a corporation that has been convicted of a felony violation under any Federal law within the two-year period preceding this proposal (USDOT Order 4200.6 implementing appropriations act requirements); and

(6) Are not a corporation with any unpaid Federal tax liability that has been assessed, for which all judicial and administrative remedies have been exhausted, or have lapsed, and that is not being paid in a timely manner pursuant to an agreement with the authority responsible for collecting the tax liability (USDOT Order 4200.6 implementing appropriations act requirements).

b. Where the prospective participant is unable to certify to any of the statements in this certification, such prospective participant should attach an explanation to this proposal. 2 CFR 180.335 and 180.340.

* * * * *

3. **Instructions for Certification - Lower Tier Participants:**

(Applicable to all subcontracts, purchase orders, and other lower tier transactions requiring prior FHWA approval or estimated to cost $25,000 or more - 2 CFR Parts 180 and 1200). 2 CFR 180.220 and 1200.220.

a. By signing and submitting this proposal, the prospective lower tier participant is providing the certification set out below.

b. The certification in this clause is a material representation of fact upon which reliance was placed when this transaction was entered into. If it is later determined that the prospective lower tier participant knowingly rendered an erroneous certification, in addition to other remedies available to the Federal Government, the department, or agency with which this transaction originated may pursue available remedies, including suspension and/or debarment.

c. The prospective lower tier participant shall provide immediate written notice to the person to which this proposal is submitted if at any time the prospective lower tier participant learns that its certification was erroneous by reason of changed circumstances. 2 CFR 180.365.

d. The terms "covered transaction," "debarred," "suspended," "ineligible," "participant," "person," "principal," and "voluntarily excluded," as used in this clause, are defined in 2 CFR Parts 180, Subpart I, 180.900 – 180.1020, and 1200. You may contact the person to which this proposal is submitted for assistance in obtaining a copy of those regulations. “First Tier Covered Transactions” refers to any covered transaction between a recipient or subrecipient of Federal funds and a participant (such as the prime or general contract). “Lower Tier Covered Transactions” refers to any covered transaction under a First Tier Covered Transaction (such as subcontracts). “First Tier Participant” refers to the participant who has entered into a covered transaction with a recipient or subrecipient of Federal funds (such as the prime or general contractor). “Lower Tier Participant” refers any participant who has entered into a covered transaction with a First Tier Participant or other Lower Tier Participants (such as subcontractors and suppliers).

e. The prospective lower tier participant agrees by submitting this proposal that, should the proposed covered transaction be entered into, it shall not knowingly enter into any lower tier covered transaction with a person who is debarred, suspended, declared ineligible, or voluntarily excluded from participation in this covered transaction, unless authorized by the department or agency with which this transaction originated. 2 CFR 1200.220 and 1200.332.

f. The prospective lower tier participant further agrees by submitting this proposal that it will include this clause titled "Certification Regarding Debarment, Suspension, Ineligibility and Voluntary Exclusion-Lower Tier Covered Transaction," without modification, in all lower tier covered transactions and in all solicitations for lower tier covered transactions exceeding the $25,000 threshold. 2 CFR 180.220 and 1200.220.

g. A participant in a covered transaction may rely upon a certification of a prospective participant in a lower tier covered transaction that is not debarred, suspended, ineligible, or voluntarily excluded from the covered transaction, unless it knows that the certification is erroneous. A participant is responsible for ensuring that its principals are not suspended, debarred, or otherwise ineligible to participate in covered transactions. To verify the eligibility of its principals, as well as the eligibility of any lower tier prospective participants, each participant may, but is not required to, check the System for Award Management website (https://www.sam.gov/), which is compiled by the General Services Administration. 2 CFR 180.300, 180.320, 180.330, and 180.335.

h. Nothing contained in the foregoing shall be construed to require establishment of a system of records in order to render in good faith the certification required by this clause. The knowledge and information of participant is not required to exceed that which is normally possessed by a prudent person in the ordinary course of business dealings.

i. Except for transactions authorized under paragraph e of these instructions, if a participant in a covered transaction knowingly enters into a lower tier covered transaction with a person who is suspended, debarred, ineligible, or voluntarily

excluded from participation in this transaction, in addition to other remedies available to the Federal Government, the department or agency with which this transaction originated may pursue available remedies, including suspension and/or debarment. 2 CFR 180.325.

* * * * *

4. Certification Regarding Debarment, Suspension, Ineligibility and Voluntary Exclusion--Lower Tier Participants:

a. The prospective lower tier participant certifies, by submission of this proposal, that neither it nor its principals:

(1) is presently debarred, suspended, proposed for debarment, declared ineligible, or voluntarily excluded from participating in covered transactions by any Federal department or agency, 2 CFR 180.355;

(2) is a corporation that has been convicted of a felony violation under any Federal law within the two-year period preceding this proposal (USDOT Order 4200.6 implementing appropriations act requirements); and

(3) is a corporation with any unpaid Federal tax liability that has been assessed, for which all judicial and administrative remedies have been exhausted, or have lapsed, and that is not being paid in a timely manner pursuant to an agreement with the authority responsible for collecting the tax liability. (USDOT Order 4200.6 implementing appropriations act requirements)

b. Where the prospective lower tier participant is unable to certify to any of the statements in this certification, such prospective participant should attach an explanation to this proposal.

* * * * *

XI. CERTIFICATION REGARDING USE OF CONTRACT FUNDS FOR LOBBYING

This provision is applicable to all Federal-aid construction contracts and to all related subcontracts which exceed $100,000. 49 CFR Part 20, App. A.

1. The prospective participant certifies, by signing and submitting this bid or proposal, to the best of his or her knowledge and belief, that:

a. No Federal appropriated funds have been paid or will be paid, by or on behalf of the undersigned, to any person for influencing or attempting to influence an officer or employee of any Federal agency, a Member of Congress, an officer or employee of Congress, or an employee of a Member of Congress in connection with the awarding of any Federal contract, the making of any Federal grant, the making of any Federal loan, the entering into of any cooperative agreement, and the extension, continuation, renewal, amendment, or modification of any Federal contract, grant, loan, or cooperative agreement.

b. If any funds other than Federal appropriated funds have been paid or will be paid to any person for influencing or attempting to influence an officer or employee of any Federal agency, a Member of Congress, an officer or employee of Congress, or an employee of a Member of Congress in connection with this Federal contract, grant, loan, or cooperative agreement, the undersigned shall complete and submit Standard Form-LLL, "Disclosure Form to Report Lobbying," in accordance with its instructions.

2. This certification is a material representation of fact upon which reliance was placed when this transaction was made or entered into. Submission of this certification is a prerequisite for making or entering into this transaction imposed by 31 U.S.C. 1352. Any person who fails to file the required certification shall be subject to a civil penalty of not less than $10,000 and not more than $100,000 for each such failure.

3. The prospective participant also agrees by submitting its bid or proposal that the participant shall require that the language of this certification be included in all lower tier subcontracts, which exceed $100,000 and that all such recipients shall certify and disclose accordingly.

XII. USE OF UNITED STATES-FLAG VESSELS:

This provision is applicable to all Federal-aid construction contracts, design-build contracts, subcontracts, lower-tier subcontracts, purchase orders, lease agreements, or any other covered transaction. 46 CFR Part 381.

This requirement applies to material or equipment that is acquired for a specific Federal-aid highway project. 46 CFR 381.7. It is not applicable to goods or materials that come into inventories independent of an FHWA funded-contract.

When oceanic shipments (or shipments across the Great Lakes) are necessary for materials or equipment acquired for a specific Federal-aid construction project, the bidder, proposer, contractor, subcontractor, or vendor agrees:

1. To utilize privately owned United States-flag commercial vessels to ship at least 50 percent of the gross tonnage (computed separately for dry bulk carriers, dry cargo liners, and tankers) involved, whenever shipping any equipment, material, or commodities pursuant to this contract, to the extent such vessels are available at fair and reasonable rates for United States-flag commercial vessels. 46 CFR 381.7.

2. To furnish within 20 days following the date of loading for shipments originating within the United States or within 30 working days following the date of loading for shipments originating outside the United States, a legible copy of a rated, ‘on-board’ commercial ocean bill-of-lading in English for each shipment of cargo described in paragraph (b)(1) of this section to both the Contracting Officer (through the prime contractor in the case of subcontractor bills-of-lading) and to the Office of Cargo and Commercial Sealift (MAR-620), Maritime Administration, Washington, DC 20590. (MARAD requires copies of the ocean carrier's (master) bills of lading, certified onboard, dated, with rates and charges. These bills of lading may contain business sensitive information and therefore may be submitted directly to MARAD by the Ocean Transportation Intermediary on behalf of the contractor). 46 CFR 381.7.

ATTACHMENT A - EMPLOYMENT AND MATERIALS PREFERENCE FOR APPALACHIAN DEVELOPMENT HIGHWAY SYSTEM OR APPALACHIAN LOCAL ACCESS ROAD CONTRACTS (23 CFR 633, Subpart B, Appendix B)
This provision is applicable to all Federal-aid projects funded under the Appalachian Regional Development Act of 1965.

1. During the performance of this contract, the contractor undertaking to do work which is, or reasonably may be, done as on-site work, shall give preference to qualified persons who regularly reside in the labor area as designated by the DOL wherein the contract work is situated, or the subregion, or the Appalachian counties of the State wherein the contract work is situated, except:

a. To the extent that qualified persons regularly residing in the area are not available.

b. For the reasonable needs of the contractor to employ supervisory or specially experienced personnel necessary to assure an efficient execution of the contract work.

c. For the obligation of the contractor to offer employment to present or former employees as the result of a lawful collective bargaining contract, provided that the number of nonresident persons employed under this subparagraph (1c) shall not exceed 20 percent of the total number of employees employed by the contractor on the contract work, except as provided in subparagraph (4) below.

2. The contractor shall place a job order with the State Employment Service indicating (a) the classifications of the laborers, mechanics and other employees required to perform the contract work, (b) the number of employees required in each classification, (c) the date on which the participant estimates such employees will be required, and (d) any other pertinent information required by the State Employment Service to complete the job order form. The job order may be placed with the State Employment Service in writing or by telephone. If during the course of the contract work, the information submitted by the contractor in the original job order is substantially modified, the participant shall promptly notify the State Employment Service.

3. The contractor shall give full consideration to all qualified job applicants referred to him by the State Employment Service. The contractor is not required to grant employment to any job applicants who, in his opinion, are not qualified to perform the classification of work required.

4. If, within one week following the placing of a job order by the contractor with the State Employment Service, the State Employment Service is unable to refer any qualified job applicants to the contractor, or less than the number requested, the State Employment Service will forward a certificate to the contractor indicating the unavailability of applicants. Such certificate shall be made a part of the contractor's permanent project records. Upon receipt of this certificate, the contractor may employ persons who do not normally reside in the labor area to fill positions covered by the certificate, notwithstanding the provisions of subparagraph (1c) above.

5. The provisions of 23 CFR 633.207(e) allow the contracting agency to provide a contractual preference for the use of mineral resource materials native to the Appalachian region.

6. The contractor shall include the provisions of Sections 1 through 4 of this Attachment A in every subcontract for work which is, or reasonably may be, done as on-site work.

Texas Department of Transportation

The wage rates listed herein are those predetermined by the Secretary of Labor and State Statue and listed in the United States Department of Labor's (USDOL) General Decisions dated 01-03-2025 and are the minimum wages to be paid accordingly for each specified classification. To determine the applicable wage rate zone, a list entitled "TEXAS COUNTIES IDENTIFIED BY WAGE RATE ZONES" is provided in the contract. Any wage rate that is not listed in the USDOL's general decision, must be requested by the contractor through the completion of an Additional Classification and Wage Rate Request and be submitted for approval. A blank cell indicates that the classification and wage rate are not listed on the USDOL's general decision and therefore must be requested by the contractor through the completion of an Additional Classification and Wage Rate Request. IMPORTANT NOTICE FOR STATE PROJECTS: only the controlling wage rate zone applies to the contract. Effective 01-03-2025.

CLASS. #	CLASSIFICATION DESCRIPTION	ZONE TX02 *(TX20250002)	ZONE TX03 *(TX20250003)	ZONE TX04 *(TX20250004)	ZONE TX05 *(TX20250005)	ZONE TX06 *(TX20250006)	ZONE TX07 *(TX20250007)	ZONE TX08 *(TX20255008)	ZONE TX24 *(TX20250024)	ZONE TX25 *(TX20250025)	ZONE TX27 *(TX20250027)	ZONE TX28 *(TX20250028)	ZONE TX29 *(TX20250029)	ZONE TX30 *(TX20250030)	ZONE TX37 *(TX20250037)	ZONE TX38 *(TX20250038)	ZONE TX42 *(TX20250042)
1428	Agricultural Tractor Operator						$12.69					$12.35			$11.75		
1300	Asphalt Distributor Operator	$14.87	$13.48	$13.88	$15.72	$15.58	$15.55	$15.72	$13.28	$15.32	$15.62	$14.36	$14.25	$14.03	$13.75	$14.06	$14.40
1303	Asphalt Paving Machine Operator	$13.40	$12.25	$12.35	$13.87	$14.05	$14.36	$14.20	$13.26	$13.99	$14.68	$12.92	$13.44	$12.53	$14.00	$14.32	$12.99
1106	Asphalt Raker	$12.28	$10.61	$12.02	$14.21	$11.65	$12.12	$11.64	$11.44	$12.69	$12.05	$11.34	$11.67	$11.40	$12.59	$12.36	$11.78
1112	Batching Plant Operator, Asphalt																
1115	Batching Plant Operator, Concrete																
1214	Blaster																
1615	Boom Truck Operator						$18.36										
1444	Boring Machine Operator																
1305	Broom or Sweeper Operator	$11.21	$10.33	$10.08	$11.99		$11.04	$11.62		$11.74	$11.41	$10.30		$10.23	$10.60	$12.68	$11.05
1144	Communications Cable Installer																
1124	Concrete Finisher, Paving and Structures	$13.55	$12.46	$13.16	$12.85	$12.64	$12.56	$12.77	$12.44	$14.12	$13.04	$13.38	$12.64	$12.80	$12.79	$12.98	$13.32
1318	Concrete Pavement Finishing Machine Operator				$16.05		$15.48			$16.05		$19.31				$13.07	
1315	Concrete Paving, Curing, Float, Texturing Machine Operator											$16.34				$11.71	
1333	Concrete Saw Operator				$14.67					$14.48	$17.33					$13.99	
1399	Concrete/Gunite Pump Operator																
1344	Crane Operator, Hydraulic 80 tons or less				$18.22		$18.36			$18.12	$18.04	$20.21			$18.63	$13.86	
1345	Crane Operator, Hydraulic Over 80 Tons																
1342	Crane Operator, Lattice Boom 80 Tons or Less	$16.82	$14.39	$13.85	$17.27		$15.87			$17.27		$14.67			$16.42	$14.97	$13.87
1343	Crane Operator, Lattice Boom Over 80 Tons				$20.52		$19.38			$20.52		$17.49			$25.13	$15.80	
1306	Crawler Tractor Operator	$13.96	$16.63	$13.62	$14.26		$15.67			$14.07	$13.15	$13.38			$14.60	$13.68	$13.50
1351	Crusher or Screen Plant Operator																
1446	Directional Drilling Locator						$11.67										
1445	Directional Drilling Operator				$20.32		$17.24										
1139	Electrician	$20.96		$19.87	$19.80		$26.35		$20.27	$19.80		$20.92				$27.11	$19.87
1347	Excavator Operator, 50,000 pounds or less	$13.46	$12.56	$13.67	$17.19		$12.88	$14.38	$13.49	$17.19		$13.88			$14.09	$12.71	$14.42
1348	Excavator Operator, Over 50,000 pounds		$15.23	$13.52	$17.04		$17.71			$16.99	$18.80	$16.22				$14.53	$13.52
1150	Flagger	$9.30	$9.10	$8.50	$10.28	$8.81	$9.45	$8.70		$10.06	$9.71	$9.03	$8.81	$9.08	$9.90	$10.33	$8.10
1151	Form Builder/Setter, Structures	$13.52	$12.30	$13.38	$12.91	$12.71	$12.87	$12.38	$12.26	$13.84	$12.98	$13.07	$13.61	$12.82	$14.73	$12.23	$12.25
1160	Form Setter, Paving & Curb	$12.36	$12.16	$13.93	$11.83	$10.71	$12.94			$13.16	$12.54	$11.33	$10.69		$13.33	$12.34	$13.93
1360	Foundation Drill Operator, Crawler Mounted				$17.99					$17.99						$17.43	
1363	Foundation Drill Operator, Truck Mounted		$16.86	$22.05	$21.51		$16.93			$21.07	$20.20	$20.76		$17.54	$21.39	$15.89	$22.05
1369	Front End Loader Operator, 3 CY or Less	$12.28	$13.49	$13.40	$13.85		$13.04	$13.15	$13.29	$13.69	$12.64	$12.89			$13.51	$13.32	$12.17
1372	Front End Loader Operator, Over 3 CY	$12.77	$13.69	$12.33	$14.96		$13.21	$12.86	$13.57	$14.72	$13.75	$12.32			$13.19	$13.17	$13.02
1329	Joint Sealer																
1172	Laborer, Common	$10.30	$9.86	$10.08	$10.51	$10.71	$10.50	$10.24	$10.58	$10.72	$10.45	$10.30	$10.25	$10.03	$10.54	$11.02	$10.15
1175	Laborer, Utility	$11.80	$11.53	$12.70	$12.17	$11.81	$12.27	$12.11	$11.33	$12.32	$11.80	$11.53	$11.23	$11.50	$11.95	$11.73	$12.37
1346	Loader/Backhoe Operator	$14.18	$12.77	$12.97	$15.68		$14.12			$15.18	$13.58	$12.87		$13.21	$14.13	$14.29	$12.90
1187	Mechanic	$20.14	$15.47	$17.47	$17.74	$17.00	$17.10			$17.68	$18.94	$18.58	$17.00	$16.61	$18.46	$16.96	$17.47

CLASS. #	CLASSIFICATION DESCRIPTION	ZONE TX02 *(TX20250002)	ZONE TX03 *(TX20250003)	ZONE TX04 *(TX20250004)	ZONE TX05 *(TX20250005)	ZONE TX06 *(TX20250006)	ZONE TX07 *(TX20250007)	ZONE TX08 *(TX20250008)	ZONE TX24 *(TX20250024)	ZONE TX25 *(TX20240025)	ZONE TX27 *(TX20250027)	ZONE TX28 *(TX20250028)	ZONE TX29 *(TX20250029)	ZONE TX30 *(TX20250030)	ZONE TX37 *(TX20250037)	ZONE TX38 *(TX20250038)	ZONE TX42 *(TX20250042)
1380	Milling Machine Operator	$15.54	$14.64	$12.22	$14.29		$14.18			$14.32	$14.35	$12.86			$14.75	$13.53	$12.80
1390	Motor Grader Operator, Fine Grade	$17.49	$16.52	$16.88	$17.12	$18.37	$18.51	$16.69	$16.13	$17.19	$18.35	$17.07	$17.74	$17.47	$17.08	$15.69	$20.01
1393	Motor Grader Operator, Rough	$16.15	$14.62	$15.83	$16.20	$17.07	$14.63	$18.50		$16.02	$16.44	$15.12	$16.85	$14.47	$17.39	$14.23	$15.53
1413	Off Road Hauler			$10.08	$12.26		$11.88			$12.25		$12.23			$13.00	$14.60	
1196	Painter, Structures					$21.29	$18.34						$21.29			$18.62	
1396	Pavement Marking Machine Operator	$16.42		$13.10	$13.55		$19.17	$12.01		$13.63	$14.60	$13.17		$16.65	$10.54	$11.18	$13.10
1443	Percussion or Rotary Drill Operator																
1202	Piledriver															$14.95	
1205	Pipelayer		$11.87	$14.64	$13.17	$11.17	$12.79		$11.37	$13.24	$12.66	$13.24	$11.17	$11.67		$12.12	$14.64
1384	Reclaimer/Pulverizer Operator	$12.85			$11.90		$12.88			$11.01		$10.46					
1500	Reinforcing Steel Worker	$13.50	$14.07	$17.53	$16.17		$14.00			$16.18	$12.74	$15.83		$17.10		$15.15	$17.72
1402	Roller Operator, Asphalt	$10.95		$11.96	$13.29		$12.78	$11.61		$13.08	$12.36	$11.68			$11.71	$11.95	$11.50
1405	Roller Operator, Other	$10.36		$10.44	$11.82		$10.50	$11.64		$11.51	$10.59	$10.30		$12.04	$12.85	$11.57	$10.66
1411	Scraper Operator	$10.61	$11.07	$10.85	$12.88		$12.27		$11.12	$12.96	$11.88	$12.43		$11.22	$13.95	$13.47	$10.89
1417	Self-Propelled Hammer Operator																
1194	Servicer	$13.98	$12.34	$14.11	$14.74		$14.51	$15.56	$13.44	$14.58	$14.31	$13.83		$12.43	$13.72	$13.97	$14.11
1513	Sign Erector																
1708	Slurry Seal or Micro-Surfacing Machine Operator																
1341	Small Slipform Machine Operator									$15.96							
1515	Spreader Box Operator	$12.60		$13.12	$14.71		$14.04			$14.73	$13.84	$13.68		$13.45	$11.83	$13.58	$14.05
1705	Structural Steel Welder															$12.85	
1509	Structural Steel Worker						$19.29									$14.39	
1339	Subgrade Trimmer																
1143	Telecommunication Technician																
1145	Traffic Signal/Light Pole Worker						$16.00										
1440	Trenching Machine Operator, Heavy						$18.48										
1437	Trenching Machine Operator, Light																
1609	Truck Driver Lowboy-Float	$14.46	$13.63	$13.41	$15.00	$15.93	$15.66			$16.24	$16.39	$14.30	$16.62	$15.63	$14.28	$16.03	$13.41
1612	Truck Driver Transit-Mix				$14.14					$14.14							
1600	Truck Driver, Single Axle	$12.74	$10.82	$10.75	$13.04	$11.61	$11.79	$13.53	$13.16	$12.31	$13.40	$10.30	$11.61		$11.97	$11.46	$10.75
1606	Truck Driver, Single or Tandem Axle Dump Truck	$11.33	$14.53	$11.95	$12.95		$11.68		$14.06	$12.62	$11.45	$12.28		$13.08	$11.68	$11.48	$11.10
1607	Truck Driver, Tandem Axle Tractor withSemi Trailer	$12.49	$12.12	$12.50	$13.42		$12.81	$13.16		$12.86	$16.22	$12.50			$13.80	$12.27	$12.50
1441	Tunneling Machine Operator, Heavy																
1442	Tunneling Machine Operator, Light																
1706	Welder		$14.02		$14.86		$15.97		$13.74	$14.84					$13.78		
1520	Work Zone Barricade Servicer	$10.30	$12.88	$11.46	$11.70	$11.57	$11.85	$10.77		$11.68	$12.20	$11.22	$11.51	$12.96	$10.54	$11.67	$11.76

Notes:

*Represents the USDOL wage decision.

Any worker employed on this project shall be paid at the rate of one and one half (1-1/2) times the regular rate for every hour worked in excess of forty (40) hours per week.

For reference, the titles and descriptions for the classifications listed here are detailed further in the AGC of Texas' *Standard Job Classifications and Descriptions for Highway, Heavy, Utilities, and Industrial Construction in Texas* posted on the AGC's Web site for any contractor.

TEXAS COUNTIES IDENTIFIED BY
WAGE RATE ZONES: 2, 3, 4, 5, 6, 7, 8, 24, 25, 27, 28, 29, 30, 37, 38, 42

County Name	Zone	County Name	Zone	County Name	Zone	County Name	Zone
Anderson	28	Donley	37	Karnes	27	Reagan	37
Andrews	37	Duval	30	Kaufman	25	Real	37
Angelina	28	Eastland	37	Kendall	7	Red River	28
Aransas	29	Ector	2	Kenedy	30	Reeves	8
Archer	25	Edwards	8	Kent	37	Refugio	27
Armstrong	2	El Paso	24	Kerr	27	Roberts	37
Atascosa	7	Ellis	25	Kimble	37	Robertson	7
Austin	38	Erath	28	King	37	Rockwall	25
Bailey	37	Falls	28	Kinney	8	Runnels	37
Bandera	7	Fannin	28	Kleberg	27	Rusk	4
Bastrop	7	Fayette	27	Knox	37	Sabine	28
Baylor	37	Fisher	37	Lamar	28	San Augustine	28
Bee	27	Floyd	37	Lamb	37	San Jacinto	38
Bell	7	Foard	37	Lampasas	7	San Patricio	29
Bexar	7	Fort Bend	38	LaSalle	30	San Saba	37
Blanco	27	Franklin	28	Lavaca	27	Schleicher	37
Borden	37	Freestone	28	Lee	27	Scurry	37
Bosque	28	Frio	27	Leon	28	Shackelford	37
Bowie	4	Gaines	37	Liberty	38	Shelby	28
Brazoria	38	Galveston	38	Limestone	28	Sherman	37
Brazos	7	Garza	37	Lipscomb	37	Smith	4
Brewster	8	Gillespie	27	Live Oak	27	Somervell	28
Briscoe	37	Glasscock	37	Llano	27	Starr	30
Brooks	30	Goliad	29	Loving	37	Stephens	37
Brown	37	Gonzales	27	Lubbock	2	Sterling	37
Burleson	7	Gray	37	Lynn	37	Stonewall	37
Burnet	27	Grayson	25	Madison	28	Sutton	8
Caldwell	7	Gregg	4	Marion	28	Swisher	37
Calhoun	29	Grimes	28	Martin	37	Tarrant	25
Callahan	25	Guadalupe	7	Mason	27	Taylor	2
Cameron	3	Hale	37	Matagorda	27	Terrell	8
Camp	28	Hall	37	Maverick	30	Terry	37
Carson	2	Hamilton	28	McCulloch	37	Throckmorton	37
Cass	28	Hansford	37	McLennan	7	Titus	28
Castro	37	Hardeman	37	McMullen	30	Tom Green	2
Chambers	38	Hardin	38	Medina	7	Travis	7
Cherokee	28	Harris	38	Menard	37	Trinity	28
Childress	37	Harrison	42	Midland	2	Tyler	28
Clay	25	Hartley	37	Milam	28	Upshur	4
Cochran	37	Haskell	37	Mills	37	Upton	37
Coke	37	Hays	7	Mitchell	37	Uvalde	30
Coleman	37	Hemphill	37	Montague	37	Val Verde	8
Collin	25	Henderson	28	Montgomery	38	Van Zandt	28
Collingsworth	37	Hidalgo	3	Moore	37	Victoria	6
Colorado	27	Hill	28	Morris	28	Walker	28
Comal	7	Hockley	37	Motley	37	Waller	38
Comanche	37	Hood	28	Nacogdoches	28	Ward	37
Concho	37	Hopkins	28	Navarro	28	Washington	28
Cooke	37	Houston	28	Newton	28	Webb	3
Coryell	7	Howard	37	Nolan	37	Wharton	27
Cottle	37	Hudspeth	8	Nueces	29	Wheeler	37
Crane	37	Hunt	25	Ochiltree	37	Wichita	5
Crockett	8	Hutchinson	37	Oldham	37	Wilbarger	37
Crosby	2	Irion	2	Orange	38	Willacy	30
Culberson	8	Jack	28	Palo Pinto	28	Williamson	7
Dallam	37	Jackson	27	Panola	28	Wilson	7
Dallas	25	Jasper	28	Parker	25	Winkler	37
Dawson	37	Jeff Davis	8	Parmer	37	Wise	25
Deaf Smith	37	Jefferson	38	Pecos	8	Wood	28
Delta	25	Jim Hogg	30	Polk	28	Yoakum	37
Denton	25	Jim Wells	27	Potter	2	Young	37
DeWitt	27	Johnson	25	Presidio	8	Zapata	30
Dickens	37	Jones	25	Rains	28	Zavala	30
Dimmit	30			Randall	2		

01/03/2025

CONTRACTOR'S ASSURANCE

(Subcontracts-Federal Aid Projects)

By signing this proposal, the contractor is giving assurances that all subcontract agreements will incorporate the Standard Specification and Special Provisions to Section 9.9., Payment Provisions for Subcontractors, all subcontract agreements exceeding $2,000 will incorporate the applicable Wage Determination Decision, and all subcontract agreements will incorporate the following:

Special Provision	Certification of Nondiscrimination in Employment
Special Provision	Notice of Requirement for Affirmative Action to Ensure Equal Employment Opportunity (Executive Order 11246)
Special Provision	Standard Federal Equal Employment Opportunity
Construction	Construction Specifications (Executive Order 11246)
Form FHWA 1273	Required Contract Provisions Federal-aid Construction Contracts (Form FHWA 1273 must also be physically attached to subcontracts and all lower-tier subcontracts)
Special Provision	Nondiscrimination (Include provisions of Sections 3.1 – 3.6 in all subcontracts and agreements for materials)
Special Provision	Cargo Preference Act Requirements in Federal-Aid Contracts
Special Provision	Disadvantaged Business Enterprise in Federal-Aid Contracts

CERTIFICATION TO NOT BOYCOTT ENERGY COMPANIES

Pursuant to Texas Government Code §809.051, the Department must include a provision requiring a written verification affirming that the Contractor does not boycott energy companies, as defined in Government Code §809.001, and will not boycott energy companies during the term of the contract. This provision applies to a contract that:

1) is with a Contractor that is not a sole proprietorship,
2) is with a Contractor with 10 or more full-time employees, and
3) has a value of $100,000 or more.

By signing the contract, the Contractor certifies that it does not boycott energy companies and will not boycott energy companies during the term of this contract. “Boycott” means taking any action that is intended to penalize, inflict economic harm on, or limit commercial relations with a company because the company: (1) engages in the exploration, production, utilization, transportation, sale, or manufacturing of fossil fuel-based energy and does not commit or pledge to meet environmental standards beyond applicable federal and state law; or (2) does business with a company described by (1).

Violation of this certification may result in action by the Department.

CERTIFICATION TO NOT BOYCOTT ISRAEL

Pursuant to Texas Government Code §2271.002, the Department must include a provision requiring a written verification affirming that the Contractor does not boycott Israel, as defined in Government Code §808.001, and will not boycott Israel during the term of the contract. This provision applies to a contract that:

1) is with a Contractor that is not a sole proprietorship,
2) is with a Contractor with 10 or more full-time employees, and
3) has a value of $100,000 or more.

By signing the contract, the Contractor certifies that it does not boycott Israel and will not boycott Israel during the term of this contract. “Boycott” means refusing to deal with, terminating business activities with, or otherwise taking any action that is intended to penalize, inflict economic harm on, or limit commercial relations specifically with Israel, or with a person or entity doing business in Israel or in an Israeli-controlled territory, but does not include an action made for ordinary business purposes.

Violation of this certification may result in action by the Department.

CERTIFICATION REGARDING DISCLOSURE OF PUBLIC INFORMATION

Pursuant to Subchapter J, Chapter 552, Texas Government Code, contractors executing a contract with a governmental body that results in the expenditure of at least $1 million in public funds must:

1) preserve all contracting information* as provided by the records retention requirements applicable to Texas Department of Transportation (TxDOT) for the duration of the contract,
2) on request of TxDOT, promptly provide any contracting information related to the contract that is in the custody or possession of the entity, and
3) on completion of the contract, either:
    a. provide, at no cost to TxDOT, all contracting information related to the contract that is in the custody or possession of the entity, or
    b. preserve the contracting information related to the contract as provided by the records retention requirements applicable to TxDOT

The requirements of Subchapter J, Chapter 552, Government Code, may apply to this contract, and the contractor or vendor agrees that the contract can be terminated if the contractor or vendor knowingly or intentionally fails to comply with a requirement of that subchapter.

By entering into Contract, the Contractor agrees to:

- provide, or make available, to TxDOT and any authorized governmental investigating or auditing agency all records, including electronic and payment records related to the contract, for the same period provided by the records retention schedule applicable to TxDOT, and
- ensure that all subcontracts include a clause requiring the same.

* As defined in Government Code §552.003, “Contracting information” means the following information maintained by a governmental body or sent between a governmental body and a vendor, contractor, potential vendor, or potential contractor:

1) information in a voucher or contract relating to the receipt or expenditure of public funds by a governmental body;
2) solicitation or bid documents relating to a contract with a governmental body;
3) communications sent between a governmental body and a vendor, contractor, potential vendor, or potential contractor during the solicitation, evaluation, or negotiation of a contract;
4) documents, including bid tabulations, showing the criteria by which a governmental body evaluates each vendor, contractor, potential vendor, or potential contractor responding to a solicitation and, if applicable, an explanation of why the vendor or contractor was selected; and
5) communications and other information sent between a governmental body and a vendor or contractor related to the performance of a final contract with the governmental body or work performed on behalf of the governmental body.

CERTIFICATION TO NOT DISCRIMINATE AGAINST FIREARM ENTITIES OR FIREARM TRADE ASSOCIATIONS

Pursuant to Texas Government Code §2274.002, the Department must include a provision requiring a written verification affirming that the Contractor:

1) does not have a practice, policy, guidance, or directive that discriminates against a firearm entity or firearm trade association, as defined in Government Code §2274.001, and
2) will not discriminate against a firearm entity or firearm trade association during the term of the contract.

This provision applies to a contract that:

1) is with a Contractor that is not a sole proprietorship,
2) is with a Contractor with 10 or more full-time employees, and
3) has a value of $100,000 or more.

By signing the contract, the Contractor certifies that it does not discriminate against a firearm entity or firearm trade association as described and will not do so during the term of this contract. "Discriminate against a firearm entity or firearm trade association" means, with respect to the entity or association, to: (1) refuse to engage in the trade of any goods or services with the entity or association based solely on its status as a firearm entity or firearm trade association; (2) refrain from continuing an existing business relationship with the entity or association based solely on its status as a firearm entity or firearm trade association; or (3) terminate an existing business relationship with the entity or association based solely on its status as a firearm entity or firearm trade association. "Discriminate against a firearm entity or firearm trade association" does not include: (1) the established policies of a merchant, retail seller, or platform that restrict or prohibit the listing or selling of ammunition, firearms, or firearm accessories; (2) a company's refusal to engage in the trade of any goods or services, decision to refrain from continuing an existing business relationship, or decision to terminate an existing business relationship to comply with federal, state, or local law, policy, or regulations or a directive by a regulatory agency, or for any traditional business reason that is specific to the customer or potential customer and not based solely on an entity's or association's status as a firearm entity or firearm trade association.

Violation of this certification may result in action by the Department.

CHILD SUPPORT STATEMENT

Under Section 231.006, Family Code, the vendor or applicant certifies that the individual or business entity named in this contract, bid, or application is not ineligible to receive the specified grant, loan, or payment and acknowledges that this contract may be terminated and payment may be withheld if this certification is inaccurate.

State of Texas Child Support Business Ownership Form

County: Webb

Project Name: West Laredo Multi-modal Trade Corridor – Phase II (Flecha/Las Cruces Realignment Project)

TxDOT CSJ: 0922-33-076

LG Project Number: DMO 2012 (628)

Business Entity Submitting Bid:_____

Section 231.006, Family Code, requires a bid for a contract paid from state funds to include the names and social security number of individuals owning 25% or more of the business entity submitting the bid.

1. In the spaces below please provide the names and social security number of individuals owning 25% or more of the business.

Name	Social Security Number
_____	_____
_____	_____
_____	_____
_____	_____

2. Please check the box below if no individual owns 25% or more of the business.

( ) No individual own 25% or more of the business.

Except as provided by Section 231.302(d), Family Code, a social security number is confidential and may be disclosed only for the purpose of responding to a request for information from an agency operating under the provisions of Part A and D to Title IV of the Federal Social Security Act (42 USC Section 601-617 and 651-699).

Under Section 231.006, Family Code, the vendor or applicant certifies that the individual or business entity named in this contract, bid, or application is not ineligible to receive the specified grant, loan, or payment and acknowledges that this contract may be terminated and payment may be withheld if this certification is inaccurate.

The information collected on this form will be maintained by City of Laredo. With few exceptions, you are entitled on request to be informed about the information collected about you. Under Sections 552.021 and 552.023 of the Texas Government Code, you also are entitled to receive and review the information. Under Section 559.004 of the Government Code, you are also entitled to have information about you corrected that you believe is incorrect.

_____ _____

Signature Date

_____

Printed Name

IF THIS PROJECT IS A JOINT VENTURE,

ALL PARTIES TO THE JOINT VENTURE MUST PROVIDE A COMPLETED FORM.

Prohibition on Certain Telecommunications Equipment or Services

The Federal Register Notice issued the Final Rule and states that the amendment to 2 CFR 200.216 is effective on August 13, 2020. The new 2 CFR 200.471 regulation provides clarity that the telecommunications and video surveillance costs associated with 2 CFR 200.216 are unallowable for services and equipment from these specific providers. OMB's Federal Register Notice includes the new 2 CFR 200.216 and 2 CFR 200.471 regulations.

Per the Federal Law referenced above, use of services, systems, or services or systems that contain components produced by any of the following manufacturers is strictly prohibited for use on this project. Therefore, for any telecommunications, CCTV, or video surveillance equipment, services or systems cannot be manufactured by, or have components manufactured by:

- Huawei Technologies Company,
- ZTE Corporation (any subsidiary and affiliate of such entities),
- Hyatera Communications Corporation,
- Hangzhou Hikvision Digital Technology Company,
- Dahua Technology Company (any subsidiary and affiliate of such entities).

Violation of this requirement will require replacement of the equipment at the contractor's expense.

Special Provision to Item 000
Nondiscrimination

1. DESCRIPTION

All recipients of federal financial assistance are required to comply with various nondiscrimination laws, including Title VI of the Civil Rights Act of 1964, as amended (Title VI). Title VI forbids discrimination against anyone in the United States on the grounds of race, color, or national origin by any agency receiving federal funds.

The Owner, as a recipient of federal financial assistance, and under Title VI and related statutes, ensures that no person will on the grounds of race, religion (where the primary objective of the financial assistance is to provide employment in accordance with 42 USC 2000d-3), color, national origin, sex, age, or disability be excluded from participation in, be denied the benefits of, or otherwise be subjected to discrimination under any of Owner's programs or activities.

2. DEFINITION OF TERMS

Where the term "Contractor" appears in the following six nondiscrimination clauses, the term "Contractor" is understood to include all parties to Contracts or agreements with the Owner.

3. NONDISCRIMINATION PROVISIONS

During the performance of this Contract, the Contractor agrees as follows.

3.1. **Compliance with Regulations**. The Contractor must comply with the Regulations pertinent to nondiscrimination in federally assisted programs of the United States Department of Transportation 49 CFR 21, as they may be amended from time to time, (hereinafter referred to as the Regulations), which are herein incorporated by reference and made a part of this Contract.

3.2. **Nondiscrimination**. The Contractor, regarding the work performed during the Contract, must not discriminate on the grounds of race, color, or national origin in the selection and retention of subcontractors, including procurements of materials and leases of equipment. The Contractor must not participate either directly or indirectly in the discrimination prohibited by Section 21.5 of the Regulations, including employment practices when the Contract covers a program set forth in Appendix B of the Regulations.

3.3. **Solicitations for Subcontracts, Including Procurements of Materials and Equipment**. In all solicitations either by competitive bidding or negotiation made by the Contractor for work to be performed under a subcontract, including procurements of materials or leases of equipment, the Contractor must notify each potential subcontractor or supplier of the Contractor's obligations under this Contract and the Regulations relative to nondiscrimination on the grounds of race, color, or national origin.

3.4. **Information and Reports**. The Contractor must provide all information and reports required by the Regulations or directives issued pursuant thereto, and must permit access to its books, records, accounts, other sources of information, and facilities as may be determined by the Recipient or the Owner to be pertinent to ascertain compliance with such Regulations, orders, and instructions. Where any information required of a Contractor is in the exclusive possession of another who fails or refuses to furnish this information, the Contractor must so certify to the Owner, or the Texas Department of Transportation as appropriate, and must set forth what efforts it has made to obtain the information.

3.5. **Sanctions for Noncompliance**. In the event of the Contractor's noncompliance with the nondiscrimination provisions of this Contract, the Owner must impose such Contract sanctions as it or the Owner may

determine to be appropriate, including, but not limited to actions defined in Article 5.1., “Authority of Engineer.”

3.6. **Incorporation of Provisions**. The Contractor must include the provisions of Sections 3.1–3.6 in every subcontract, including procurements of materials and leases of equipment, unless exempt by the Regulations or directives issued pursuant thereto. The Contractor must take such action with respect to any subcontract or procurement as the Owner may direct as a means of enforcing such provisions, including sanctions for noncompliance: Provided, however, that, in the event a Contractor becomes involved in, or is threatened with, litigation with a subcontractor or supplier as a result of such direction, the Contractor may request the Owner to enter into such litigation to protect the interests of the Owner, and, in addition, the Contractor may request the United States to enter into such litigation to protect the interests of the United States.

Special Provision to Item 000
Certification of Nondiscrimination in Employment

1. GENERAL

By signing this proposal, the Bidder certifies that it has participated in a previous Contract or subcontract subject to the equal opportunity clause, as required by Executive Order (EO) 10925, 11114, or 11246, or if it has not participated in a previous Contract of this type, or if it has had previous Contracts or subcontracts and has not filed, it will file with the Joint Reporting Committee, the Director of the Office of Federal Contract Compliance, a Federal Government contracting or administering agency, or the former President's Committee on Equal Employment Opportunity (EEO), all reports due under the applicable filing requirements.

Note—The above certification is required by the EEO Regulations of the Secretary of Labor [41 CFR 60-1.7(b)(1)], and must be submitted by Bidders and proposed subcontractors only in connection with Contracts and subcontracts that are subject to the equal opportunity clause. Contracts and subcontracts that are exempt from the equal opportunity clause are set forth in 41 CFR 60-1.5. (Generally only Contracts or subcontracts of $10,000 or less are exempt.)

Currently, Standard Form 100 (EEO-1) is the only report required by the EOs or their implementing regulations.

Proposed prime Contractors and subcontractors that have participated in a previous Contract or subcontract subject to the EO and have not filed the required reports should note that 41 CFR 60-1.7(b)(1) prevents the award of Contracts and subcontracts unless such Contractor submits a report covering the delinquent period or such other period specified by FHWA or by the Director, Office of Federal Contract Compliance, U.S. Department of Labor.

Special Provision 000

Cargo Preference Act Requirements in Federal Aid Contracts

1. DESCRIPTION

All recipients of federal financial assistance are required to comply with the U.S. Department of Transportation's Cargo Preference Act requirements, 46 CFR 381, "Use of United States-Flag Vessels."

This requirement applies to material or equipment that is acquired specifically for a federal-aid highway project. It is not applicable to goods or materials that come into inventories independent of an FHWA-funded Contract.

When oceanic shipments are necessary for materials or equipment acquired for a specific federal-aid construction project, the Contractor agrees to:

- use privately owned United States-flag commercial vessels to ship at least 50% of the gross tonnage (computed separately for dry bulk carriers, dry cargo liners, and tankers) involved, whenever shipping any equipment, material, or commodities pursuant to this Contract, to the extent such vessels are available at fair and reasonable rates for United States-flag commercial vessels;

- furnish a legible copy of a rated, onboard commercial ocean bill of lading in English for each shipment of cargo described in Paragraph (b)(1) of 46 CFR 381, Section 7, "Federal Grant, Guaranty, Loan and Advance of Funds Agreements," within 20 days following the date of loading for shipments originating within the United States or within 30 working days following the date of loading for shipments originating outside the United States, to both the Engineer (through the prime Contractor in the case of subcontractor bills of lading) and to the Division of National Cargo, Office of Market Development, Maritime Administration, Washington, DC 20590; and

- insert the substance of the provisions of this clause in all subcontracts issued pursuant to this Contract.

Special Provision to Item 000
Schedule of Liquidated Damages

The dollar amount of daily contract administration Liquidated Damages per Working Day is $850.00

FOR AMOUNT OF CONTRACT		
From More Than	**To and Including**	**Amount of Penalty Per Day over Contract Time**
$0	$100,000	$200
100,000	500,000	400
500,000	1,000,000	550
1,000,000	2,000,000	700
2,000,000	5,000,000	850
5,000,000	10,000,000	1,200
10,000,000	15,000,000	1,500
15,000,000	20,000,000	1,700
20,000,000	Over 20,000,000	2,500

Special Provision to Item 000
Disadvantaged Business Enterprise in Federal-Aid Contracts

1. DESCRIPTION

The purpose of this Special Provision is to carry out the U.S. Department of Transportation's (DOT) policy of ensuring nondiscrimination in the award and administration of DOT-assisted Contracts and creating a level playing field on which firms owned and controlled by individuals who are determined to be socially and economically disadvantaged can compete fairly for DOT-assisted Contracts.

2. DISADVANTAGED BUSINESS ENTERPRISE IN FEDERAL-AID CONTRACTS

2.1. **Policy.** It is the policy of the DOT and the Texas Department of Transportation (Department) that DBEs, as defined in 49 CFR Part 26, Subpart A, and the Department's DBE Program, will have the opportunity to participate in the performance of Contracts financed in whole or in part with federal funds. The DBE requirements of 49 CFR Part 26, and the Department's DBE Program, apply to this Contract as follows.

The Contractor must solicit DBEs through reasonable and available means, as defined in 49 CFR Part 26, Appendix A, and the Department's DBE Program, or show a good faith effort to meet the DBE goal for this Contract.

The Contractor, subrecipient, or subcontractor will not discriminate on the basis of race, color, national origin, or sex in the performance of this Contract. Carry out applicable requirements of 49 CFR Part 26 in the award and administration of DOT-assisted Contracts. Failure to carry out these requirements is a material breach of this Contract, which may result in the termination of this Contract or such other remedy as the Owner deems appropriate.

The requirements of this Special Provision must be physically included in any subcontract.

By signing the Contract proposal, the Bidder is certifying that the DBE goal as stated in the proposal will be met by obtaining commitments from eligible DBEs or that the Bidder will provide acceptable evidence of good faith effort to meet the commitment.

2.2. **Definitions.**

2.2.1. **Administrative Reconsideration.** A process by which the low bidder may request reconsideration when the Department determines the good faith effort (GFE) requirements have not been met.

2.2.2. **Commercially Useful Function (CUF).** A CUF occurs when a DBE has the responsibility for the execution of the work and carrying out such responsibilities by actually performing, managing, and supervising the work.

2.2.3. **Disadvantaged Business Enterprise (DBE).** A for-profit small business certified through the Texas Unified Certification Program in accordance with 49 CFR Part 26, that is at least 51% owned by one or more socially and economically disadvantaged individuals, or in the case of a publicly owned business, in which is at least 51% of the stock is owned by one or more socially and economically disadvantaged individuals, and whose management and daily business operations are controlled by one or more of the individuals who own it.

2.2.4. **DBE Joint Venture.** An association of a DBE firm and one or more other firms to carry out a single business enterprise for profit for which purpose they combine their property, capital, efforts, skills, and knowledge, and in which the DBE is responsible for a distinct, clearly defined portion of the work of the Contract and whose share in the capital contribution, control, management, risks, and profits of the joint venture are commensurate with its ownership interest.

2.2.5. **DOT.** The U.S. Department of Transportation, including the Office of the Secretary, the Federal Highway Administration (FHWA), the Federal Transit Administration (FTA), and the Federal Aviation Administration (FAA).

2.2.6. **Federal-Aid Contract.** Any Contract between the Owner and a Contractor that is paid for in whole or in part with DOT financial assistance.

2.2.7. **Good Faith Effort.** All necessary and reasonable steps to achieve the contract goal which, by their scope, intensity, and appropriateness to the objective, could reasonably be expected to obtain enough DBE participation, even if not fully successful. Good faith efforts are evaluated before award and throughout performance of the Contract. For guidance on good faith efforts, see 49 CFR Part 26, Appendix A.

2.2.8. **North American Industry Classification System (NAICS).** A designation that best describes the primary business of a firm. The NAICS is described in the North American Industry Classification Manual—United States, which is available on the Internet at the U.S. Census Bureau website: https://www.census.gov/naics/.

2.2.9. **Race-Conscious.** A measure or program that is focused specifically on assisting only DBEs, including women-owned businesses.

2.2.10. **Race-Neutral DBE Participation.** Any participation by a DBE through customary competitive procurement procedures.

2.2.11. **Texas Unified Certification Program (TUCP) Directory.** An online directory listing all DBEs currently certified by the TUCP. The Directory identifies DBE firms whose participation on a Contract may be counted toward achievement of the assigned DBE Contract goal.

2.3. **Contractor's Responsibilities.**

2.3.1. **DBE Liaison Officer**. Designate a DBE liaison officer who will administer the Contractor's DBE program and who will be responsible for maintenance of records of efforts and contacts made to subcontract with DBEs.

2.3.2. **Compliance Tracking System (CTS)**. This Contract is subject to Contract compliance tracking. Contractors and DBEs are required to provide any noted and requested Contract compliance-related data to the Owner. This includes, but is not limited to, commitments, payments, substitutions, and good faith efforts. Contractors and DBEs are responsible for responding by any noted response date or due date to any instructions or request for information by the Owner, and to check the system on a regular basis. A Contractor is responsible for ensuring all DBEs have completed all requested items and that their contact information is accurate and up-to-date. The Owner may require additional information related to the Contract to be provided at any time before, during, or after contract award.

In its sole discretion, the Owner may require that contract compliance tracking data be submitted by Contractors and DBEs in an alternative format prescribed by the Owner.

2.3.3. **Apparent Low Bidder.** The apparent low bidder must submit DBE commitments to satisfy the DBE goal or submit good faith effort Form 2603 and supporting documentation demonstrating why the goal could not be achieved, in whole or part, no later than 5 calendar days after bid opening. The means of transmittal and the risk of timely receipt of the information will be the bidder's responsibility and no extension of the 5-calendar-day timeframe will be allowed for any reason.

2.3.4. **DBE Contractor.** A DBE Contractor may receive credit toward the DBE goal for work performed by its own forces and work subcontracted to DBEs. If a DBE subcontracts to a non-DBE, that information must be reported monthly.

2.3.5. **DBE Committal.** Only those DBEs certified by the TUCP are eligible to be used for goal attainment. The Department maintains the TUCP DBE Directory. The Directory can be accessed at the following Internet address: https://txdot.txdotcms.com/.

A DBE must be certified on the day the commitment is considered and at time of subcontract execution. It is the Contractor's responsibility to ensure firms identified for participation are approved certified DBE firms.

The Bidder is responsible to ensure that all submittals are checked for accuracy. Any and all omissions, deletions, and/or errors that may affect the end result of the commitment package are the sole liabilities of the bidder.

Commitments in excess of the goal are considered race-neutral commitments.

2.3.6. **Good Faith Effort Requirements.** A Contractor who cannot meet the Contract goal, in whole or in part, must make adequate good faith efforts to obtain DBE participation as so stated and defined in 49 CFR Part 26, Appendix A.

2.3.6.1. **Administrative Reconsideration.** If the Owner determines that the apparent low bidder has failed to satisfy the good faith efforts requirement, the Owner will notify the Bidder of the failure and will give the Bidder an opportunity to provide written documentation or argument concerning the issue of whether it met the goal or made adequate good faith efforts to do so.

The Bidder must request an administrative reconsideration of that determination within 3 days of the date of receipt of the notice. The request must be submitted directly to the Owner.

If a request for administrative reconsideration is not filed within the period specified the determination made is final and further administrative appeal is barred.

If a reconsideration request is timely received, the reconsideration decision will be made by the Department's DBE liaison officer or, if the DBE liaison officer took part in the original determination, the Department's executive director will appoint a department employee to perform the administrative reconsideration. The employee will hold a senior leadership position and will report directly to the executive director.

The meeting or written documentation must be provided or held within 7 days of the date the request was submitted.

The Department will provide to the Owner a written decision, which will then be provided to the Bidder if the Bidder did or did not make adequate good faith efforts to meet the Contract goal. The reconsideration decision is final and is not administratively appealed to DOT.

2.3.7. **Determination of DBE Participation.** The work performed by the DBE must be reasonably construed to be included in the work area and NAICS work code identified by the Contractor in the approved commitment.

Participation by a DBE on a Contract will not be counted toward DBE goals until the amount of the participation has been paid to the DBE.

Payments made to a DBE that was not on the original commitment may be counted toward the Contract goal if that DBE was certified as a DBE before the execution of the subcontract and has performed a Commercially Useful Function.

The total amount paid to the DBE for work performed with its own forces is counted toward the DBE goal. When a DBE subcontracts part of the work of its Contract to another firm, the value of the subcontracted work may be counted toward DBE goals only if the subcontractor is itself a DBE.

DBE Goal credit for the DBE subcontractors leasing of equipment or purchasing of supplies from the Contractor or its affiliates is not allowed. Project materials or supplies acquired from an affiliate of the Contractor cannot directly or indirectly (second or lower tier subcontractor) be used for DBE goal credit.

If a DBE firm is declared ineligible due to DBE decertification after the execution of the DBE's subcontract, the DBE firm may complete the work and the DBE firm's participation will be counted toward the Contract goal. If the DBE firm is decertified before the DBE firm has signed a subcontract, the Contractor is obligated to replace the ineligible DBE firm or demonstrate that it has made good faith efforts to do so.

The Contractor may count 100% of its expenditure to a DBE manufacturer. According to 49 CFR 26.55(e)(1)(i), a DBE manufacturer is a firm that operates or maintains a factory or establishment that produces, on the premises, the materials, supplies, articles, or equipment required under the Contract and of the general character described by the specifications.

The Contractor may count only 60% of its expenditure to a DBE regular dealer. According to 49 CFR 26.55(e)(2)(i), a DBE regular dealer is a firm that owns, operates, or maintains a store, warehouse, or other establishment in which the materials, supplies, articles, or equipment of the general character described by the specifications and required under the Contract are bought, kept in stock, and regularly sold or leased to the public in the usual course of business. A firm may be a regular dealer in such bulk items as petroleum products, steel, cement, gravel, stone, or asphalt without owning, operating, or maintaining a place of business if the firm both owns and operates distribution equipment for the products. Any supplementing of regular dealers' own distribution equipment must be by a long-term lease agreement and not on an ad hoc or contract-by-contract basis. A long-term lease with a third-party transportation company is not eligible for 60% goal credit.

With respect to materials or supplies purchased from a DBE that is neither a manufacturer nor a regular dealer, the Contractor may count the entire amount of fees or commissions charged for assistance in the procurement of the materials and supplies, or fees or transportation charges for the delivery of materials or supplies required on a jobsite.

A Contractor may count toward its DBE goal a portion of the total value of the Contract amount paid to a DBE joint venture equal to the distinct, clearly defined portion of the work of the Contract performed by the DBE.

2.3.8. **Commercially Useful Function.** It is the Contractor's obligation to ensure that each DBE used on federal-assisted contracts performs a commercially useful function on the Contract.

The Owner will monitor performance during the Contract to ensure each DBE is performing a CUF.

Under the terms established in 49 CFR 26.55, a DBE performs a CUF when it is responsible for execution of the work of the Contract and is carrying out its responsibilities by actually performing, managing, and supervising the work involved.

With respect to material and supplies used on the Contract, a DBE must be responsible for negotiating price, determining quality and quantity, ordering the material, installing the material, if applicable, and paying for the material itself.

With respect to trucking, the DBE trucking firm must own and operate at least one fully licensed, insured, and operational truck used on the Contract. The DBE may lease trucks from another DBE firm, including an owner-operator who is certified as a DBE. The DBE who leases trucks from another DBE receives credit for the total value of the transportation services the lessee DBE provides on the Contract. The DBE may also lease trucks from a non-DBE firm, including from an owner-operator. The DBE that leases trucks equipped

with drivers from a non-DBE is entitled to credit for the total value of transportation services provided by non-DBE leased trucks equipped with drivers not to exceed the value of transportation services on the Contract provided by DBE-owned trucks or leased trucks with DBE employee drivers. Additional participation by non-DBE owned trucks equipped with drivers receives credit only for the fee or commission it receives as a result of the lease arrangement.

A DBE does not perform a CUF when its role is limited to that of an extra participant in a transaction, Contract, or project through which funds are passed to obtain the appearance of DBE participation. The Owner will evaluate similar transactions involving non-DBEs to determine whether a DBE is an extra participant.

If a DBE does not perform or exercise responsibility for at least 30% of the total cost of its Contract with its own work force, or the DBE subcontracts a greater portion of the work than would be expected on the basis of normal industry practice for the type of work involved, the Owner will presume that the DBE is not performing a CUF.

If the Owner determines that a DBE is not performing a CUF, no work performed by such DBE will count as eligible participation. The denial period of time may occur before or after a determination has been made by the Owner.

In case of the denial of credit for non-performance of a CUF, the Contractor will be required to provide a substitute DBE to meet the Contract goal or provide an adequate good faith effort when applicable.

2.3.8.1. **Rebuttal of a Finding of No Commercially Useful Function.** Consistent with the provisions of 49 CFR 26.55(c)(4)&(5), before the Owner makes a final finding that no CUF has been performed by a DBE, the Owner will notify the DBE and provide the DBE the opportunity to provide rebuttal information.

CUF determinations are not subject to administrative appeal to DOT.

2.3.9. **Joint Check.** The use of joint checks between a Contractor and a DBE is allowed with Owner approval. To obtain approval, the Contractor must submit a completed Form 2178, “DBE Joint Check Approval,” to the Owner.

The Owner will closely monitor the use of joint checks to ensure that such a practice does not erode the independence of the DBE nor inhibit the DBE’s ability to perform a CUF. When joint checks are used, DBE credit toward the Contract goal will be allowed only when the subcontractor is performing a CUF in accordance with 49 CFR 26.55(c)(1).

Long-term or open-ended joint checking arrangements may be a basis for further scrutiny and may result in the lack of participation towards the Contract goal requirement if DBE independence cannot be established.

Joint checks will not be allowed simply for the convenience of the Contractor.

If the proper procedures are not followed or the Owner determines that the arrangements result in a lack of independence for the DBE involved, no credit for the DBE’s participation as it relates to the material cost will be used toward the Contract goal requirement, and the Contractor will need to make up the difference elsewhere on the project.

2.3.10. **DBE Termination and Substitution.** No DBE named in the commitment submitted under Section 2.3.5. will be terminated for convenience, in whole or part, without the Owner’s approval. This includes, but is not limited to, instances in which a Contractor seeks to perform work originally designated for a DBE subcontractor with its own forces or those of an affiliate, a non-DBE firm, or with another DBE firm.

Unless consent is provided, the Contractor will not be entitled to any payment for work or material unless it is performed or supplied by the listed DBE.

The Contractor, before submitting its request to terminate, must first give written notice to the DBE of its intent to terminate and the reason for the termination. The Contractor will copy the Owner on the Notice of Intent to terminate.

The DBE has 5 calendar days to respond to the Contractor's notice and will advise the Contractor and the Owner of the reasons, if any, why it objects to the proposed termination of its subcontract and why the Owner should not approve the prime Contractor's request for termination.

The Owner may provide a shorter response time if required in a particular case as a matter of public necessity.

The Owner will consider both the Contractor's request and DBE's stated position before approving the request. The Owner may provide a written approval only if it agrees, for reasons stated in its concurrence document, that the Contractor has good cause to terminate the DBE. If the Owner does not approve the request, the Contractor must continue to use the committed DBE firm in accordance with the Contract. For guidance on what good cause includes, see 49 CFR 26.53.

Good cause does not exist if the Contractor seeks to terminate, reduce, or substitute a DBE it relied upon to obtain the Contract so that the Contractor can self-perform the work for which the DBE firm was engaged.

When a DBE subcontractor is terminated, make good faith efforts to find, as a substitute for the original DBE, another DBE to perform, at least to the extent needed to meet the established Contract goal, the work that the original DBE was to have performed under the Contract.

Submit the completed Form 2228, "DBE Termination Substitution Request," within seven (7) days, which may be extended for an additional 7 days if necessary at the request of the Contractor. The Owner will provide a written determination to the Contractor stating whether or not good faith efforts have been demonstrated. If the Owner determines that good faith efforts were not demonstrated, the Contractor will have the opportunity to appeal the determination to the Department.

2.3.11. **Reports and Records.** By the 15th of each month and after work begins, report payments to meet the DBE goal and for DBE race-neutral participation on projects with or without goals. These payment reports will be required until all DBE subcontracting or material supply activity is completed. Negative payment reports are required when no activity has occurred in a monthly period.

Notify the Owner if payment to any DBE subcontractor is withheld or reduced.

Before receiving final payment from the Owner, the Contractor must indicate a final payment on the compliance tracking system. The final payment is a summary of all payments made to the DBEs on the project.

All records must be retained for a period of 3 years following completion of the Contract work, and must be available at reasonable times and places for inspection by authorized representatives of the Owner, the Department, or the DOT. Provide copies of subcontracts or agreements and other documentation upon request.

2.3.12. **Failure to Comply.** If the Owner determines the Contractor has failed to demonstrate good faith efforts to meet the assigned goal, the Contractor will be given an opportunity for reconsideration by the Department.

A Contractor's failure to comply with the requirements of this Special Provision will constitute a material breach of this Contract. In such a case, the Owner reserves the right to terminate the Contract; to deduct the

amount of DBE goal not accomplished by DBEs from the money due or to become due the Contractor; or to secure a refund, not as a penalty but as liquidated damages, to the Owner or such other remedy or remedies as the Owner deems appropriate.

2.3.13. **Investigations.** The Owner may conduct reviews or investigations of participants as necessary. All participants, including, but not limited to, DBEs and complainants using DBE Subcontractors to meet the Contract goal, are required to cooperate fully and promptly with compliance reviews, investigations, and other requests for information.

2.3.14. **Falsification and Misrepresentation.** If the Owner determines that a Contractor or subcontractor was a knowing and willing participant in any intended or actual subcontracting arrangement contrived to artificially inflate DBE participation or any other business arrangement determined by the Owner to be unallowable, or if the Contractor engages in repeated violations, falsification, or misrepresentation, the Owner may:

- refuse to count any fraudulent or misrepresented DBE participation;
- withhold progress payments to the Contractor commensurate with the violation;
- refer the matter to the Office of Inspector General of the US Department of Transportation for investigation; and/or
- seek any other available contractual remedy.

Special Provision to Item 6L
Control of Materials

Item 6L, "Control of Materials" of the Standard Specifications is amended with respect to the clauses cited below. No other clauses or requirements of this Item are waived or changed.

Section 1.1. "Buy America," and Section 1.2., "Buy America Exceptions," are voided and replaced by the following.

1.1. **Buy America**. Comply with the latest provisions of Build America, Buy America Act (BABA Act) of the Bipartisan Infrastructure Law and applicable CFR, which restrict funds being made available from Federal financial assistance programs unless all the iron products, steel products, manufactured products, and construction materials used in the project are produced in the United States. Use iron or steel products, manufactured products, or construction materials produced in the United States for all permanently installed materials and products except when defined in Section 1.1.5., "Buy America Exceptions."

A material is solely classified based on its status at the time it is brought to the work site as either an iron or steel product, construction material, manufactured product, or Section 70917(c) material. Refer to the Buy America Material Classification Sheet found at https://www.txdot.gov/business/resources/materials/buy-america-material-classification-sheet.html for additional clarification on material classification.

1.1.1. **Iron or Steel**. Iron or steel products means articles, materials, or supplies that consist of iron or steel or a combination of both. For iron or steel products, manufacturing includes any process that modifies the chemical content, physical shape or size, or final finish of a product. The manufacturing process begins with initial melting and mixing and continues through fabrication (e.g., cutting, drilling, welding, bending.) and coating (e.g., paint, galvanizing, epoxy).

For iron or steel products, submit a notarized original FORM D-9-USA-1 (Department Form 1818) with the proper attachments for verification of compliance.

1.1.2. **Section 70917(c) Materials**. Section 70917(c) materials mean cement and cementitious material; aggregates such as stone, sand, or gravel; or aggregate binding agents or additives. Section 70917(c) materials do not require domestic sourcing or Buy America certification.

1.1.3. **Construction Materials**. Construction materials are classified as articles, materials, or supplies that consist of only one of the items listed in bullets below. Minor additions (as determined by the plans or the Engineer) to any of the items listed is still a construction material.

- non-ferrous metals,
- plastic and polymer-based products (including polyvinyl chloride, composite building materials, and polymers used in fiber optic cables),
- glass (including optic glass),
- fiber optic cable (including drop cable),
- optical fiber,
- lumber,
- engineered wood, or
- drywall.

For construction materials, submit a Construction Material Buy America Certification Form (Department Form 2806) for verification of compliance that all manufacturing processes, as required, occurred in the

United States. Each construction material has specific certification requirements stated below. Provide additional documentation as requested.

Details shown on the plans provide additional clarification on Buy America requirements.

For non-ferrous metals, certification requires all manufacturing processes, from initial smelting or melting through final shaping, coating, and assembly, occurred in the United States.

For plastic and polymer-based products (including polyvinyl chloride, composite building materials, and polymers used in fiber optic cables), certification requires all manufacturing processes, from initial combination of constituent plastic or polymer-based inputs, or, where applicable, constituent composite materials, until the item is in its final form, occurred in the United States.

For glass (including optic glass), certification requires all manufacturing processes, from initial batching and melting of raw materials through annealing, cooling, and cutting, occurred in the United States.

For fiber optic cable (including drop cable), certification requires all manufacturing processes, from the initial ribboning (if applicable), through buffering, fiber stranding and jacketing, occurred in the United States. All manufacturing processes also include the standards for glass and optical fiber, but not for non-ferrous metals, plastic and polymer-based products, or any others.

For optical fiber, certification requires all manufacturing processes, from the initial preform fabrication stage through the completion of the draw, occurred in the United States.

For lumber, certification requires all manufacturing processes, from initial debarking through treatment and planing, occurred in the United States.

For engineered wood, certification requires all manufacturing processes from the initial combination of constituent materials until the wood product is in its final form, occurred in the United States.

For drywall, certification requires all manufacturing processes, from initial blending of mined or synthetic gypsum plaster and additives through cutting and drying of sandwiched panels, occurred in the United States.

1.1.4. **Manufactured Products**. Materials classified as a manufactured product are currently waived from Buy America requirements by an FHWA general waiver and are not required to be domestically sourced. However, iron or steel products incorporated into manufactured products must meet iron and steel compliance requirements.

1.1.5. **Buy America Exceptions**. Use of iron, steel, construction materials, and manufactured products manufactured in the United States is required unless the material meets an exception below.

- A waiver exists exempting the material from Buy America compliance.
- The total value of the non-compliant products (other than iron or steel products) is no more than the lesser of $1,000,000 or 5% of Total Applicable Costs for the project. Total Applicable Cost means the actual cost of all materials requiring Buy America compliance including iron, steel, or other materials that are within the scope of existing waivers. Contractor must provide documentation showing under threshold in advance for Engineer's consideration.
- The total value of foreign iron and steel products, including delivery, does not exceed 0.1% of the total Contract cost or $2,500, whichever is greater. The Contractor must provide documentation showing under threshold in advance for the Engineer's consideration.
- Foreign steel may be allowed when the Contract contains an alternate item for a foreign source iron or steel product and the Contract is awarded based on the alternate item.

- The materials are temporarily installed or are supplies, tools, and equipment not incorporated into the project. Temporarily installed means the materials and products must be removed at the end of the project or may be removed at the Contractor's convenience with the Engineer's approval.

Special Provision to Item 506

Temporary Erosion, Sedimentation, and Environmental Controls

For this project, item 506, "Temporary Erosion, Sedimentation, and Environmental Controls," of the standard specifications, is hereby voided and replaced with the following.

1. DESCRIPTION

Install, maintain, and remove erosion, sedimentation, and environmental control measures to prevent or reduce the discharge of pollutants in accordance with the Storm Water Pollution Prevention Plan (SWP3) in the plans and the Texas Pollutant Discharge Elimination System (TPDES) General Permit TXR150000.

2. MATERIALS

Furnish materials in accordance with the following:

- Item 161, "Compost"
- Item 432, "Riprap"
- Item 556, "Pipe Underdrains"

2.1. **Rock Filter Dams**.

2.1.1. **Aggregate**. Furnish aggregate with hardness, durability, cleanliness, and resistance to crumbling, flaking, and eroding acceptable to the Owner. Provide the following:

- Types 1, 2, and 4 Rock Filter Dams. Use 3 to 6 in. aggregate.
- Type 3 Rock Filter Dams. Use 4 to 8 in. aggregate.

2.1.2. **Wire**. Provide minimum 20 gauge galvanized wire for the steel wire mesh and tie wires for Types 2 and 3 rock filter dams. Type 4 dams require:

- a double-twisted, hexagonal weave with a nominal mesh opening of 2-1/2 in. × 3-1/4 in.;
- minimum 0.0866 in. steel wire for netting;
- minimum 0.1063 in. steel wire for selvages and corners; and
- minimum 0.0866 in. for binding or tie wire.

2.1.3. **Sandbag Material**. Furnish sandbags meeting Section 506.2.8., "Sandbags," except that any gradation of aggregate may be used to fill the sandbags.

2.2. **Temporary Pipe Slope Drains**. Provide corrugated metal pipe, polyvinyl chloride (PVC) pipe, flexible tubing, watertight connection bands, grommet materials, prefabricated fittings, and flared entrance sections that conform to the plans. Recycled and other materials meeting these requirements are allowed if approved.

Furnish concrete in accordance with Item 432, "Riprap."

2.3. **Temporary Paved Flumes**. Furnish asphalt concrete, hydraulic cement concrete, or other comparable non-erodible material that conforms to the plans. Provide rock or rubble with a minimum diameter of 6 in. and a maximum volume of 1/2 cu. ft. for the construction of energy dissipaters.

2.4. **Construction Exits**. Provide materials that meet the details shown on the plans and this Section.

2.4.1. **Rock Construction Exit**. Provide crushed aggregate for long- and short-term construction exits. Furnish aggregates that are clean, hard, durable, and free from adherent coatings such as salt, alkali, dirt, clay, loam, shale, soft or flaky materials, and organic and injurious matter. Use 4- to 8-in. aggregate for Type 1. Use 2- to 4-in. aggregate for Type 3.

2.4.2. **Timber Construction Exit**. Furnish No. 2 quality or better railroad ties and timbers for long-term construction exits, free of large and loose knots and treated to control rot. Fasten timbers with nuts and bolts or lag bolts, of at least 1/2 in. diameter, unless otherwise shown on the plans or allowed. Provide plywood or pressed wafer board at least 1/2 in. thick for short-term exits.

2.4.3. **Foundation Course**. Provide a foundation course consisting of flexible base, bituminous concrete, hydraulic cement concrete, or other materials as shown on the plans or directed.

2.5. **Embankment for Erosion Control**. Provide rock, loam, clay, topsoil, or other earth materials that will form a stable embankment to meet the intended use.

2.6. **Pipe**. Provide pipe outlet material in accordance with Item 556, "Pipe Underdrains," and details shown on the plans.

2.7. **Construction Perimeter Fence**.

2.7.1. **Posts**. Provide essentially straight wood or steel posts that are at least 60 in. long. Furnish soft wood posts with a minimum diameter of 3 in., or use nominal 2 × 4 in. boards. Furnish hardwood posts with a minimum cross-section of 1-1/2 × 1-1/5 in. Furnish T- or L-shaped steel posts with a minimum weight of 0.5 lb. per foot.

2.7.2. **Fence**. Provide orange construction fencing as approved.

2.7.3. **Fence Wire**. Provide 11 gauge or larger galvanized smooth or twisted wire. Provide 16 gauge or larger tie wire.

2.7.4. **Flagging**. Provide brightly-colored flagging that is fade-resistant and at least 3/4 in. wide to provide maximum visibility both day and night.

2.7.5. **Staples**. Provide staples with a crown at least 1/2 in. wide and legs at least 1/2 in. long.

2.7.6. **Used Materials**. Previously used materials meeting the applicable requirements may be used if approved.

2.8. **Sandbags**. Provide sandbag material of polypropylene, polyethylene, or polyamide woven fabric with a minimum unit weight of 4 oz. per square yard, a Mullen burst-strength exceeding 300 psi, and an ultraviolet stability exceeding 70%.

Use natural coarse sand or manufactured sand meeting the gradation given in Table 1 to fill sandbags. Filled sandbags must be 24 to 30 in. long, 16 to 18 in. wide, and 6 to 8 in. thick.

Table 1
Sand Gradation

Sieve #	Retained (% by Weight)
4	Maximum 3%
100	Minimum 80%
200	Minimum 95%

Aggregate may be used instead of sand for situations where sandbags are not adjacent to traffic. The aggregate size shall not exceed 3/8 in.

2.9. **Temporary Sediment Control Fence**. Provide a net-reinforced fence using woven geo-textile fabric. Logos visible to the traveling public will not be allowed.

2.9.1. **Fabric**. Provide fabric materials in accordance with DMS-6230, "Temporary Sediment Control Fence Fabric."

2.9.2. **Posts**. Provide essentially straight wood or steel posts with a minimum length of 48 in., unless otherwise shown on the plans. Furnish soft wood posts at least 3 in. in diameter, or use nominal 2 × 4 in. boards. Furnish hardwood posts with a minimum cross-section of 1-1/2 × 1-1/2 in. Furnish T- or L-shaped steel posts with a minimum weight of 1.3 lb. per foot.

2.9.3. **Net Reinforcement**. Provide net reinforcement of at least 12-1/2 gauge galvanized welded wire mesh, with a maximum opening size of 2 × 4 in., at least 24 in. wide, unless otherwise shown on the plans.

2.9.4. **Staples**. Provide staples with a crown at least 3/4 in. wide and legs 1/2 in. long.

2.9.5. **Used Materials**. Use recycled material meeting the applicable requirements if approved.

2.10. **Biodegradable Erosion Control Logs**.

2.10.1. **Core Material**. Furnish core material that is biodegradable or recyclable. Use compost, mulch, aspen excelsior wood fibers, chipped site vegetation, agricultural rice or wheat straw, coconut fiber, 100% recyclable fibers, or any other acceptable material unless specifically called out on the plans. Permit no more than 5% of the material to escape from the containment mesh. Furnish compost meeting the requirements of Item 161, "Compost."

2.10.2. **Containment Mesh**. Furnish containment mesh that is 100% biodegradable, photodegradable, or recyclable such as burlap, twine, UV photodegradable plastic, polyester, or any other acceptable material.

Furnish biodegradable or photodegradable containment mesh when log will remain in place as part of a vegetative system.

Furnish recyclable containment mesh for temporary installations.

2.10.3. **Size**. Furnish biodegradable erosion control logs with diameters shown on the plans or as directed. Stuff containment mesh densely so logs do not deform.

3. CONSTRUCTION

3.1. **Contractor Responsibilities**. Implement the Owner's Storm Water Pollution Prevention Plan (SWP3) for the project in accordance with the plans and specifications, TPDES General Permit TXR150000, and as directed by the Owner. Develop and implement an SWP3 for project-specific material supply plants within and outside of the Owner's right of way in accordance with the specific or general storm water permit requirements. Prevent water pollution from storm water associated with construction activity from entering any surface water or private property on or adjacent to the project site.

3.2. **General.**

3.2.1. **Phasing**. Implement control measures in the area to be disturbed before beginning construction, or as directed. Limit the disturbance to the area shown on the plans or as directed. If, in the opinion of the Owner, the Contractor cannot control soil erosion and sedimentation resulting from construction operations, the Owner will limit the disturbed area to that which the Contractor is able to control. Minimize disturbance to vegetation.

3.2.2. **Maintenance**. Immediately correct ineffective control measures. Implement additional controls as directed. Remove excavated material within the time requirements specified in the applicable storm water permit.

3.2.3. **Stabilization**. Stabilize disturbed areas where construction activities will be temporarily stopped in accordance with the applicable storm water permit. Establish a uniform vegetative cover. The project will not be accepted until a 70% density of existing adjacent undisturbed areas is obtained, unless otherwise shown on the plans. When shown on the plans, the Owner may accept the project when adequate controls are in place that will control erosion, sedimentation, and water pollution until sufficient vegetative cover can be established.

3.2.4. **Finished Work**. Upon acceptance of vegetative cover, remove and dispose of all temporary control measures, temporary embankments, bridges, matting, falsework, piling, debris, or other obstructions placed during construction that are not a part of the finished work, or as directed.

3.2.5. **Restricted Activities and Required Precautions**. Do not discharge onto the ground or surface waters any pollutants such as chemicals, raw sewage, fuels, lubricants, coolants, hydraulic fluids, bitumens, or any other petroleum product. Operate and maintain equipment on-site to prevent actual or potential water pollution. Manage, control, and dispose of litter on-site such that no adverse impacts to water quality occur. Prevent dust from creating a potential or actual unsafe condition, public nuisance, or condition endangering the value, utility, or appearance of any property. Wash out concrete trucks only as described in the TPDES General Permit TXR150000. Utilize appropriate controls to minimize the offsite transport of suspended sediments and other pollutants if it is necessary to pump or channel standing water (i.e. dewatering). Prevent discharges that would contribute to a violation of Edwards Aquifer Rules, water quality standards, the impairment of a listed water body, or other state or federal law.

3.3. **Installation, Maintenance, and Removal Work**. Perform work in accordance with the SWP3, according to manufacturers' guidelines, and in accordance with the TPDES General Permit TXR150000. Install and maintain the integrity of temporary erosion and sedimentation control devices to accumulate silt and debris until soil disturbing activities are completed and permanent erosion control features are in place or the disturbed area has been adequately stabilized as determined by the Owner. . If a device ceases to function as intended, repair or replace the device or portions thereof as necessary. Remove sediment, debris, and litter. When approved, sediments may be disposed of within embankments, or in the right of way in areas where the material will not contribute to further siltation. Dispose of removed material in accordance with federal, state, and local regulations.

Remove devices upon approval or as directed. Finish-grade and dress the area upon removal. Stabilize disturbed areas in accordance with the permit, and as shown on the plans or directed. Materials removed are considered consumed by the project. Retain ownership of stockpiled material and remove it from the project when new installations or replacements are no longer required.

3.3.1. **Rock Filter Dams for Erosion Control.** Remove trees, brush, stumps, and other objectionable material that may interfere with the construction of rock filter dams. Place sandbags as a foundation when required or at the Contractor's option.

Place the aggregate to the lines, height, and slopes specified, without undue voids for Types 1, 2, 3, and 5. Place the aggregate on the mesh and then fold the mesh at the upstream side over the aggregate and secure it to itself on the downstream side with wire ties, or hog rings for Types 2 and 3, or as directed. Place rock filter dams perpendicular to the flow of the stream or channel unless otherwise directed. Construct filter dams according to the following criteria unless otherwise shown on the plans:

3.3.1.1. **Type 1 (Non-reinforced)**.

3.3.1.1.1. **Height**. At least 18 in. measured vertically from existing ground to top of filter dam.

3.3.1.1.2. **Top Width**. At least 2 ft.

3.3.1.1.3. **Slopes**. No steeper than 2:1.

3.3.1.2. **Type 2 (Reinforced)**.

3.3.1.2.1. **Height**. At least 18 in. measured vertically from existing ground to top of filter dam.

3.3.1.2.2. **Top Width**. At least 2 ft.

3.3.1.2.3. **Slopes**. No steeper than 2:1.

3.3.1.3. **Type 3 (Reinforced)**.

3.3.1.3.1. **Height**. At least 36 in. measured vertically from existing ground to top of filter dam.

3.3.1.3.2. **Top Width**. At least 2 ft.

3.3.1.3.3. **Slopes**. No steeper than 2:1.

3.3.1.4. **Type 4 (Sack Gabions)**. Unfold sack gabions and smooth out kinks and bends. Connect the sides by lacing in a single loop–double loop pattern on 4- to 5-in. spacing for vertical filling. Pull the end lacing rod at one end until tight, wrap around the end, and twist 4 times. Fill with stone at the filling end, pull the rod tight, cut the wire with approximately 6 in. remaining, and twist wires 4 times.

Place the sack flat in a filling trough, fill with stone, connect sides, and secure ends as described above for horizontal filling.

Lift and place without damaging the gabion. Shape sack gabions to existing contours.

3.3.1.5. **Type 5**. Provide rock filter dams as shown on the plans.

3.3.2. **Temporary Pipe Slope Drains**. Install pipe with a slope as shown on the plans or as directed. Construct embankment for the drainage system in 8-in. lifts to the required elevations. Hand-tamp the soil around and under the entrance section to the top of the embankment as shown on the plans or as directed. Form the top of the embankment or earth dike over the pipe slope drain at least 1 ft. higher than the top of the inlet pipe at all points. Secure the pipe with hold-downs or hold-down grommets spaced a maximum of 10 ft. on center. Construct the energy dissipaters or sediment traps as shown on the plans or as directed. Construct the sediment trap using concrete or rubble riprap in accordance with Item 432, “Riprap,” when designated on the plans.

3.3.3. **Temporary Paved Flumes**. Construct paved flumes as shown on the plans or as directed. Provide excavation and embankment (including compaction of the subgrade) of material to the dimensions shown on the plans unless otherwise indicated. Install a rock or rubble riprap energy dissipater, constructed from the materials specified above, to a minimum depth of 9 in. at the flume outlet to the limits shown on the plans or as directed.

3.3.4. **Construction Exits**. Prevent traffic from crossing or exiting the construction site or moving directly onto a public roadway, alley, sidewalk, parking area, or other right of way areas other than at the location of construction exits when tracking conditions exist. Construct exits for either long- or short-term use.

3.3.4.1. **Long-Term**. Place the exit over a foundation course as required. Grade the foundation course or compacted subgrade to direct runoff from the construction exits to a sediment trap as shown on the plans or as directed. Construct exits with a width of at least 14 ft. for one-way and 20 ft. for two-way traffic for the full width of the exit, or as directed.

3.3.4.1.1. **Type 1**. Construct to a depth of at least 8 in. using crushed aggregate as shown on the plans or as directed.

3.3.4.1.2. **Type 2**. Construct using railroad ties and timbers as shown on the plans or as directed.

3.3.4.2. **Short-Term**.

3.3.4.2.1. **Type 3**. Construct using crushed aggregate, plywood, or wafer board. This type of exit may be used for daily operations where long-term exits are not practical.

3.3.4.2.2. **Type 4**. Construct as shown on the plans or as directed.

3.3.5. **Earthwork for Erosion Control**. Perform excavation and embankment operations to minimize erosion and to remove collected sediments from other erosion control devices.

3.3.5.1. **Excavation and Embankment for Erosion Control Features**. Place earth dikes, swales, or combinations of both along the low crown of daily lift placement, or as directed, to prevent runoff spillover. Place swales and dikes at other locations as shown on the plans or as directed to prevent runoff spillover or to divert runoff. Construct cuts with the low end blocked with undisturbed earth to prevent erosion of hillsides. Construct sediment traps at drainage structures in conjunction with other erosion control measures as shown on the plans or as directed.

Create a sediment basin, where required, providing 3,600 cu. ft. of storage per acre drained, or equivalent control measures for drainage locations that serve an area with 10 or more disturbed acres at one time, not including offsite areas.

3.3.5.2. **Excavation of Sediment and Debris**. Remove sediment and debris when accumulation affects the performance of the devices, after a rain, and when directed.

3.3.6. **Construction Perimeter Fence**. Construct, align, and locate fencing as shown on the plans or as directed.

3.3.6.1. **Installation of Posts**. Embed posts 18 in. deep or adequately anchor in rock, with a spacing of 8 to 10 ft.

3.3.6.2. **Wire Attachment**. Attach the top wire to the posts at least 3 ft. from the ground. Attach the lower wire midway between the ground and the top wire.

3.3.6.3. **Flag Attachment**. Attach flagging to both wire strands midway between each post. Use flagging at least 18 in. long. Tie flagging to the wire using a square knot.

3.3.7. **Sandbags for Erosion Control**. Construct a berm or dam of sandbags that will intercept sediment-laden storm water runoff from disturbed areas, create a retention pond, detain sediment, and release water in sheet flow. Fill each bag with sand so that at least the top 6 in. of the bag is unfilled to allow for proper tying of the open end. Place the sandbags with their tied ends in the same direction. Offset subsequent rows of sandbags 1/2 the length of the preceding row. Place a single layer of sandbags downstream as a secondary debris trap. Place additional sandbags as necessary or as directed for supplementary support to berms or dams of sandbags or earth.

3.3.8. **Temporary Sediment-Control Fence**. Provide temporary sediment-control fence near the downstream perimeter of a disturbed area to intercept sediment from sheet flow. Incorporate the fence into erosion-control measures used to control sediment in areas of higher flow. Install the fence as shown on the plans, as specified in this Section, or as directed.

3.3.8.1. **Installation of Posts**. Embed posts at least 18 in. deep, or adequately anchor, if in rock, with a spacing of 6 to 8 ft. and install on a slight angle toward the runoff source.

3.3.8.2. **Fabric Anchoring**. Dig trenches along the uphill side of the fence to anchor 6 to 8 in. of fabric. Provide a minimum trench cross-section of 6 × 6 in. Place the fabric against the side of the trench and align approximately 2 in. of fabric along the bottom in the upstream direction. Backfill the trench, then hand-tamp.

3.3.8.3. **Fabric and Net Reinforcement Attachment**. Attach the reinforcement to wooden posts with staples, or to steel posts with T-clips, in at least 4 places equally spaced unless otherwise shown on the plans. Sewn vertical pockets may be used to attach reinforcement to end posts. Fasten the fabric to the top strand of reinforcement by hog rings or cord every 15 in. or less.

3.3.8.4. **Fabric and Net Splices**. Locate splices at a fence post with a minimum lap of 6 in. attached in at least 6 places equally spaced unless otherwise shown on the plans. Do not locate splices in concentrated flow areas.

Requirements for installation of used temporary sediment-control fence include the following:

- fabric with minimal or no visible signs of biodegradation (weak fibers),
- fabric without excessive patching (more than 1 patch every 15 to 20 ft.),
- posts without bends, and
- backing without holes.

3.3.9. **Biodegradable Erosion Control Logs**. Install biodegradable erosion control logs near the downstream perimeter of a disturbed area to intercept sediment from sheet flow. Incorporate the biodegradable erosion control logs into the erosion measures used to control sediment in areas of higher flow. Install, align, and locate the biodegradable erosion control logs as specified below, as shown in plans or as directed.

Secure biodegradable erosion control logs in a method adequate to prevent displacement as a result of normal rain events, prevent damage to the logs, and to the satisfaction of the Owner such that flow is not allowed under the logs. Temporarily removing and replacing biodegradable erosion logs as to facilitate daily work is allowed at the Contractor's expense.

3.3.10. **Vertical Tracking**. Perform vertical tracking on slopes to temporarily stabilize soil. Provide equipment with a track undercarriage capable of producing a linear soil impression measuring a minimum of 12 in. long × 2 to 4 in. wide × 1/2 to 2 in. deep. Do not exceed 12 in. between track impressions. Install continuous linear track impressions where the 12 in. length impressions are perpendicular to the slope. Vertical tracking is required on projects where soil disturbing activities have occurred unless otherwise approved.

4. MEASUREMENT

4.1. **Rock Filter Dams**. Installation or removal of rock filter dams will be measured by the foot or by the cubic yard. The measured volume will include sandbags, when used.

4.1.1. **Linear Measurement**. When rock filter dams are measured by the foot, measurement will be along the centerline of the top of the dam.

4.1.2. **Volume Measurement**. When rock filter dams are measured by the cubic yard, measurement will be based on the volume of rock computed by the method of average end areas.

4.1.2.1. **Installation**. Measurement will be made in final position.

4.1.2.2. **Removal**. Measurement will be made at the point of removal.

4.2. **Temporary Pipe Slope Drains**. Temporary pipe slope drains will be measured by the foot.

4.3. **Temporary Paved Flumes**. Temporary paved flumes will be measured by the square yard of surface area. The measured area will include the energy dissipater at the flume outlet.

4.4. **Construction Exits**. Construction exits will be measured by the square yard of surface area.

4.5. **Earthwork for Erosion and Sediment Control**.

4.5.1. **Equipment and Labor Measurement**. Equipment and labor used will be measured by the actual number of hours the equipment is operated and the labor is engaged in the work.

4.5.2. **Volume Measurement**.

4.5.2.1. **In Place**.

4.5.2.1.1. **Excavation**. Excavation will be measured by the cubic yard in its original position and the volume computed by the method of average end areas.

4.5.2.1.2. **Embankment**. Embankment will be measured by the cubic yard in its final position by the method of average end areas. The volume of embankment will be determined between:

- the original ground surfaces or the surface upon that the embankment is to be constructed for the feature and
- the lines, grades and slopes of the accepted embankment for the feature.

4.5.2.2. **In Vehicles**. Excavation and embankment quantities will be combined and paid for under "Earthwork (Erosion and Sediment Control, In Vehicle)." Excavation will be measured by the cubic yard in vehicles at the point of removal. Embankment will be measured by the cubic yard in vehicles measured at the point of delivery. Shrinkage or swelling factors will not be considered in determining the calculated quantities.

4.6. **Construction Perimeter Fence**. Construction perimeter fence will be measured by the foot.

4.7. **Sandbags for Erosion Control**. Sandbags will be measured as each sandbag or by the foot along the top of sandbag berms or dams.

4.8. **Temporary Sediment-Control Fence**. Installation or removal of temporary sediment-control fence will be measured by the foot.

4.9. **Biodegradable Erosion Control Logs**. Installation or removal of biodegradable erosion control logs will be measured by the foot along the centerline of the top of the control logs.

4.10. **Vertical Tracking**. Vertical tracking will not be measured or paid for directly but is considered subsidiary to this Item.

5. PAYMENT

The following will not be paid for directly but are subsidiary to pertinent Items:

- erosion-control measures for Contractor project-specific locations (PSLs) inside and outside the right of way (such as construction and haul roads, field offices, equipment and supply areas, plants, and material sources);
- removal of litter, unless a separate pay item is shown on the plans;
- repair to devices and features damaged by Contractor operations;
- added measures and maintenance needed due to negligence, carelessness, lack of maintenance, and failure to install permanent controls;
- removal and reinstallation of devices and features needed for the convenience of the Contractor;
- finish grading and dressing upon removal of the device; and
- minor adjustments including but not limited to plumbing posts, reattaching fabric, minor grading to maintain slopes on an erosion embankment feature, or moving small numbers of sandbags.

Stabilization of disturbed areas will be paid for under pertinent Items.

Furnishing and installing pipe for outfalls associated with sediment traps and ponds will not be paid for directly but is subsidiary to the excavation and embankment under this Item.

5.1. **Rock Filter Dams**. The work performed and materials furnished in accordance with this Item and measured as provided under "Measurement" will be paid for at the unit price bid as follows:

5.1.1. **Installation**. Installation will be paid for as “Rock Filter Dams (Install)” of the type specified. This price is full compensation for furnishing and operating equipment, finish backfill and grading, lacing, proper disposal, labor, materials, tools, and incidentals.

5.1.2. **Removal**. Removal will be paid for as “Rock Filter Dams (Remove).” This price is full compensation for furnishing and operating equipment, proper disposal, labor, materials, tools, and incidentals.

When the Owner directs that the rock filter dam installation or portions thereof be replaced, payment will be made at the unit price bid for “Rock Filter Dams (Remove)” and for “Rock Filter Dams (Install)” of the type specified. This price is full compensation for furnishing and operating equipment, finish backfill and grading, lacing, proper disposal, labor, materials, tools, and incidentals.

5.2. **Temporary Pipe Slope Drains**. The work performed and materials furnished in accordance with this Item and measured as provided under “Measurement” will be paid for at the unit price bid for “Temporary Pipe Slope Drains” of the size specified. This price is full compensation for furnishing materials, removal and disposal, furnishing and operating equipment, labor, tools, and incidentals.

Removal of temporary pipe slope drains will not be paid for directly but is subsidiary to the installation Item. When the Owner directs that the pipe slope drain installation or portions thereof be replaced, payment will be made at the unit price bid for “Temporary Pipe Slope Drains” of the size specified, which is full compensation for the removal and reinstallation of the pipe drain.

Earthwork required for the pipe slope drain installation, including construction of the sediment trap, will be measured and paid for under “Earthwork for Erosion and Sediment Control.”

Riprap concrete or stone, when used as an energy dissipater or as a stabilized sediment trap, will be measured and paid for in accordance with Item 432, “Riprap.”

5.3. **Temporary Paved Flumes**. The work performed and materials furnished in accordance with this Item and measured as provided under “Measurement” will be paid for at the unit price bid for “Temporary Paved Flume (Install)” or “Temporary Paved Flume (Remove).” This price is full compensation for furnishing and placing materials, removal and disposal, equipment, labor, tools, and incidentals.

When the Owner directs that the paved flume installation or portions thereof be replaced, payment will be made at the unit prices bid for “Temporary Paved Flume (Remove)” and “Temporary Paved Flume (Install).” These prices are full compensation for the removal and replacement of the paved flume and for equipment, labor, tools, and incidentals.

Earthwork required for the paved flume installation, including construction of a sediment trap, will be measured and paid for under “Earthwork for Erosion and Sediment Control.”

5.4. **Construction Exits**. Contractor-required construction exits from off right of way locations or on-right of way PSLs will not be paid for directly but are subsidiary to pertinent Items.

The work performed and materials furnished in accordance with this Item and measured as provided under “Measurement” for construction exits needed on right of way access to work areas required by the Owner will be paid for at the unit price bid for “Construction Exits (Install)” of the type specified or “Construction Exits (Remove).” This price is full compensation for furnishing and placing materials, excavating, removal and disposal, cleaning vehicles, labor, tools, and incidentals.

When the Owner directs that a construction exit or portion thereof be removed and replaced, payment will be made at the unit prices bid for “Construction Exit (Remove)” and “Construction Exit (Install)” of the type specified. These prices are full compensation for the removal and replacement of the construction exit and for equipment, labor, tools, and incidentals.

Construction of sediment traps used in conjunction with the construction exit will be measured and paid for under "Earthwork for Erosion and Sediment Control."

5.5. **Earthwork for Erosion and Sediment Control**.

5.5.1. **Initial Earthwork for Erosion and Sediment Control**. The work performed and materials furnished in accordance with this Item and measured as provided under "Measurement" will be paid for at the unit price bid for "Excavation (Erosion and Sediment Control, In Place)," "Embankment (Erosion and Sediment Control, In Place)," "Excavation (Erosion and Sediment Control, In Vehicle)," "Embankment (Erosion and Sediment Control, (In Vehicle)," or "Earthwork (Erosion and Sediment Control, In Vehicle)."

This price is full compensation for excavation and embankment including hauling, disposal of material not used elsewhere on the project; embankments including furnishing material from approved sources and construction of erosion-control features; and equipment, labor, tools, and incidentals.

Sprinkling and rolling required by this Item will not be paid for directly, but will be subsidiary to this Item.

5.5.2. **Maintenance Earthwork for Erosion and Sediment Control for Cleaning and Restoring Control Measures**. The work performed and materials furnished in accordance with this Item and measured as provided under "Measurement" will be paid under a Contractor Force Account Item from invoice provided to the Owner.

This price is full compensation for excavation, embankment, and re-grading including removal of accumulated sediment in various erosion control installations as directed, hauling, and disposal of material not used elsewhere on the project; excavation for construction of erosion-control features; embankments including furnishing material from approved sources and construction of erosion-control features; and equipment, labor, tools, and incidentals.

Earthwork needed to remove and obliterate erosion-control features will not be paid for directly but is subsidiary to pertinent Items unless otherwise shown on the plans.

Sprinkling and rolling required by this Item will not be paid for directly, but will be subsidiary to this Item.

5.6. **Construction Perimeter Fence**. The work performed and materials furnished in accordance with this Item and measured as provided under "Measurement" will be paid for at the unit price bid for "Construction Perimeter Fence." This price is full compensation for furnishing and placing the fence; digging, fence posts, wire, and flagging; removal and disposal; and materials, equipment, labor, tools, and incidentals.

Removal of construction perimeter fence will be not be paid for directly but is subsidiary to the installation Item. When the Owner directs that the perimeter fence installation or portions thereof be removed and replaced, payment will be made at the unit price bid for "Construction Perimeter Fence," which is full compensation for the removal and reinstallation of the construction perimeter fence.

5.7. **Sandbags for Erosion Control**. Sandbags will be paid for at the unit price bid for "Sandbags for Erosion Control" (of the height specified when measurement is by the foot). This price is full compensation for materials, placing sandbags, removal and disposal, equipment, labor, tools, and incidentals.

Removal of sandbags will not be paid for directly but is subsidiary to the installation Item. When the Owner directs that the sandbag installation or portions thereof be replaced, payment will be made at the unit price bid for "Sandbags for Erosion Control," which is full compensation for the reinstallation of the sandbags.

5.8. **Temporary Sediment-Control Fence**. The work performed and materials furnished in accordance with this Item and measured as provided under "Measurement" will be paid for at the unit price bid as follows:

5.8.1. **Installation**. Installation will be paid for as “Temporary Sediment-Control Fence (Install).” This price is full compensation for furnishing and operating equipment finish backfill and grading, lacing, proper disposal, labor, materials, tools, and incidentals.

5.8.2. **Removal**. Removal will be paid for as “Temporary Sediment-Control Fence (Remove).” This price is full compensation for furnishing and operating equipment, proper disposal, labor, materials, tools, and incidentals.

5.9. **Biodegradable Erosion Control Logs**. The work performed and materials furnished in accordance with this Item and measured as provided under “Measurement” will be paid for at the unit price bid as follows:

5.9.1. **Installation**. Installation will be paid for as “Biodegradable Erosion Control Logs (Install)” of the size specified. This price is full compensation for furnishing and operating equipment finish backfill and grading, staking, proper disposal, labor, materials, tools, and incidentals.

5.9.2. **Removal**. Removal will be paid for as “Biodegradable Erosion Control Logs (Remove).” This price is full compensation for furnishing and operating equipment, proper disposal, labor, materials, tools, and incidentals.

5.10. **Vertical Tracking**. Vertical tracking will not be measured or paid for directly but is considered subsidiary to this Item.

Special Specification 3005
Spray Applied Underseal Membrane

1. DESCRIPTION

1.1. **Underseal Membrane**. Furnish a smooth and homogeneous spray-applied underseal membrane polymer-modified emulsion (EBL) in accordance with Section 300.2.4., "Emulsified Asphalt." The membrane must be applied by a spray-paver and covered immediately with a compacted mixture of aggregate, asphalt binder, and additives mixed hot in a mixing plant.

2. EQUIPMENT

2.1. **Spray Paver**. Furnish a spray paver in accordance with Item 320, "Equipment for Asphalt Concrete Pavement."

2.2. **Membrane Storage Tank and Distribution System**. Equip the spray paver with an insulated storage tank and distribution system in accordance with Item 320.

3. CONSTRUCTION METHODS

3.1. **Surface Preparation**. Remove existing raised pavement markers. Repair any damage incurred by removal as directed. Remove dirt, dust, or other harmful material before sealing. When shown on the plans, remove vegetation and blade pavement edges.

3.2. **Membrane Placement**. Uniformly apply the membrane at an application rate between 0.10 – 0.22 gal. per square yard for bonding, and 0.22 – 0.40 gal. per square yard for sealing. The Engineer may adjust the application rate, taking into consideration the existing pavement surface conditions. Spray the membrane using a metered mechanical pressure spray bar at a temperature of 140°F–180°F. Monitor the membrane application rate and adjust the rate when directed. Verify that the spray bar can apply the membrane at a uniform rate across the entire paving width. Do not let the wheels or other parts of the paving machine contact the freshly applied membrane. Apply a uniform membrane coat to all contact surfaces and all joints as shown on the plans. Do not dilute the membrane at the terminal, in the field, or at any other location before use. Prevent splattering of the membrane when placed adjacent to curb, gutter, and other structures.

3.3. **Quality Control**. Stop application if it is not uniform due to streaking, ridging, pooling, or flowing off the roadway surface. Verify equipment condition, operating procedures, application temperature, and material properties. Determine and correct the cause of non-uniform application.

The Engineer may perform independent tests to confirm contractor compliance and may require testing differences or failing results to be resolved before resuming production.

The Engineer may stop the application and require construction of test strips at the Contractor's expense if any of the following occurs:

- non-uniformity of application continues after corrective action;
- in three consecutive shots, application rate differs by more than 0.02 gal. per square yard from the rate directed; or
- any shot differs by more than 0.04 gal. per square yard from the rate directed.

The Engineer will approve the test strip location. The Engineer may require additional test strips until surface treatment application meets specification requirements.

3.4. **Membrane Sampling**. The Engineer will obtain a 1-qt. sample of the polymer-modified emulsion, for each lot of mixture produced, in accordance with Tex-500-C, Part III. The Engineer will notify the Contractor when the sampling will occur and will witness the collection of the sample. Obtain the sample at approximately the same time the mixture random sample is obtained. Label the can with the corresponding lot and sublot numbers, producer name, producer facility, grade, District, date sampled, and project information, including highway and CSJ number. The Engineer will retain these samples for 2 mo.

At least once per project, the Engineer will collect split samples of the polymer-modified emulsion. The Engineer will submit one split sample to the Materials and Tests Division to verify compliance with Item 300, and will retain the other split sample for 2 mo. The Engineer may test as often as necessary to ensure the residual of the emulsion is greater than or equal to the specification requirement in Item 300, Asphalts, Oils, and Emulsions."

4. MEASUREMENT

Unless otherwise noted on the plans, underseal membrane material will be measured by one of the following methods:

4.1. **Volume**. Underseal membrane material will be measured at the applied temperature by strapping the tank before and after road application and determining the net volume in gallons from the distributor's calibrated strap stick. The Engineer will witness all strapping operations for volume determination.

The Engineer may allow the use of a metering device to determine asphalt volume used and application rate if the device is accurate within 1.5% of the strapped volume.

4.2. **Weight**. Underseal membrane material will be measured in tons using certified scales meeting the requirements of Item 320, unless otherwise approved. The transporting truck must have a seal attached to the driving device and other openings. The Engineer may require random checking on public scales, at the Contractor's expense, to verify weight accuracy.

Upon completion or temporary suspension, any remaining membrane material will be weighed by a certified public weigher or measured by volume in a calibrated tank, and the quantity converted to tons at the measured temperature. The quantity to be measured will be the number of tons received, minus the number of tons remaining after all directed work is complete, and minus the amount used for other Items.

5. PAYMENT

The work performed and materials furnished in accordance with this Item and measured as provided under "Measurement" will be subsidiary to the unit bid price for "Bonding Course." These prices are full compensation for all materials, equipment, labor, tools, and incidentals necessary to complete the work.

Special Specification 3007
Bonding Course

1. DESCRIPTION

Construct a bonding course using a Tracking-Resistant Asphalt Interlayer (TRAIL) or a Spray Applied Underseal Membrane before the placement of a new hot-mix asphalt concrete pavement.

2. MATERIALS

Furnish asphalt materials in accordance with Article 300.2., "Materials" for one of the following two options:

2.1. **TRAIL**. Furnish asphalt material described as "tack" for typical use in the TRAIL Material Producer List. Do not dilute emulsified asphalts at the terminal, in the field, or at any other location before use, unless required in conformance with the manufacturer's recommendation for approved TRAIL products on the MPL.

2.2. **Underseal Membrane**. Furnish asphalt material meeting the requirements of Special Specification 3005, "Spray Applied Underseal Membrane." Do not dilute emulsified asphalts at the terminal, in the field, or at any other location before use.

Furnish asphalt material for applying tack coat to all miscellaneous contact surfaces when approved by the Engineer:

2.3. **Miscellaneous Tack**. Furnish CSS-1H, SS-1H, EBL, or a PG binder with a minimum high-temperature grade of PG 58 for tack coat binder in accordance with Item 300, Asphalts, Oils, and Emulsions. Specialized tack coat materials on the MPL for Tracking Resistant Asphalt Interlayer (TRAIL) will be allowed or required when shown on the plans. Do not dilute emulsified asphalts at the terminal, in the field, or at any other location before use, unless required in conformance with the manufacturer's recommendation for approved TRAIL products on the MPL.

2.4. **Sampling**. The Engineer will obtain at least one sample of the tack coat binder per project per source in accordance with Tex-500-C, Part III, and test it to verify compliance with Item 300. The Engineer will notify the Contractor when the sampling will occur and will witness the collection of the sample from the asphalt distributor immediately before use. Label the can with the corresponding lot and sublot numbers, producer, producer facility location, grade, district, date sampled, all applicable bills of lading (if available), and project information, including highway and control-section-job (CSJ) number. For emulsions, the Engineer may test as often as necessary to ensure the residual of the emulsion is greater than or equal to the specification requirement in Item 300.

3. EQUIPMENT

3.1. **TRAIL**. Provide the equipment recommended by the producer.

3.2. **Underseal Membrane**. Provide in accordance with Special Specification 3005, "Spray Applied Underseal Membrane."

4. CONSTRUCTION

4.1. **Preparation**. Clean the surface before placing the bonding course. Apply bonding course uniformly at the approved rate, unless otherwise directed. The Engineer will set the rate between 0.04 – 0.14 gal. of residual asphalt per square yard of surface area. The Engineer may adjust the application rate, taking into

consideration the existing pavement surface conditions. Prevent splattering of the bonding course when placed adjacent to curb, gutter, and structures,

Apply a thin, uniform tack coat to all miscellaneous contact surfaces of curbs, structures, and joints. Prevent splattering of the tack coat when placed adjacent to curb, gutter, and structures.

4.2. **TRAIL**. Perform the following construction methods when applying a TRAIL for a bonding course:

4.2.2. **Test Strips**. When required by the Engineer, perform a test strip of TRAIL at a location on or near the project as directed. Allow the strip to cure for a maximum of 30 min. Drive over the test strip with equipment used during laid-down construction to simulate the effect of paving equipment. There should be no evidence of tracking or picking up of the TRAIL material on the wheels of the equipment.

4.2.3. **Placement**. Uniformly apply the TRAIL material to all areas where mix will be placed, including joints, at the rate shown on the plans or as directed, within 15°F of the approved temperature, and not above the maximum allowable temperature. Unless otherwise directed, uniformly apply the TRAIL material at a minimum rate specified on the plans. The Engineer will set the application rate between 0.06 – 0.14 gal. per square yard for emulsion TRAIL and the application rate between 0.08 – 0.12 gal. per square yard for hot-applied TRAIL.

4.3. **Underseal Membrane**. Place in accordance with Special Specification 3005, “Spray Applied Underseal Membrane.”

4.3.2. **Placement**. Do not allow any loose mixture onto the prepared surface before application of the membrane. Unless otherwise directed, uniformly apply the membrane to all areas where mix will be placed, including joints, at the rate shown on the plans. Unless otherwise directed, uniformly apply the membrane at the minimum rate specified on the plans. The Engineer may adjust the application rate, taking into consideration the existing pavement surface conditions. The Engineer will set the application rate between 0.10 – 0.22 gal. per square yard for underseal membrane.

4.4. **Quality Control**. Stop application if it is not uniform due to streaking, ridging, pooling, or flowing off the roadway surface. Verify equipment condition, operating procedures, application temperature, and material properties. Determine and correct the cause of non-uniform application.

The Engineer may perform independent tests to confirm contractor compliance and may require testing differences or failing results to be resolved before resuming production.

The Engineer may stop the application and require construction of test strips at the Contractor’s expense if any of the following occurs:

- non-uniformity of application continues after corrective action;
- evidence of tracking or picking up of the TRAIL;
- in three consecutive shots, application rate differs by more than 0.02 gal. per square yard from the rate directed; or
- any shot differs by more than 0.04 gal. per square yard from the rate directed.

The Engineer will approve the test strip location. The Engineer may require additional test strips until surface treatment application meets specification requirements.

5. MEASUREMENT

5.1. **Volume**. Asphalt material, including all components, will be measured at the applied temperature by strapping the tank before and after road application. The distributor calibrated strap stick will be used for measuring the asphalt level in the distributor asphalt tank. The certified tank chart will be used to determine the beginning gallons and the final gallons in the distributor tank. The quantity to be measured for payment will be the difference between the beginning gallons and the final gallons.

5. PAYMENT

The work performed and materials furnished in accordance with this Item and measured as provided under "Measurement" will be paid for at the unit price bid for "Bonding Course." These prices are full compensation for surface preparation; furnishing, preparing, hauling, Miscellaneous Tack used for all miscellaneous contact surfaces, and placing materials; removing existing pavement markers and excess aggregate; rolling; cleaning up stockpiles; and equipment, labor, tools, and incidentals.

Special Specification 6009
ITS System Integration

1. DESCRIPTION

This Item will govern the integration of all furnished equipment and software as shown on the plans, as detailed in this Special Specification, and as directed. Furnish, install, test, and integrate all traffic management hardware and software into the Advanced Traffic Management System (ATMS) and the Department or local Traffic Management Center (TMC), as specified in the plans. The Contractor must select, install, and integrate the equipment and software as required to achieve a complete and fully operational Traffic Management System (TMS) as shown on the plans, as detailed in this Special Specification, and as directed.

2. SYSTEM EQUIPMENT AND INSTALLATION

Install, interconnect, test, integrate, and make all new equipment fully operational with system in accordance with the National Electrical Code (NEC).

Select, install, and integrate all new equipment and software as required to achieve a complete and fully operational system as shown on the plans, as detailed in this Special Specification, and as directed.

3. SYSTEM INTEGRATION

Provide an end-to-end communication system for integration into the Department or local TMCs. Equipment includes, but is not limited to proposed and existing:

- Bluetooth Detectors (when shown on the plans),
- Closed-Circuit Televisions (CCTV) equipment (when shown on the plans),
- Dynamic Message Signs (DMS) equipment (when shown on the plans),
- Highway Advisory Radios (HAR) (when shown on the plans),
- Hub Cabinets, Hub Buildings and Environmentally Controlled Underground Vaults (ECUV) (when shown on the plans),
- Lane Control Signs (LCS) equipment (when shown on the plans),
- Lane Management Systems (LMS) (when shown on the plans),
- Fiber optic cable (when shown on the plans),
- Radar Vehicle Sensing Devices (RVSD) equipment (when shown on the plans),
- Traffic Signals (when shown on the plans),
- Radar Vehicle Detection Systems (RVSD) for Traffic Signals (when shown on the plans),
- Wireless Communication Systems (when shown on the plans),
- Wrong Way Driver Detection Systems (WWD) (when shown on the plans),
- Video Imaging Vehicle Detection Systems (VIVDS) (when shown on the plans),
- Roadway Weather Information Systems (RWIS) (when shown on the plans),
- Over Height Vehicle Detection Systems (when shown on the plans),
- Low Water Crossing Systems (when shown on the plans),
- Cellular Modems (when shown on the plans), and
- Equipment not on this list but shown on the plans and General Notes.

Provide, install, and make operational a complete and functional system. Install and integrate all field, central, and communications components.

Perform work inside proposed or existing enclosures, when required, including re-routing, re-assignment, re-wiring, reconfiguration, re-switching, and re-cabling, based on the proposed configuration as shown in the plans and as detailed in the specifications. Perform all work in accordance with the plans and as necessary to achieve a fully functional and operational system, including all re-routing, terminations, connections, splicing, and re-assignments.

4. TESTING, TRAINING, DOCUMENTATION, FINAL ACCEPTANCE AND WARRANTY

All testing, training, documentation, final acceptance and warranty requirements will be in accordance with Special Specification, “Testing, Training, Documentation, Final Acceptance, and Warranty.”

5. MEASUREMENT

The complete “System Integration” item as detailed in the plans and described in the specifications will be measured as a lump sum unit.

6. PAYMENT

The work performed and materials furnished in accordance with this Item and measured as provided under “Measurement” will be paid for at the unit price bid for “ITS System Integration.” This price shall be full compensation for preparing, furnishing, and installing all materials, equipment, and incidentals necessary to provide an integrated system. Items not specifically mentioned or addressed in this specification but are necessary for a complete and operational system as described herein, shall be provided by the Contractor and will not be paid for directly, but shall be considered incidental to this Item.

Special Specification 6005

Networking Intelligent Transportation System (ITS) Communications Cable

1. DESCRIPTION

Furnish, install, and test twisted-pair cable for networking and telecommunication uses in the field environment.

2. MATERIALS

2.1. **General Requirements**. Provide new cable and connectors that are in conformance with the details shown on the plans and in the Specifications. The cable must be free of deformations, holes, splits, and splices.

ITS networking copper cables must be constructed for installation in an outdoor underground conduit environment. All cable provided for underground installation must contain the outside plant designation for outdoor usage and must be rated non-plenum.

Provide cable in compliance with the most current version of the following industry standards:

- NFPA National Electric Code (NEC),
- Rural Electrification Administration (REA) -PE-22 (7 CFR 1755.403), PE-39 (7 CFR 1755.390),
- ANSI /TIA-568-C, EIA/TIA-568-B.2-2001 (Category 5E Cable),
- EIA-232, EIA-422, EIA-485,
- TSB-36, and
- Underwriters Laboratory (UL).

Included in this Item are the ITS cable types listed in Table 1.

Table 1
Common Networking ITS Communication Cable Types

Cable Type	Nominal AWG Gauge	Application
category 5e Ethernet cable	#24 AWG	Standard 100Base-Tx, Gigabit Ethernet, up to 100 MHz bandwidth performance
category 6 Ethernet cable	#24 AWG	Gigabit Ethernet; up to 250MHz bandwidth performance
category 7 Ethernet cable	#24 AWG	10-Gigabit Ethernet, up to 600 MHz bandwidth performance. Category 7 cable is not typically utilized for ITS device applications. Category 7 cable applications include high bandwidth performance at network layer switches with 10 Gigabit connections.
serial communications cable (RS-232, RS-422, RS-485)	#22, #24 AWG	Serial port applications, low bandwidth, and small data rate transmission (<100 kb/s)
shielded twisted pair cable	#18-24 AWG	Telephone communications, below 16 MHz bandwidth performance
unshielded twisted pair (UTP) cable	#18-24 AWG	

Included in this Item are all terminating connectors and associated equipment required for installation and testing in a field environment.

Provide cable conforming to the gauge, type, and length shown on the plans. Ensure the cable gauge supplied meets the bandwidth requirements specific to the cable application and run length.

Provide signal amplification or repeater locations for communications cable runs as shown on the plans and in the Specifications.

When selecting serial communications cable for longer cable runs, verify the conductor gauge to be provided will meet signal loss requirements for cable application. Refer to Table 2 for typical cable distance limitations for ITS serial communications cable.

Table 2
Typical Network Communications Cable
Distance Limitations

Cable Type	Recommended Maximum Cable Run[1]
RS-232	50 ft.
RS-422 (4 wire system)	500 ft.
RS-485 (2 wire system)	500 ft.
category 5e	300 ft.
category 6	300 ft.

1. Cable distance limitation to be verified according to manufacturer for the cable application.

All cable provided must be manufactured with permanent markings at approximate 2-ft. intervals on the outer jacket according to manufacturer name, serial number, type, UL list and classification for identification purposes. All pairs must be color coded using standard North American communication industry colors to uniquely identify each pair in the cable.

2.2. **Physical Requirements**. Provide networking communications cable meeting the following physical requirements.

2.2.1. **Conductor**. All networking cable must be constructed of solid bare copper conductor.

2.2.2. **Insulation**. All networking cable must be of foamed, cellular dielectric construction. Dielectric material must adhere to and support the center cable conductor.

2.2.2.1. **Insulation Material**. Serial communications cable insulation must be high-density polyethylene (HDPE) or equivalent. Ethernet networking cable insulation must be polyolefin or HDPE. UTP cable insulation must be polyethylene, polyolefin, polypropylene, or fluorinated ethylene propylene.

2.2.3. **Shielding**. Serial communications cable shielding must contain combination foil-polyester and copper braid shield to reduce EMI interference. Ethernet networking cable must contain a combination foil-polyester shield.

2.2.3.1. **Coverage**. Serial communications cable must be constructed of 100% effective foil coverage, minimum 65% braided coverage. Ethernet networking cable (category 5e, 6, 7) must contain 100% effective foil cover.

2.2.4. **Outer Jacket**. Outer jacket must be rated for heavy duty ultraviolet (UV) exposure, sunlight, oil, and weather resistance necessary for outdoor installation.

2.2.4.1. **Jacket Material**. All networking cable outer jackets must be of PVC or polyethylene construction.

2.2.5. **Connectors**. Connectors must be matching, weather resistant, water and moisture proof, and outdoor-rated hardware that meet cable operating voltage, temperature, and impedance characteristics. Connectors must prevent the entry and collection of moisture to the cable and electrical connection point. Provide cable sealant during installation to seal connections from moisture and corrosion.

2.3. **Electrical and Mechanical Requirements**. Ethernet networking cable as shown on the plans must be in accordance with the TIA/EIA-568-C standard, and according to performance characteristics defined in TIA/EIA-568-C.4-1. All Ethernet networking cable provided must meet IEEE 802.3af and IEEE 802.3at for Power over Ethernet (PoE) applications.

Serial communications cable and UTP must conform to the following requirements:

2.3.1. **Capacitance**. Serial communications cable capacitance must not exceed 35 picofarads (pF) per foot of cable. UTP cable capacitance must not exceed 15 pF per foot of cable.

2.3.2. **Inductance**. Serial communications cable inductance must not exceed 0.30 microhenry's (μH) per foot of cable.

2.3.3. **Impedance**. Provide 100-ohm nominal impedance for UTP cables and according to the manufacturer recommendation for cable application.

2.3.4. **Attenuation**. Attenuation of the cable must be compliant with requirements of the proposed application.

2.3.5. **Resistance**. The DC resistance of the serial communications cable inner conductor must not exceed 20 ohms per 1000 ft.

2.4. **Environmental Design Requirements**.

2.4.1. **Installation Temperature Rating**. Cable must be rated for an outside ambient temperature range of -20°F to 165°F.

2.4.2. **Storage Temperature Rating**. Cable must be rated for a storage temperature range of -40°F to 165°F.

3. CONSTRUCTION METHODS

3.1. **General**. Cable must be installed in accordance with the following industry procedures:

- ANSI/TIA -568-C,
- BICSI Telecommunications Distribution Methods Manual (TDMM) and Information Transport Systems Installation (ITSIM),
- NFPA National Electric Code (NEC),
- USDA Construction of Direct Buried Plant, and
- ICEA Standard for Aerial Service Wire - ANSI/ICEA 5-89-648.

3.1.1. **Cable Storage**. All uninstalled cable must be stored according to manufacturer recommended bend radius and cable reel requirements.

3.1.2. **Cable Labeling**. All cable must be labeled using pre-laminated labels with UV protection according to usage at all terminations. Provide weatherproof labels rated for outdoor use.

3.1.3. **Installation Procedure**. All cable must be inspected and tested for continuity when received, with results compared with factory pre-shipping tests. Inspect the cable nomenclature to make certain that the correct product has been received. Notify the supplier (or manufacturer) of all discrepancies for immediate correction.

Install the network cable routed as shown on the plans and follow the manufacturer recommendations for installation.

Ensure that all exposed cable ends are covered and protected against moisture and dust penetration at all times during installation. Protect cable ends during storage, cable pulls, and post-installation.

3.1.4. **Conduit Fill Requirements**. Install cable as shown on the plans and ensure that NEC and TIA/EIA fill requirements must be met for all cable runs.

3.1.5. **Cable Slack Requirements**. Provide 25 ft. cable slack maximum in pull boxes and per manufacturer requirements.

3.1.6. **Spacing Requirements**. Provide minimum 12-in. spacing between electrical power cable and communications cable types as described for underground installations within NEC Sections 840.44 and 840.47.

3.2. **Testing**. Procedures for the tests noted below are to be in accordance with industry standard practice and recorded in accordance with ANSI/TIA/EIA rules for documentation for the cable type. Perform tests in accordance with testing requirements in this Item. For all tests, provide test forms to be used that compare measured results with threshold values. The following tests must be performed, recorded, and submitted to verify the cable performance and installation:

3.2.1. **Cable Continuity**. Perform cable continuity test for center conductor and shield continuity and record results. The test must be performed on received cable reels to identify any discrepancies and upon final installed cable interconnections. Test continuity of each pair to show a resistance of not more than 8 ohms per 1000 ft. of conductor. Use meter with a minimum input resistance measurement to be in accordance with RUS 7 CFR 1755.403 Copper Cable Telecommunications Plant Measurements.

3.2.2. **Time Domain Reflectometry (TDR)**. Perform TDR test for impedance continuity per manufacturer recommendations in coaxial cable interconnections and record results.

3.2.3. **Ground Resistance**. Use a Megohmmeter to perform ground resistance testing of all conductors including the shield, and conductor-to-conductor, including all individual conductors to the shield. Ensure that all conductor tests, including the shield, read infinity to ground, and from conductor to conductor and all individual conductors to the shield, read infinity. Replace cable not meeting the infinity test result at no expense to the department, whether one or multiple readings per cable are defective.

3.2.4. **Visual Inspection**. Where cable installation is visible, perform visual inspection (with a Department representative) to verify any evidence of the following:

- cable damage (cracks, shield damage, kinks, knots, jacket damage, crushed cable),
- bend radius violations (at conduit fittings, cabinet locations), and
- cable crimping method—use of manufacturers specified cable crimp tool only (use of pliers not permitted).

3.3. **Documentation**. Submit three copies of the following materials for each cable type provided for approval prior item supply:

- manufacturer cutsheets and complete specifications (physical, electrical, mechanical, and environmental),
- manufacturer warranty information,
- independent test lab certification, and
- blank test forms.

Submit three copies of the following materials for each cable run provided for approval post installation:

- test results,
  - completed test forms,

  - cable continuity test,
  - TDR test,
- "As-built" documentation for cable path as shown on the plans,
- complete maintenance and trouble-shooting procedures, and
- furnish additional information as shown on the plans.

3.4. **Warranty**. Warrant all cable against defects or failure in design, materials, and workmanship in conformance with the manufacturer's standard warranty.

Supply cable with no less than 95% of the manufacturer's warranty remaining on the date that equipment invoices are submitted for final payment. Any material with less than 95% warranty remaining will be rejected.

Warrant all cable furnished and installed to perform in conformance with the manufacturer published specifications for a period of 1 yr. after final acceptance of the project by the Department. Provide for "on-site" repair or replacement within two working days and at no cost to the Department. Repair or replace any defective cable, at the manufacturer's option, at no cost to the Department.

Special Specification 6008

Radar Vehicle Detection System for Signalized Intersection Control

1. DESCRIPTION

Furnish, install, relocate, or remove radar vehicle detection systems (RVDS) of the specified devices at signalized intersections to provide the required zones of detection as shown on the plans, or as directed.

2. MATERIALS

2.1. **General**. Except as allowed for relocation of RVDS equipment, ensure all equipment and component parts are new in accordance with Division Specification TO-8000, "Radar Vehicle Detection System," Section 1.0–Section 6.0, and in an operable condition at time of delivery and installation.

The Traffic Safety Division, Traffic Management Section, (TRF-TM) updates TxDOT Material producer list (MPL) of all RVDSs conforming to this Specification. New materials appearing on the MPL require no further sampling and testing before use unless deemed necessary by the Engineer or TRF-TM. Provide prequalified RVDSs from the TxDOT MPL.

Ensure all RVDSs serving the same detection purpose within the project are from the same manufacturer. RVDS devices are classified by their functional requirements. The functional requirements are for radar presence detection devices (RPDDs) and radar advance detection devices (RADDs). The RVDS system classifications are RVDS (RPDD Only), RVDS (RADD Only), and RVDS (RPDD and RADD).

Provide each RVDS sensor with a mounting bracket designed to mount directly to a pole, mast arm, or other structure. Ensure bracket is designed such that the sensor can be tilted vertically and horizontally for alignment and then locked into place after proper alignment is achieved. All hardware must be designed to support the load of the RVDS sensor and mounting bracket.

2.2. **Configuration**. Ensure the RVDS provides vehicle detection as required on the plans, or as directed.

Ensure the RVDS does not require tuning or recalibration to maintain performance once initial calibration and configuration are complete. RVDS must not require cleaning or adjustment to maintain performance.

RVDS must self-recover from power failure once power is restored.

2.3. **Cabling**. Provide appropriate length of all cables necessary to make the RVDS fully operational at each installation site.

2.4. **Software**. Ensure the RVDS manufacturer includes all software required to configure and monitor operation of RVDS field equipment locally and remotely. RVDS software must be a stable production release.

Software must allow the user to configure, operate, exercise, diagnose, and read status of all RVDS features and functions using a laptop computer.

Software must include the ability to save a local copy of RVDS field device configurations and load saved configurations to RVDS field devices.

Ensure all licenses required for operation and use of software are included at no additional cost.

Software updates must be provided at no additional cost during the warranty period.

2.5. **Electrical**. All conductors supplying the equipment must meet NEC requirements.

Ensure equipment is designed to protect personnel from exposure to high voltage during installation, operation, and maintenance.

2.6. **Mechanical**. Ensure that all parts are fabricated from corrosion-resistant materials, such as plastic, stainless steel, aluminum, or brass.

Ensure that all screws, nuts, and locking washers are corrosion-resistant. Do not use self-tapping screws.

Ensure equipment is clearly and permanently marked with manufacturer name or trademark, part number, date of manufacture, and serial number.

Ensure RVDS is modular in design for ease of field replacement and maintenance. Provide a sensor that will minimize weight and wind loading when mounted on a traffic signal pole or mast arm.

All printed circuit boards must have conformal coating.

2.7. **Environmental**. RVDS sensor must be able to withstand the maximum wind load based on the Department's basic wind velocity zone map standard without any damage or loosening from structure.

The RVDS enclosure must conform to criteria set forth in NEMA 250 for Type 4X enclosures.

The RVDS must meet all NEMA TS2 environmental requirements for temperature, humidity, transients, vibration, and shock.

2.8. **Connectors and Harnesses**. Ensure all conductors are properly color-coded and identified.

Ensure cable connector design prohibits improper connections. Cable connector pins are plated to improve conductivity and resist corrosion.

Connections for data and power must be made to the RVDS sensor using waterproof, quick-disconnect connectors. Pigtails from the sensor to a waterproof junction box (NEMA 4) or an approved waterproof connector must be allowed for splicing. The pigtails must not be shorter than 3 ft. unless otherwise shown on the plans.

3. CONSTRUCTION

3.1. **System Installation**. Install RVDS system devices according to the manufacturer's recommendations to provide properly functioning detection as required. This must include the installation of sensors on signal poles or mast arms, controller interface modules, power and surge protection panels, cabling and all associated equipment, software, serial and Ethernet communication ports, and connectors and hardware required to set up and operate. Ensure that the supplier of the RVDS provides competent onsite support representative during installation to supervise installation and testing of the RVDS. Ensure the radar sensor locations are optimal for system operation and operate as required. Maintain safe construction practices during equipment installation.

Ensure installation and configuration of software on Department computers are included with the RVDS.

Take care to prevent damage to any support structures. Any equipment or structure damaged or lost must be replaced by the Contractor (with items approved) at no cost to the Department.

3.2. **Mechanical Components**. Ensure that all fasteners, including bolts, nuts, and washers with a diameter less than 5/8 in. are Type 316 or Type 304 stainless steel and meet ASTM F593 and ASTM F594 for corrosion

resistance. Ensure that all bolts and nuts 5/8 in. and more in diameter are galvanized and meet ASTM A307. Separate dissimilar metals with an inert dielectric material.

3.3. **Wiring**. Install all wiring and electrical work supplying power to the equipment in a neat, skillful manner. Supply and install all wiring necessary to interconnect RVDS sensors to the traffic signal cabinet to complete the work. Furnish and install any additional required wiring at no additional cost to the Department.

Wiring must be cut to proper length before installation. Provide cable slack for ease of removal and replacement. All cable slack must be neatly laced with lacing or straps in the bottom of the cabinet. Ensure cables are secured with clamps.

3.4. **Grounding**. Ensure all RVDS components, cabinets, and supports are grounded in accordance with the NEC and manufacturer recommendations.

3.5. **Relocation of RVDS Field Equipment**. Perform the relocation in strict conformance with the requirements herein and as shown on the plans. Completion of the work must present a neat, skillful, and finished appearance. Maintain safe construction practices during relocation.

Inspect the existing RVDS field equipment with a representative from the Department and document any evidence of damage before removal. Conduct a pre-removal test in accordance with the testing requirements contained in this Specification to document operational functionality. Remove and deliver equipment that fails inspection to the Department.

Before removal of existing RVDS field equipment, disconnect and isolate the power cables from the electric power supply and disconnect all communication cabling from the equipment located inside the cabinet. Coil and store power and communication cabling inside the cabinet until relocation. Remove existing RVDS field equipment as shown on the plans only when authorized.

Take care to prevent damage to any support structures. Any equipment or structure damaged or lost must be replaced by the Contractor (with items approved) at no cost to the Department.

Make all arrangements for connection to the power supply and communication source, including any permits required for the work under the Contract. Provide wire for the power connection at least the minimum size indicated on the plans and insulated for 600 V. Meet the NEC.

3.6. **Removal of RVDS Field Equipment**. Perform the removal in strict conformance with the requirements herein and as shown on the plans. Completion of the work must present a neat, skillful, and finished appearance. Maintain safe construction practices during removal.

Disconnect and isolate any existing electrical supply before removal of existing field equipment.

Take care to prevent damage to any support structures. Any equipment or structure damaged or lost must be replaced by the Contractor (with items approved) at no cost to the Department.

All materials not designated for reuse or retention by the Department will become the property of the Contractor and be removed from the project site at the Contractor's expense. Deliver items to be retained by the Department to a location shown on the plans or General Notes. The Contractor is fully responsible for any removed equipment until released.

3.7. **Documentation**. Provide electronic copies of operation and maintenance manuals, along with a copy of all product documentation on electronic media. Include the following documentation.

- Complete and accurate schematic diagrams
- Complete installation procedures
- Manufacturer's specifications (functional, electrical, mechanical, and environmental)
- Complete maintenance and troubleshooting procedures

- Explanation of product operation
- Warranty as specified in Section 3.8., “Warranty”

The RVDS must pass testing to ensure functionality and reliability before delivery. This includes functional tests for internal subassemblies, a 24-hr. minimum unit level burn-in test, and a unit functionality test. Provide test results and supporting documentation, including serial number tested, for each RVDS. If requested, manufacturing data per serial number must be provided for each RVDS.

Unless deemed unnecessary by the Engineer or TRF-TM, provide certification from an independent laboratory demonstrating compliance with NEMA TS2 environmental requirements for temperature, humidity, transients, vibration, and shock.

Unless deemed unnecessary by the Engineer or TRF-TM, provide third-party enclosure test results demonstrating the sensor enclosure meets Type 4X criteria.

Unless deemed unnecessary by the Engineer or TRF-TM, provide evidence of RVDS manufacturer’s quality assurance program, including proof of RVDS manufacturer ISO 9001 certification or other quality management system programs for manufacturing RVDS.

3.8. **Warranty**. Ensure that the detection system has a manufacturer’s warranty covering defects for at least 5 yr. from the date of final acceptance. In addition to the terms required by TO-8000, Article 8, ensure the warranty includes providing replacements, within 10 calendar days of notification, for defective parts and equipment during the warranty period at no cost to the Department.

3.9. **Training and Support**. Provide manufacturer-approved end user training to the Department and their representatives. Training must include instruction in system configuration, operation, and maintenance. Provide training for at least 10 Department-designated representatives up to 8 hr., including class and field training.

Ensure that the detection system manufacturer will provide product support for at least 5 yr. from the date of final acceptance.

4. TESTING

Perform the following tests on equipment and systems unless otherwise shown on the plans. The Department may witness all the tests.

4.1. **Stand-Alone Test**. Conduct a stand-alone test for each unit after installation. The test must exercise all stand-alone (non-network) functional operations and verify that RVDS is placing detector contact closure to assigned detector channels in the traffic signal controller assembly. Notify the Engineer 5 working days before conducting this test.

4.2. **Consequences of Test Failure**. If a unit fails a test, provide a new unit, and then repeat the test until successfully completed.

4.3. **Final Acceptance Test**. Conduct a final acceptance test on the complete functional system. Demonstrate all control, monitoring, and communication requirements and operate the system for 30 days. The Engineer will furnish a letter of approval stating the first day of the final acceptance test.

4.4. **Consequences of Final Acceptance Test Failure**. If a defect within the system is detected during the final acceptance test, document and correct the source of failure. Once corrective measures are taken, monitor the point of failure until a consecutive 30-day period free of defects is achieved.

4.5. **Relocation**.

4.5.1. **Pre-Test**. Provide five copies of the test procedures, including tests of the basic functionality of the unit, and blank data forms to the Engineer for review and comment as part of material documentation requirements. Functionality tests may include, but not be limited to, physical inspection of the unit and cable assemblies. Include the sequence of the tests in the procedures along with acceptance thresholds. The Engineer will comment on and approve or reject test procedures within 30 days after Contractor submittal of test procedures. Rejected test procedures must be resubmitted within 10 days. Review time is in calendar days. Conduct all tests in accordance with the approved test procedures.

Conduct basic functionality testing before removal of RVDS field equipment. Test all functional operations of the equipment in the presence of representatives of the Contractor and the Department. Ensure that both representatives sign the test report indicating that the equipment has passed or failed each function. Once removed, the equipment will become the responsibility of the Contractor until accepted by the Department. Compare test data prior to removal and after installation. The performance test results after relocation must be equal to or better than the test results before removal. Repair or replace the failing components within the systemso that the system can pass the performance test after relocation.

4.5.2. **Post-Test**. Testing of the RVDS field equipment is to relieve the Contractor of system maintenance. The Contractor will be relieved of the responsibility for system maintenance in accordance with Item 7, “Legal Relations and Responsibilities,” after a successful test period. The Contractor will not be required to pay for electrical energy consumed by the system.

After all existing RVDS field equipment has been installed, conduct approved continuity, stand-alone, and performance tests. Furnish test data forms containing the sequence of tests, including all the data taken as well as quantitative results for all tests. Submit the test data forms to the Engineer at least 30 days before the day the tests are to begin. Obtain approval of test procedures before submission of equipment for tests. Send at least one copy of the data forms to the Engineer.

Conduct an approved stand-alone test of the equipment installation at the field sites. At minimum, exercise all stand-alone (non-network) functional operations of the field equipment with all the equipment installed per the plans as directed. Complete the approved data forms with test results and submit them to the Engineer for review and either acceptance or rejection of equipment. Give at least 30 working days’ notice before all tests to allow the Engineer or their representative to observe each test.

The Department must conduct approved RVDS field equipment system tests on the field equipment with the central equipment. The tests must, at minimum, exercise all remote-control functions and display the return status codes from the controller.

If any unit fails to pass a test, prepare and deliver a report to the Engineer. Describe the nature of the failure and the corrective action needed. If the failure is the result of improper installation or damage during reinstallation, reinstall or replace the unit and repeat the test until the unit passes successfully, at no additional cost to the Department or extension of the Contract period.

Special Specification 6014
Intelligent Transportation System (ITS) Radio

1. DESCRIPTION

Furnish, install, remove, or relocate an Intelligent Transportation System (ITS) radio at locations shown on the plans, or as directed.

2. MATERIALS

Provide new materials that are in accordance with the details shown on the plans and the requirements of this Item. Supply all equipment and hardware needed for a complete functioning system. Materials for equipment to be relocated will be “as-is.” The Contractor will protect the existing equipment from further wear or damage.

3. EQUIPMENT

3.1. **General**. The ITS radio consists of a radio, power supply, antenna, antenna cables, lightning protection, grounding, all necessary mounting hardware, and radio configuration software.

Utilize the latest industry practiced techniques in equipment design and construction of parts, subassemblies, circuits, cards, and modules. Design equipment for ease of maintenance. Ensure that all component parts are readily accessible for inspection and maintenance, using hand tools. Provide test points for checking essential voltages, waveforms, signals, and similar data.

Ensure that all external screws, nuts, and locking washers are made of corrosion resistant material. Do not use self-tapping screws unless specifically approved.

Provide parts made of corrosion resistant material such as plastic, stainless steel, anodized aluminum, or brass.

Protect all materials used in construction from fungus growth and moisture deterioration.

Separate dissimilar metals by an inert dielectric material.

3.2. **Radio**. Each radio will be a point-to-point or point-to-multi-point single-band or dual-band radio operating in the license-free frequency as shown on the plans or as directed. Provide a radio that meets all the following minimums:

3.2.1. **Frequency**. FCC unlicensed, 900 MHz, 2.4 GHz, or 5 GHz, as specified on the plans, or as directed.

3.2.2. **Channel Selection**. Dynamic Frequency Selection, with a manual override option.

3.2.3. **Minimum Range**. 15 mi., line of sight.

3.2.4. **Transmit Power**. User selectable, up to the maximum allowed by FCC rules, to at least 21 dBm, in 1 dBm steps (maximum step size). Maximum output power limited by FCC Part 15 rules for unlicensed frequencies.

3.2.5. **Receive Sensitivity**. Adaptive.

3.2.6. **Modulation**. Adaptive modulation and space diversity to provide maximum throughput.

3.2.7. **Forward Error Correction**. Provide forward error correction.

3.2.8. **Security**. Minimum security for the point-to-point backhaul network is the Advanced Encryption Standard, 128 bit block size (AES-128). Meet ISO/IEC 18033-3 standards. Minimum security for communications with Wi-Fi units is WPA2.

3.2.9. **Throughput**. Minimum out-of-the-box throughput of 100 Mbps for frequencies between 2.4 and 5 GHz. Minimum out-of-the-box throughput of 1 Mbps for the 900 Mhz frequency. Minimum measured throughput in the field of 50 Mbps for frequencies between 2.4 and 5 GHz.

3.2.10. **Networking Standards**. Provide at least the following:

- IEEE 802.1d—Ethernet Bridging,
- IEEE 802.1p—Traffic Prioritization,
- IEEE 802.1q—Virtual Local Area Network (VLAN),
- IEEE 802.3—2012 Ethernet, and
- IEEE 802.11-2009—Wi-Fi (a/b/g/n) or most current version.

3.2.11. **Network Interface**. Minimum of one functional 10/100 Base-T RJ-45 port.

3.2.12. **On-Board Alignment Tools**. Provide a radio with on-board alignment tools for use aligning the antenna. These could be external LED indicators, audible indicators, or other approved mechanism; and

3.2.13. **FCC Certification**. Provide at least the following:

- FCC Part 15.400 (U-NII);
- FCC Part 15.247 (ISM) 20 Mbps; and
- FCC Part 15, Class B.

3.3. **Power**. Provide ITS radios meeting all specified requirements when the input power is 115 VAC ± 20%, 60 Hz ± 3 Hz, and that maximum power required does not exceed 35 W, including optional equipment.

Provide appropriate voltage conversion, power injectors, or other power supply hardware if the radio equipment or any radio-related ancillary devices require operating voltages other than 115 VAC or rely on Power over Ethernet (PoE or PoE+). Appropriate voltage converters or injectors must accept an input voltage of 115 VAC as noted above. Provide any required Power over Ethernet (PoE or PoE+) devices that are 802.3af-2003 or 802.3at-2009 compliant, meeting the power requirements of the radio equipment.

The Contractor must verify with the local power service provider to ensure that the provided equipment is compatible with the installed equipment. The Contractor must supply and install any additional equipment required for proper operation of the Radio System per the design.

Every numbered table and figure must be referenced in the accompanying text. Tables and figures should appear in the order they are referred to, no matter how fleeting the reference.

3.4. **Antennas**. Furnish and install radio antennas of the number and type specified on the plans, or as directed. These may include, but are not limited to:

- connectorized omni,
- yagi,
- sectorized (i.e. 45, 60, 90, 120 etc. degree increments),
- parabolic antennas, and
- integrated flat panel antennas.

Meet the following specifications:

- antenna gain as specified in the plans,

- minimum wind rating of 110 mph,
- voltage standing wave ratio (VSWR) value not exceeding 1.5 for the radio frequency specified on the plans,
- reflection coefficient value not exceeding 0.20,
- reflected power value not exceeding 4%, and
- impedance matched to the impedance of the system so that voltage is in phase with the current (typically 50 ohms).

3.5. **Antenna Coaxial Cables**.

3.5.1. **Nominal impedance**. Matched to the antenna's impedance to minimize the voltage standing wave ratio (VSWR), typically 50 ohms.

3.5.2. **Maximum Attenuation**. 5 dB/100 ft. at the frequency specified on the plans.

3.5.3. **Maximum Cable Length.** 10 ft. maximum length from radio to antenna when radio is mounted on an external structure. 100 ft. maximum length from radio to antenna when radio is mounted in the cabinet and the antenna is mounted on the structure. Select external cable so that maximum cable attenuation is less than 5 dB total.

3.6. **Network Cable**. Provide Cat 5e shielded wire that meets the following minimum requirements:

- shielded twisted pair with drain wire,
- AWG24 solid bare copper,
- CMX outdoor rated for direct bury,
- outdoor UV rated jacket, and
- TIA/EIA-568B.2 and ISO/IEC 11801 standards.

Maximum run length for Cat 5e cable is 250 ft., or per the manufacturer's specifications.

3.7. **Lightning Protection**. Furnish and install surge protection on all coaxial cables mounted adjacent to and bonded to the cabinet ground bus. Include all mounting hardware necessary.

3.8. **Power Service Protection**. Provide equipment with readily accessible circuit protection devices (i.e. circuit breakers or fuses) for equipment and power source protection. Circuit protection devices may be resettable or replaceable.

Provide circuit breakers or fuses sized such that no wire, component, connector, PC board, or assembly will be subjected to sustained current in excess of their respective design limits upon the failure of any single circuit element of wiring.

Provide UL Listed Type 1 or Type 2 Surge Protection Device (SPD) and labeled to UL1449 Third Edition, posted at UL.com, under Certifications UL Category Code VZCA, and have a 20kA I-nominal rating. Provide SPD rated as NEMA 4. Provide an SPD with integral EMI/RFI line filtering if shown on the plans.

Provide automatic recovery from power failure within 30 sec. after resumption of power.

Provide a GFCI duplex outlet for ITS radio equipment at existing locations as shown on the plans. Provide this outlet in addition to the existing outlets within the cabinet.

3.9. **Maximum Weight**. Provide equipment with a weight not exceeding 25 lbs.

3.10. **Maximum Dimensions**.

3.10.1. **Outdoor Units**. 16 in. × 16 in. × 9 in. for integrated units, not including antenna.

3.10.2. **Used in Cabinets**. Provide equipment that easily fits on a single shelf without cabinet modifications.

3.11. **Modular Design**. Provide a modular ITS radio System design to allow components to be readily replaced in the field.

Label with UV resistant methods to identify all modules and assemblies with name, model number, serial number and any other pertinent information required to facilitate equipment maintenance.

3.12. **Network Topologies**. Point-to-Point or Point-to-Multi-Point, as shown on the plans, or as directed.

3.13. **Connectors and Harnesses**. All external connections must be made of connectors that are keyed uniquely to preclude improper hookups. Color code and label all cables to and from the connectors on both ends.

Provide connecting harnesses of appropriate length and terminated with matching connectors for interconnection with the communications system equipment.

Plate all pins and mating connectors with a minimum of 20 microns of metallic native element gold (Au). Use heat shrink tubing for all solder type connections to ensure that it protects the connection from short circuiting.

Label with UV resistant methods to identify all assemblies with name, model number, serial number, and any other pertinent information required to facilitate equipment maintenance.

Provide external waterproof connections that conform to IEC 60529 Section 14.2.7, or latest revision, for IP 66 or greater rating.

3.14. **Mechanical Requirements**. Provide equipment that is modular in design such that it can be easily replaced in the field.

Label with UV resistant methods to identify each unit with name, model number, serial number, and any other pertinent information required to facilitate equipment maintenance.

Coat all printed circuit boards with a clear-coat moisture and fungus resistant material (conformal coating).

3.15. **Environmental Requirements**. Ensure that equipment is in accordance with NEMA TS2-2003 (R2008), International Electrotechnical Commission (IEC) 60529, and NEMA 250-2008, or most current version, for the following categories:

3.15.1. **Temperature and Humidity**. Provide equipment that is in accordance with NEMA TS2 Section 2.1.5.1., or latest revision, and meets all the specified requirements during and after being subjected to any combination of the following conditions:

- ambient temperature range of -30 to 165°F,
- temperature shock not exceeding 30°F per hour,
- relative humidity of 0% to 100%, and
- moisture condensation on all exterior surfaces caused by temperature changes.

3.15.2. **Vibration**. Provide equipment that is in accordance with NEMA TS2 Section 2.1.9. and Section 2.2.3., or most current version, and meets all the specified requirements during and after being subjected to a vibration of 5 Hz to 30 Hz up to 0.5 g applied in each of three mutually perpendicular planes for 30 min.

3.15.3. **Shock**. Provide equipment that is in accordance with NEMA TS2 Section 2.1.10. and Section 2.2.4., or latest revision, and does not yield permanent mechanical deformation or any damage that renders the unit inoperable when subjected to a shock of 10g applied in each of three mutually perpendicular planes for 30 min.

3.15.4. **Environmental Contaminants**. Provide equipment that is in accordance with IEC 60529 Section 14.2.6., or latest revision, for IP 66 or greater rating when providing a pressurized unit.

Provide equipment that in accordance with IEC 60529 Section 14.2.7., or latest revision, for IP 66 or greater rating when providing a non-pressurized unit.

3.15.5. **External Icing**. Provide equipment that is tested in accordance with NEMA 250-2003 Section 5.6., or latest revision.

3.15.6. **Corrosion**. Provide equipment that is tested in accordance with NEMA 250-2003 Section 5.10., or latest revision, when located in coastal Districts. Coastal Districts are Beaumont (BMT), Corpus Christi (CRP), Houston (HOU), Pharr (PHR), and Yoakum (YKM).

3.16. **Radio Configuration and Management Software**. Provide any and all programming and software required to make operational and support the radio system. The programming and software will be installed in the appropriate equipment at the time of acceptance testing and will be used in the acceptance testing. Provide operations manuals, installation requirements, and licenses. Provide software with at least the following features.

3.16.1. **Radio Configuration**. Configuration is achieved through the following:

- a comprehensive configuration menu allowing the user to control all programmable radio settings;
- a network tree which automatically discovers, organizes, displays, and searches for a radio; and
- the ability to save individual radio configurations in a file that can be used to program replacement radios.

3.16.2. **Diagnostic Routines**. Provide the following diagnostic routines:

3.16.2.1. **Bandwidth Test**. For all communication links to a specific radio, including transmit and receive characteristics at the remote radios. Display signal strengths for transmit and receive. Provide client connection quality (CCQ).

3.16.2.2. **Spectrum Scan**. Determine the amount of background signal noise present for the specified frequency. Detect specific channels which experience interference to the extent that they are not adequate for the transmission or receipt of data. Include an option to exclude these frequencies from use.

3.16.2.3. **Ping Test**. Measure and display the time it takes a packet of data to travel to and from another device in milliseconds and percent packet loss. Measure and display the variance in a minimum of seven successive ping tests (jitter).

3.16.3. **Networking Tools**. Provide the following network tools:

- provide a firewall configuration tool to manage multicast and broadcast traffic,
- provide user selection of spanning tree protocol (STP) and rapid spanning tree pProtocol (RSTP) options,
- provide virtual local area network (VLAN) configuration tools;, and
- provide quality of service (QoS) selection and configuration tools.

3.16.4. **Alarms**. Provide the following alarm features:

- provide 24 hr. monitoring of user selected alarms; and
- provide option of sending email and text messages of triggered alarms.

4. CONSTRUCTION AND WORK METHODS

4.1. **General**. Provide and install all materials, including support, calibration, and test equipment, to ensure an operating and functional wireless radio system. This includes installation of power and data cables, and the

power grounding and lightning suppression systems. Before beginning installation, inspect each site to verify suitability of the design for installation, grounding, and lightning protection. Provide written documentation to the Engineer for approval before installation. Utilize the latest available industry standard construction techniques with a minimum number of parts, subassemblies, circuits, cards, and modules to maximize standardization and commonality. Design equipment for ease of maintenance and orient component parts to be readily accessible for inspection and maintenance.

4.2. **Radio Mounting**. Provide and install all necessary radio mounts, standoffs, brackets, hardware, and grounding assemblies for the mounting surface shown in the plans. Install all radios at specified locations as shown on the plans. Any deviation between actual mounting location and those specified must be pre-approved.

4.3. **Antenna Mounts**. Provide and install all antenna mounts, standoffs, brackets, hardware, transmission line, hanger kits, grounding kits, and lightning suppressors for the mounting surface shown in the plans. Install all antennas at specified center lines. Perform antenna alignment for each path and compare with path calculations. Any variation between calculated and actual values must be brought to the attention of the Engineer.

4.4. **System Power and Grounding**. Before installation, provide a written description of the proposed grounding and lightning protection design. Connect the equipment to the 115 V circuits provided in the equipment cabinets at the sites. Bond all equipment racks in conformance with the approved manufacturer's installation specification. Ground all equipment racks to the single-point ground for the site. Provide grounding and lightning protection for all cable runs at the top of the support structure and at the equipment cabinet entry port. If the equipment cabinet and associated entry port is not collocated on the support structure, the grounding and lightning protection will also be provided at the bottom of the support structure.

4.5. **System Optimization**. Optimize equipment alignment and settings at each site to provide a complete, operational system.

4.6. **Conductors**. Provide conductors that meet the requirements of the most current version of the National Electrical Code (NEC) Provide conductors that are cut to proper length before assembly. It is not permissible to "double-back" conductors to take up slack inside the cabinet. Lace conductors neatly with nylon lacing or plastic straps. Organize conductors neatly inside the cabinet and secure cables with clamps. When connecting to hardware inside the cabinet, provide service loops at connection points. No splicing of cables or exposed conductors are allowed. Label with UV resistant methods to identify all conductors.

4.7. **Relocation**. Perform the relocation in strict conformance with the requirements herein and as shown on the plans. Completion of the work will present a neat, workmanlike, and finished appearance. Maintain safe construction practices during relocation.

Inspect the existing radio equipment, with a representative from the Department, and document any evidence of damage before removal. Conduct a pre-removal test in conformance with the testing requirements contained in this Item to document operational functionality. Remove and deliver to the Department existing radio equipment that fail inspection.

Before removal of existing radio equipment, disconnect and isolate the power cables from the electric power supply and disconnect all communication cabling from the equipment located inside the cabinet. Coil and store power and communication cabling inside the cabinet until such time that it can be relocated. Remove existing radio equipment as shown on the plans only at such time as authorized.

Use care to prevent damage to any support structures. Any components of the radio equipment or support structure damaged or lost will be replaced by the Contractor at no cost to the Department. Contractor to document and report to the Engineer any existing damage to equipment before removal.

Make all arrangements for connection to the power supply and communication source including any permits required for the work to be done under the Contract. Provide wire for the power connection at least the

minimum size indicated on the plans and insulated for 600 volts. The power connection will meet the requirements of the most current version of the NEC.

4.8. **Removal**. Disconnect and isolate any existing electrical power supply before removal of existing radio equipment.

Perform removal in strict conformance with the requirements herein stated and the lines, grades, details, and dimensions shown on the plans. Completion of the work will present a neat, workmanlike, and finished appearance.

Any components of the radio equipment damaged or lost will be replaced by the Contractor (with items requiring the approval of the Engineer) at no cost to the Department.

All materials not designated for reuse or retention by the Department will become the property of the Contractor and be removed from the project site at the Contractor's expense. Deliver items to be retained by the Department to a location designated on the plan sheets or General Notes. The Contractor is fully responsible for any removed equipment until released.

4.9. **Contractor Experience Requirements**. Utilize installers, testers, and integrators with at least the following requirements:

4.9.1. **Minimum Experience**. Three years continuous existence offering services in the installation of wireless communications. Experience must include the following:

4.9.1.1. Conducting radio installation studies consisting of:

- signal noise studies,
- spectrum analysis,
- antenna gain radio power calculations,
- system attenuation, and
- measurement of standing wave ratios.

4.9.1.2. Installation, troubleshooting, and repair of broadband radio systems consisting of:

- equipment installation,
- configuration of radios,
- antenna calibration, and
- cabling.

4.9.1.3. Installation, troubleshooting, and repair of interconnected Ethernet networks (LAN and WAN) consisting of:

- cabling,
- switch or router configuration, and
- network analysis.

4.9.2. **Completed Projects**. Three projects consisting of wireless communications installation, troubleshooting, and repair. Each project must include transmitting signals over a minimum of 1 mi. distance and installation of a minimum of three devices.

4.9.3. **Equipment Experience**. One project (may be one of the three in the preceding paragraph) in which the personnel worked in cooperation with technical representatives of equipment suppliers to perform specific stages of work. Contractor will not be required to furnish equipment on this project from the supplier who furnished documentation demonstrating this experience.

Submit the names, addresses, and telephone numbers of the references that can be contacted to verify the experience requirements given above.

4.10. **Documentation**.

Provide all licenses, where required, for any software or hardware in the system.

Provide a medical statement as to the safety of the unit to the general public (example: Pacemakers, etc.).

Provide proof of installer qualifications.

Provide all documentation described in this Specification, including written reports for:

- verification of the suitability of the design for installation, grounding, and lightning protection;
- communication link throughput tests;
- equipment grounding tests;
- system level test results to include performance charts, link summaries, climatic factors, losses, and standards, and
- wiring connection diagrams for the field installation and central installation.

4.11. **Testing**.

4.11.1. **New Installations**. Unless otherwise shown on the plans, perform the following tests on the applicable equipment or systems.

4.11.1.1. **Test Procedures Documentation**. Provide five copies of the test plan procedures and target values, as well as blank data forms 60 days before testing for each test required in this Specification. Include the sequence of the tests in the procedures. The Engineer will approve test procedures before submission of equipment for tests. Conduct all tests in conformance with the approved test procedures.

Record test data on the data forms, as well as quantitative results. No bid item measurement or payment will be made until the Engineer has verified the test results meet the minimum requirements of the Specification. The data forms for all tests, except design approval tests, must be signed by an authorized representative of the Contractor.

Provide written notice to the Engineer within 48 hr. of discovery of any testing discrepancy performed in testing by the Contractor. Furnish data forms containing the acceptable range of expected results as well as the measured values.

4.11.1.2. **Design Approval Test**. Conduct a design approval test on randomly selected units from the prototype design manufacturing run. If only one design prototype is manufactured, perform this test on that unit. If supplying multiple types of the equipment, provide and test a sample of each type.

Certification from an independent testing laboratory of a successfully completed design approval test is acceptable. Ensure that the testing by this laboratory is performed in accordance with the requirements of this Specification. Failure of independent tests to comply with the requirements of this Specification will be grounds for rejection of any certification.

Provide a copy of the certification to the District in which this equipment is installed. The data forms for the design approval tests must be signed by an authorized representative (company official) of the equipment manufacturer or by an authorized representative of an independent testing facility.

Notify the Engineer ten working days before conducting this testing. The Department may witness all the tests. Perform the following tests:

4.11.1.2.1. **Power Service Transients**. Provide UL Listed Type 1 or Type 2 SPD and labeled to UL1449 Third Edition, posted at UL.com, under Certifications UL Category Code VZCA, and have a 20kA I-nominal rating. Provide SPD rated as NEMA 4. SPD with integral EMI/RFI line filtering may be required if shown on the plans.

4.11.1.2.2. **Temperature and Condensation**. Meet the performance requirements, specified in this Item, when subjected to the following conditions in the order specified below:

- stabilize the equipment at -30°F and test as specified in the NEMA TS2 standard, Sections 2.2.7.3., "Low-Temperature Low-Voltage Tests" and Section 2.2.7.4., "Low-Temperature High-Voltage Tests," or most current version,
- allow the equipment to warm up to room temperature in an atmosphere having relative humidity of at least 40%. Operate the equipment for 2 hr., while wet, without degradation or failure, and
- stabilize the equipment at 165°F and test as specified in the NEMA TS2 standard, Sections 2.2.7.5., "High-Temperature High Voltage Tests" and Section 2.2.7.6., "High-Temperature Low-Voltage Tests," or most current version.

4.11.1.2.3. **Relative Humidity**. Meet the performance requirements, specified in this Item, within 30 min. of being subjected to a temperature of 165°F and a relative humidity of 18% for 48 hr.

4.11.1.2.4. **Vibration**. Show no degradation of mechanical structure, soldered components, or plug-in components, and operate in accordance with the manufacturer's equipment specifications after being subjected to the vibration tests as described in the NEMA TS2 standard, Section 2.2.8., "Vibration Test," or most current version.

4.11.1.2.5. **Power Interruption**. Provide automatic recovery from power failure within 305 sec. after resumption of power.

4.11.1.3. **Demonstration Test**. Conduct a demonstration test on applicable equipment at an approved Contractor facility. The Contractor may submit procedures and results from previous projects in the same District as this project, provided the materials and equipment are identical. Provide previous procedures and results no more than 5 yr. old. Notify the Engineer ten working days before conducting this testing. The Department may witness all the tests. Perform the following tests:

4.11.1.3.1. **Examination of Product**. Examine each unit carefully to verify that the materials, design, construction, markings, and workmanship are in accordance with the requirements of this Item,

4.11.1.3.2. **Continuity Tests**. Check the wiring to determine accordance with the requirements of the appropriate paragraphs in this Item, and

4.11.1.3.3. **Operational Test**. Operate each unit for at least 15 min. to permit equipment temperature stabilization and an adequate number of performance characteristics to ensure compliance with the requirements of this Item.

4.11.1.4. **Field Acceptance Test**. Following completion of equipment installation and operational optimization, submit an acceptance test plan to the Engineer for review and approval. During the official acceptance testing, provide the technical staff to conduct the measurements and adjustments called for in the testing. The Engineer will participate in the testing as the official test witness. Each page of the acceptance test document will provide for data recording of the test results, and the name of Contractor's representative conducting the test as well as a suitable field for the test date and signature of the Department's test witness. Upon the Engineer's approval of the test plan and the test schedule, the acceptance testing may begin.

Conduct a field acceptance test for each unit after installation as required to demonstrate compliance with the functional requirements with this Item. Exercise all stand-alone (non-network) functional operations. Provide a factory certified representative for installation and testing of the equipment. Notify the Engineer five working days before conducting this test. The field acceptance test will consist of at least the following:

4.11.1.4.1. **Physical Construction**. Verify physical construction is completed in conformance with the plans and Specification.

4.11.1.4.2. **Electrical Connections**. Verify that all connectors for grounding, surge suppression, and electrical distribution are tightened correctly and are quality connectors. Verify all power supplies and circuits are

operating under the proper voltages. Verify all power and communications cables are terminated correctly, secured inside the cabinet, and fitted with appropriate connectors.

4.11.1.4.3. **Grounding**. Field test equipment grounding for all ITS radio equipment installed in the field and provide written documentation to the Engineer. Where earth ground resistance values exceed 5 ohms, develop mitigation measures for consideration. Once mitigation measures are installed, re-test that ground and update the documentation.

4.11.1.4.4. **Interference**. Conduct a test site survey and interference analysis before the installation of the equipment. Measure the existing signal noise levels at each installation site for the proposed radio frequency, identify potential sources of interference, and document the findings in a written report to the Engineer. The purpose of this survey is to verify that the parameters measured during the design process have not substantially changed. If the new survey indicates that the proposed radio system will not function as designed, develop proposed mitigation strategies. Adjust antenna polarities and channel plans on equipment to minimize interference from other sources.

4.11.1.4.5. **Communication Link Quality**. Conduct signal tests for each communication link, including data throughput, transmit power and frequency, receiver performance and frequency, proper operation of switch over, proper operation of alarm and switches, and bit error rate (BER). Document results in a written report to the Engineer. Where measured throughput drops below 50 Mbps on any link, develop mitigation measures for consideration. Once mitigation measures, if any, are implemented on a communications link, re-test that link and update the documentation.

4.11.1.4.6. **System Paths**. Include the following in testing of the installed system paths:

- measure and record the transmitter and receiver channel frequency and polarity;
- measure and record the transmitter power;
- measure and record the receiver fade margin, perform a 1-hr. bit error rate test (BERT) on the primary equipment and record results; and
- verify the operation of all local alarm and control points using the alarm and monitoring equipment provided.

4.11.1.4.7. **Alarms**. Test and verify the operation of the alarms and monitor equipment in conformance with the acceptance test criteria.

4.11.1.5. **System Integration Test**. Conduct a system integration test on the complete functional system. Demonstrate all control and monitor functions for each system component for 72 hr. Notify the Engineer ten working days before conducting this testing. The Department may witness all the tests.

Provide systems integration test procedures for proper adjustment and calibration of subsystem components. Proper adjustment and calibration involves documenting settings used to meet functional requirements while providing a margin for adjustment when future conditions change. Utilize the Department's control software (when available) to perform subsystem testing. At a minimum, utilize this software to verify communication to the Department's equipment. The Contractor is responsible for being familiar with any existing Department equipment and software.

The failure of any one component material or equipment item in a system integration test is justification for rejecting the entire subsystem. Each subsystem component must function as a complete integrated subsystem.

4.11.1.6. **Final Acceptance Test**. Following completion of the demonstration test, field acceptance test, and system integration test for all subsystems, provide completed data forms containing all the data taken, including quantitative results for all tests, a set of "as-built" working drawings, and a written request to begin a data communication and final acceptance test. Provide "as-built" working drawings indicating the actual material, equipment, and construction of the various subsystem components.

Within ten calendar days of the request, execute a data communications test using a Department-supplied software program. The data communications test may be executed by the Engineer or the Contractor with the prior approval of the Engineer. The purpose of this test is to verify that the communications plan will operate with application software provided by the Department or Contractor-supplied software approved.

Perform the data communications test for a period of 72 hr. Ensure that the test can be performed for a continuous 72 hr. during a normal work week. If a message error or component failure occurs anywhere in the network, restart the 72-hr. test once repairs are completed. All components of the communications network must operate as an integral system for the duration of the test.

A message error is defined as the occurrence of a parity error, framing error, or data error in any component of the message. The error-free message rate is defined as the ratio of the number of messages in which no message error occurs to the number of messages transmitted. The error-free message rate must exceed 99.99% for acceptable transmission quality, both for the system as a whole and for each component of the network.

Provide all additional test results to the Engineer for review once a successful data communications test has been completed. If all the requirements of this special provision have been satisfied, Contract time will be suspended and all subsystems will be placed into operation and operate as a complete ITS radio communication system as intended for at least 30 calendar days.

Notify the Engineer of any defects suspected in integration or function of material or equipment. Investigate any suspected defects and correct if necessary. Provide a report of findings within two calendar days of notice of any suspected defects. Describe the nature of the any defects reported and any corrective action taken in the report. The integrated subsystems must operate defect free as a single complete system for at least 72 continuous hours during the 30-calendar day review period. If the number of defects or frequency of failures prevents all subsystems from operating as described above, the Engineer may reject the entire system integration test results and resume Contract time. Provide any necessary corrections and resubmit system integration test results and a request to begin a final acceptance test which may include “as-built” plans and a data communications test.

The project will not be accepted, notwithstanding other provisions in the Contract, until the system, inclusive of all subsystems, has operated satisfactorily for a period of 90 days and in full compliance with the plans and specifications after approval of all submitted test results and reports.

4.11.1.7. **Consequences of Test Failure**. If a unit fails a test, submit a report describing the nature of the failure and the actions taken to remedy the situation before modification or replacement of the unit. If a unit requires modification, correct the fault and repeat the test until successfully completed. Correct minor discrepancies within 30 days of written notice to the Engineer. If a unit requires replacement, provide a new unit, and then repeat the test until successfully completed. Malfunctions that will substantially delay receipt and acceptance of the unit will be enough cause for rejection of the unit.

Failure to satisfy the requirements of any test is considered a defect and the equipment is subject to rejection. The rejected equipment may be offered again for retest provided all noncompliance has been corrected.

If a failure pattern develops in similar units within the system, implement corrective measures, including modification or replacement of units, to all similar units within the system as directed. Perform the corrective measures at no additional cost to the Department or extension of time in Contract period.

4.11.1.7.1. **Consequences of Design Approval Test Failure**. If the equipment fails the design approval test, correct the fault, and repeat the design approval test until successfully completed.

4.11.1.7.2. **Consequences of Demonstration Test Failure**. If the equipment fails the demonstration test, correct the fault, and repeat the demonstration test until successfully completed.

4.11.1.7.3. **Consequences of Field Acceptance Test Failure**. If the equipment fails the field acceptance test, correct the fault, and repeat the field acceptance test until successfully completed.

4.11.1.7.4. **Consequence of System Integration Test Failure**. If the equipment fails the system integration test, correct the fault, and repeat the systems integration test until successfully completed.

4.11.1.7.5. **Consequences of Final Acceptance Test Failure**. If a defect within the system is detected during the final acceptance test, document and correct the source of failure. Once corrective measures are taken, monitor the point of failure until a consecutive 30-day period free of defects is achieved.

If after completion of the initial test period, the system downtime exceeds 72 hr. or individual points of failure have not operated for 30 consecutive days free of defects, extend the test period by an amount of time equal to the greater of the downtime in excess of 72 hr. or the number of days required to complete the performance requirement of the individual point of failure.

4.11.2. **Relocation and Removal**.

4.11.2.1. **Pre-Test**. Conduct performance testing before removal of radio equipment. Test all functional operations, identified in this Item, of the equipment in the presence of representatives of the Contractor and the Department. Ensure that both representatives sign the test report indicating that the equipment has passed or failed each function. Once removed, the equipment becomes the responsibility of the Contractor until accepted. Compare test data before removal and test data after installation. The performance test results after relocation must be equal to or better than the test results before removal. Repair or replace those components within the system which failed after relocation but which passed before removal.

4.11.2.2. **Post Test**. Testing of the radio equipment is for the purpose of relieving the Contractor of maintenance of the system. The Contractor will be relieved of the responsibility for maintenance of the system in accordance with Item 7, “Legal Relations and Responsibilities”, after a successful test period. The Contractor will not be required to pay for electrical energy consumed by the system.

After all existing radio equipment has been installed, conduct approved continuity, stand alone, and equipment system tests. Furnish test data forms containing the sequence of tests including all the data recorded as well as quantitative results for all tests. Submit the test data forms to the Engineer at least 30 days before the day the tests are to begin. Obtain Engineer’s approval of test procedures before submission of equipment for tests. Provide at least one copy of the data forms to the Engineer.

Conduct an approved stand-alone test of the equipment installation at the field sites. At a minimum, exercise all stand-alone (non-network) functional operations of the field equipment with all the equipment installed per the plans as directed. Complete the approved data forms with test results and provide to the Engineer for review and either acceptance or rejection of equipment. Provide at least 30 working days’ notice before all tests to permit the Engineer or his representative to observe each test.

The Department must conduct approved radio system tests on the field equipment with the Department’s central control software. The tests will, as a minimum, exercise all remote-control functions and display the return status codes from the equipment.

If any unit fails to pass a test, prepare a report, and deliver the report to the Engineer. Describe in the report the nature of the failure and the corrective action needed. If the failure is the result of improper installation or damage during reinstallation, reinstall or replace the unit and repeat the test until the unit passes successfully, at no additional cost to the Department or extension of time to the Contract period.

4.12. **Training**. Conduct a training class (minimum of 8 hr., unless otherwise noted in the plans) for up to ten representatives designated by the Department on procedures of installation, operations, testing, maintenance, and repair of all equipment specified within this Specification. Submit to the Engineer for approval, ten copies of the training material at least 30 days before the training begins. Conduct training within the local area unless otherwise authorized.

4.13. **Warranty**. Warrant the equipment against defects or failure in design, materials, and workmanship for a minimum of 3 yr. or in conformance with the manufacturer's standard warranty if that warranty period is greater. The start date of the manufacturer's standard warranty will begin after the equipment has successfully passed all tests contained in the final acceptance test plan. Any ITS radio equipment with less than 100% of its warranty remaining after the final acceptance test is completed will not be accepted by the Department. Guarantee that equipment furnished and installed for this project performs according to the manufacturer's published specifications. Assign, to the Department, all manufacturer's normal warranties or guarantees on all electronic, electrical, and mechanical equipment, materials, technical data, and products furnished for and installed on the project.

Repair or replace any malfunctioning ITS radio equipment at the Contractor's expense before beginning the final acceptance test plan.

Repair or replace, at the manufacturer's option, defective equipment during the warranty period at no cost to the Department. Any replaced units will inherit the remainder of the failed unit's warranty period.

Furnish replacement parts and all equipment, with transportation prepaid, within ten business days of notification of failure by the Department.

During the warranty period, provide technical support from the supplier. Provide this support within 4 hr. of request and provided by factory certified personnel or factory certified installers of the equipment.

Provide ongoing software and firmware updates during the warranty period at no cost to the Department. All updates will be tested and approved by the Department before installation by the Department.

The Manufacture or the Contractor must maintain an inventory of parts to support maintenance and repair of all ITS radio equipment based on the terms of the warranty.

Special Specification 6018
Digital Closed-Circuit Television (CCTV) Field Equipment

1. DESCRIPTION

Furnish, install, relocate, or remove closed-circuit television (CCTV) field equipment at locations shown on the plans, or as directed.

2. MATERIALS

2.1. **General Requirements**. Fabricate, provide, assemble, and install materials that are new, corrosion-resistant, and in strict accordance with the details shown on the plans and in the Specifications.

Provide CCTV field equipment that is compatible with software currently in operation to interface with the existing equipment and software located in the Department's Traffic Management Control (TMC) Centers across the state.

CCTV field equipment must include the following.

- Color video camera units
- Camera lenses, filters, control circuits, and accessories
- Camera housing
- Medium-duty pan and tilt units with click-and-drag position control
- Video and camera control and power cable connectors and assemblies
- Video, data, and power surge suppression
- Built-in ID generator

2.2. **Functional Requirements for Digital CCTV**. Provide color video cameras that produce digital video in standard definition or high definition that meet the following functional requirements.

2.2.1. **General**.

2.2.1.1. **Digital Signal Processing (DSP)**.

- Digital zoom
- Auto and manual iris control
- Auto and manual exposure control with built-in frame buffer
- Auto and manual focus control
- Built-in ID generator, with white letters on black outline minimum or approved equivalent

2.2.1.2. **Image Pickup Device**. Progressive scan digital CCD or CMOS sensor, 1.2-megapixel (1,200,000 pixels) or better.

2.2.1.3. **Resolution**. Support the following resolutions.

- 720p (1,280-pixel × 720-pixel array)
- 1,080p (1,920-pixel × 1,080-pixel array)
- D1 (720-pixel × 480-pixel array)
- CIF (352-pixel × 240-pixel array)
- VGA (640-pixel × 480-pixel array) at minimum depending on video stream configuration

2.2.1.4. **Frame Rate**. Allow user-selectable frame rates at 30, 15, seven, four, two, and one frame per second.

2.2.1.5. **Data Rate**. Scalable from 64 Kbps to 8 Mbps.

2.2.1.6. **Video Stream Format**. Allow simultaneous encoding and transmission of at least two configurable digital video streams in conformance with Moving Picture Experts Group- (MPEG-) 4, Part 10 (H.264). Support configuration of the following at minimum.

- H.264
- H.265
- H.264 + H.264

2.2.1.7. **Video Stream**. Support uni-cast (one-to-one) and multi-cast (one-to-many).

2.2.1.8. **Aspect Ratio**. Support width-to-height aspect ratio of 16:9.

2.2.1.9. **Image Quality**. Ensure that video produced by the camera is true; accurate; distortion-free; and free of transfer smear, oversaturation, and any other image defect that negatively impacts image quality under all lighting and weather conditions in color and monochromatic modes.

2.2.1.10. **Wide Dynamic Range (WDR)**. Operation with manual override option.

2.2.1.11. **Overexposure Protection**. Minimize glare and incur no permanent damage to the camera when pointed directly at strong light sources, including the sun, for brief periods.

2.2.1.12. **Geometric Distortion**. Zero.

2.2.1.13. **Signal-to-Noise Ratio (AGC Off**). Minimum 50 dB (weighted at 4.5 MHz).

2.2.1.14. **Electronic Shutter Speed**. Automatic shutter that is user selectable down to at least 1/10,000 sec.

2.2.1.15. **Electronic Image Stabilization**. User-selectable on or off electronic image stabilization at 5 Hz and 10 Hz minimum.

2.2.1.16. **Day (Color) and Night (Mono)**. Auto and manual switchover and iris control with user-selectable modes for auto and manual control capabilities.

2.2.1.17. **Auto White Balance**. Color quality that is maintained by a continuous through-the-lens automatic white balance for color temperatures from 2,850 K to greater than 5,100 K with less than 10-IRE unit unbalance.

2.2.1.18. **Inverted Operation**. Automatic image inversion or “flip” when rotating through 0° or 180° vertical tilt positions when not an integrated unit.

2.2.1.19. **Mean Time Before Failure**. At least 43,800 hr. or 5 yr. without mechanical malfunction or failure. Act of God failures are exempt.

2.2.2. **Lens**. Provide an integral lens assembly for each camera with the following features.

- An f/1.6 or better glass multi-coated zoom lens with variable focal lengths with a minimum 30X zoom range
- 12X auto and manual digital zoom minimum
- Automatic and manual focus and iris control

Provide lenses with capabilities for remote control of the zoom, focus, and iris operations. Provide mechanical or electrical means to protect the motors from over-running in extreme positions. Lens and controller system must be capable of auto iris and remote manual iris operation. Lens must be capable of

auto and manual zoom and focus control. Use motorized iris as opposed to auto iris type for system control capability.

2.2.3. **Network Interface Requirements**. Provide CCTV field equipment that can integrate with the Department's Lonestar™ software and into the Department's TMC CCTV control sub-systems by NTCIP 1205 Version 1.08 or higher, Open Network Video Interface Forum (ONVIF), or approved equal. Support Cohu, Pelco D, or Pelco P protocols, or approved equal, for control.

Provide camera equipment with a local area network (LAN) connection that supports the requirements detailed in IEEE 802.3 for 10/100 Ethernet connections for half-duplex or full-duplex, and provide auto negotiation. Provide equipment with at least one Ethernet port that has a 10/100 Base-TX connection. Provide connectors that conform to EIA and TIA requirements.

Support, at minimum, RTP, RTSP, UDP/IP, TCP/IP, IPv4, HTTP, IGMPv2, DHCP, NTP, IEEE 802.1x, Ethernet 802.3u, SNMP, RADIUS Key, and Telnet.

Provide camera equipment that supports local and remote configuration and management. Configuration and management functions must include access to all user-programmed features, including, but not limited to, network configuration, video settings, device monitoring, control setting, and security functions. Configuration and management must be achieved by serial login, Telnet login, web-based interface, or manufacturer software. Provide manufacturer software with camera for local configuration, system maintenance, and management control.

2.3. **Cable Assembly**. Provide camera power and communication cable assembly equipped with cables used for video feed; camera control, including PTZ function; communications signaling; and power supply. Camera power and communication cable may be configured as a composite cable or series of isolated cables. The following cable functions may be required depending on the data and video communication interface requirements, as shown on the plans.

2.3.1. **Ethernet**. Provide a shielded twisted pair (STP) Category 6 (or equivalent) at minimum rated for outdoor use in conformance with TIA/EIA 568B. Cable must not exceed an attenuation of 30 dB per 300 ft. of cable at 100 MHz.

2.3.2. **Power**. Provide three-wire, insulated for 300 V minimum, 115-VAC or 24-VAC power cabling between the camera and the power supply. If 24-VAC power is required, provide needed power supply conversion equipment.

Power may be achieved using Power over Ethernet (PoE) by a power supply or mid-span PoE injector, that must be considered part of the camera unit, and must conform to IEEE 802.3af or IEEE 802.3at or latest revision.

Provide power and communication cable assembly the entire length of the camera support structure from the camera to the cabinet with an additional 25 ft. of slack in the cabinet. Determine the appropriate length required for each site. The cable assembly must be considered part of the camera unit.

Provide any necessary data, video, or power conversion hardware to successfully integrate the camera unit into the field equipment cabinet hardware components and onto the communications backbone.

2.4. **Video Encoding Interoperability**. Video encoding and decoding equipment may be used by software or hardware means. Ensure camera's encoded video is interoperable with hardware and software decoders from other manufacturers. Ensure the camera's encoded video can be decoded by at least two other manufacturer's software or hardware decoders that are in use by the Department. Contact the Department for decoders supported before procurement of camera unit.

2.5. **Camera Housing**. Provide camera housing assembly and hardware material that reflects sunlight.

Provide camera housing with a sunshield to reduce the solar heating of the camera. The total weight of the camera (including housing, sunshield, and all internal components) must not exceed 25 lb.

Construct viewing window so that unrestricted camera views can be obtained at all camera and lens positions.

Provide gaskets at cable entry point to the camera housing to prevent moisture or dust entry.

When shown on the plans or identified in the General Notes, provide heating or cooling functionality with temperature sensors to maintain internal temperatures within the manufacturer-required operating temperature range.

2.6. **Pan-Tilt Unit**. Furnish and install a medium-duty anodized aluminum weatherproof pan-tilt unit at each camera site, conforming to NEMA 4X and IP-66 rating or better, when not integral to the camera unit and housing. Provide mounting adapter and required attachment hardware to install the pan-tilt unit to the pole or mounting bracket. Identify the type of mounting bracket and bolt pattern on shop drawings.

Provide a unit capable of at least 180° vertical range of movement and horizontal movement of 360°, full, continuous-rotation movement.

Provide a unit that has a pan and tilt speed of 20° per second minimum and is user-adjustable through the full speed range. Unit must be capable of simultaneous pan-tilt movements with variable pan-tilt positioning control allowing variable speeds that are proportional through the zoom range.

Provide pan-tilt unit with drive accuracy and drive repeatability of less than 1° and an automatic pre-position speed of 120° per second minimum to a user-defined preset position that is user-adjustable.

Provide a pan-tilt unit, when not integral to the camera housing, that can maintain static position and does not move by more than 1° in any direction in speeds greater than 35 mph.

Ensure that the pan-tilt unit has seals and gaskets to protect the motors, gears, and cables and that the seals and gaskets are resistant to ozone, ultraviolet radiation, and other pollutants inherent to all local environmental conditions.

When shown on the plans or identified in the General Notes, provide pan-tilt unit with heater that conforms to NEMA 4X when not integral to the camera unit and housing.

2.7. **Preset Functions**. Provide a camera unit capable of storing at least 62 presets for pan, tilt, zoom, and focus settings.

Provide a camera unit capable of user-programmable tours with at least four tours of up to 32 presets per tour. Any tours may be programmed for panning tours.

Provide a camera unit capable of user-programmable sector zones with at least eight zones allowing right and left pan limitations.

Provide a camera unit capable of user-programmable privacy zones with at least eight zones and click-and-drag position control by software.

2.8. **Connectors**. Provide and install connectors that are compatible with the communications equipment interfaces identified in Section 2.2.3. Network Interface and Section 2.3. Cable Assembly. Supply all mating connectors. Provide all connector pins and mating connectors that are plated to achieve good electrical connection and resistance to corrosion.

2.9. **Source ID Generator**. Use a built-in ID generator to insert camera ID over each of the camera-generated videos.

Provide at least two lines of alphanumeric, case-specific text supporting at least 20 ASCII characters per line, with a minimum character height of 20 pixels, that is user-programmable for displaying any combination of ID information consisting of at least camera, preset, privacy mask, low-pressure warning, compass, and time and date.

Allow user-selectable location of text to be displayed on the video image at the extreme top or bottom. Text display on the side of the image display is prohibited.

Automatically display the programmed ID with its associated video signal that can be turned on or off by user command.

In the event of signal loss or video signal failure, ID generator must automatically pass through failure message to display over video.

Submit list of available text displays to the Department as part of the documentation requirements.

2.10. **Cabinet Installation**. Install video communication equipment in a pole-mounted equipment cabinet or in a ground-mounted equipment cabinet as shown on the plans. Meet the following criteria.

- Contains all the lightning protection devices for data and video.
- Grounded to earth ground.
- Provides connectors for all inputs and outputs for data and video and additional ports for testing video and communications. Use the external connectors for testing and for connections to communication devices.

2.11. **Surge Protection**. Provide surge protection for the camera meeting the following requirements.

- **Mounting Adapter**. Electrically bonded to mounting structure.
- **Pan-Tilt Mechanism**. Electrically bonded to mounting adapter.
- **Camera Housing**. Electrically bonded to pan-tilt mechanism.
- **Power and Control Cable Surge Protector**. Integrated into cabinet surge protection system.

2.12. **Power Requirements**. Provide CCTV field equipment meeting all its specified requirements when the input power is 115 VAC ±20%, 60 Hz ±3 Hz. Maximum power required must not exceed 200 W, including optional equipment.

Provide appropriate voltage conversion, power injectors, or other power supply hardware if the camera equipment or any camera-related ancillary devices require operating voltages other than 115 VAC ±20%, such as 24 VAC or 12 VDC from solar power systems, or rely on PoE. Appropriate voltage converters or injectors must accept an input voltage of 115 VAC or 12 VDC from solar power systems as shown on the plans.

2.13. **Primary Input Power Interruption**. Provide CCTV field equipment that meets NEMA TS2, Section 2.1.4., “Power Interruption,” for traffic control system or most current version.

2.14. **Power Service Transients**. Provide CCTV field equipment that meets NEMA TS2, Section 2.1.6., “Transients, Power Service” or most current version.

2.15. **Power Service Protection**. Provide equipment that contains readily accessible, manually resettable or replaceable circuit protection devices (such as circuit breakers or fuses) for equipment and power source protection. Provide circuit breakers or fuses sized appropriately such that no wire, component, connector, PC board, or assembly is subject to current loads more than their respective design limits upon failure of any single circuit element or wiring.

2.16. **Modular Design**. Provide CCTV field equipment hardware installed inside the cabinet that is modular in design and that can be either shelf-mountable or EIA 19-in. rack mountable. Clearly identify modules and

assemblies with name, model number, serial number, and any other pertinent information required to facilitate equipment maintenance.

2.17. **Connectors and Harnesses**. Make all external connections using connectors that are uniquely keyed to preclude improper hookups. Color-code and appropriately label with UV-resistant material all wires to and from the connectors. Provide connecting harnesses of appropriate length and terminated with matching connectors for interconnection with the communications system equipment. Provide corrosion-resistant plated pins and mating connectors to improve conductivity. All connectors using solder-type connections must have each soldered connection covered by a piece of heat-shrink tubing securely shrunk to protect the connection for short-circuiting.

Provide a wiring diagram detailing wire function and connector pin-out.

2.18. **Environmental Design Requirements**. Provide equipment that conforms to NEMA TS2-2003 (R2008), International Electrotechnical Commission (IEC) 60529, and NEMA 250-2008 or most current version, for the following categories.

2.18.1. **Temperature**. Provide equipment that conforms to NEMA TS2, Section 2.1.5.1, or latest revision, and meets all the specified requirements during and after being subjected to any combination of the following conditions.

- Ambient temperature range of -30°F–165°F
- Temperature shock not exceeding 30°F per hour
- Relative humidity of 0%–100%

  Moisture condensation on all exterior surfaces caused by temperature changes

Provisions for a heater and blower function are required to maintain internal temperatures within the manufacturer's operating temperatures for temperature ranges internal to the camera unit not conforming to NEMA TS2, Section 2.1.5.1.

2.18.2. **Vibration**. Provide equipment that conforms to NEMA TS2, Section 2.1.9. and Section 2.2.3., or most current version, and meets all the specified requirements during and after being subjected to a vibration of 5 Hz–30 Hz up to 0.5 g applied in each of three mutually perpendicular planes for 30 min.

2.18.3. **Shock**. Provide equipment that conforms to NEMA TS2, Section 2.1.10. and Section 2.2.4., or most current version, and does not yield permanent mechanical deformation or any damage that renders the unit inoperable when subjected to a shock of 10 g applied in each of three mutually perpendicular planes for 30 min.

2.18.4. **Environmental Contaminants**. Provide equipment that conforms to IEC 60529, Section 14.2.6, or most current version, for IP-66 or greater rating when providing a pressurized unit.

Provide equipment that conforms to IEC 60529, Section 14.2.7., or most current version, for IP-67 or greater rating when providing a non-pressurized unit.

2.18.5. **External Icing**. Provide equipment that is tested to conform to NEMA 250-2003, Section 5.6 or latest revision.

2.18.6. **Corrosion**. Provide equipment that is tested to conform to NEMA 250-2003, Section 5.10.or latest revision, when located in Coastal Districts. Coastal Districts are Beaumont (BMT), Corpus Christi (CRP), Houston (HOU), Pharr (PHR), and Yoakum (YKM).

2.18.7. **Wind Rating**. Equipment must be operational in adverse weather conditions and able to withstand wind loads in accordance with Department's basic wind velocity zone map standard as shown on the plans without permanent damage to mechanical and electrical equipment.

3. CONSTRUCTION

3.1. **General**. Maximize standardization and consistency by using industry-standard techniques in equipment design and construction, with the minimum number of parts, subassemblies, circuits, cards, and modules. Design equipment for ease of maintenance.

Provide mounting bracket assemblies or apparatus to mount equipment on the following structures as detailed on the plans or in the ITS standards.

- ITS pole
- Overhead sign bridge or cantilever overhead sign structure
- Retaining wall
- Concrete column or parapet

Provide mounting bracket design with documentation submitted for approval before fabrication. Include all mounting plates, screws, bolts, nuts, washers, and ancillary hardware needed to fabricate the entire mounting bracket.

3.2. **Mechanical Components**. Provide stainless steel external screws, nuts, and locking washers. Self-tapping screws are not acceptable.

Provide parts that are made of corrosion-resistant material (e.g., plastic, stainless steel, anodized aluminum, or brass).

Protect all materials used in construction from fungus growth and deterioration due to sustained moisture.

Separate dissimilar metals by an inert dielectric material.

3.3. **Wiring**. Provide wiring that meets the NEC most current version. Provide wires that are cut to proper length before assembly. It is not acceptable to “double-back” wires to take up slack inside the cabinet. Lace wires neatly with nylon lacing or plastic straps. Organize cables inside the cabinet and secure cables with clamps. Provide service loops at connection points when connecting to hardware inside the cabinet. No splicing of cables or exposed wiring is allowed. Clearly label all wiring.

3.4. **Relocation of CCTV Field Equipment**. Perform the relocation in strict conformance with the requirements herein and as shown on the plans. Completion of the work must present a neat, workmanlike, and finished appearance. Maintain safe construction practices during relocation.

Inspect the existing CCTV field equipment with a representative from the Department, and document any evidence of damage before removal. Conduct a pre-removal test in accordance with the testing requirements contained in this Specification to document operational functionality. Remove and deliver to the Department existing CCTV field equipment that fails inspection.

Before removal of existing CCTV field equipment, disconnect and isolate the power cables from the electric power supply and disconnect all communication cabling from the equipment located inside the cabinet. Coil and store power and communication cabling inside the cabinet until it can be relocated. Remove existing CCTV field equipment as shown on the plans only when authorized.

Use care to prevent damage to any support structures. Any portion of CCTV field equipment or camera pole structure damaged or lost must be replaced by the Contractor at their expense. Contractor must document and report to the Department any existing damage to equipment before removal.

Make all arrangements for connection to the power supply and communication source, including any permits required for the work under the Contract. Provide wire for the power connection at least the minimum size indicated on the plans and insulated for 600 V. Meet the requirements of the NEC most current version.

3.5. **Removal of CCTV Field Equipment**. Disconnect and isolate any existing electrical power supply before removal of existing CCTV field equipment**.**

Perform removal in strict conformance with this Specification and the lines, grades, details, and dimensions shown on the plans. Completion of the work must present a neat, workmanlike, and finished appearance.

Any portion of the CCTV field equipment or cabinet internal components damaged or lost must be replaced by the Contractor (with items requiring approval) at no cost to the Department.

All materials not designated for reuse or retention by the Department will become the property of the Contractor and be removed from the project site at the Contractor's expense. Deliver items to be retained by the Department to a location shown on the plans or in the General Notes. The Contractor is fully responsible for any removed equipment until released.

3.6. **Contractor Experience Requirements**. Contractor or designated subcontractor must meet the following experience requirements.

3.6.1. **Minimum Experience**. Three years of continuous existence offering services in the installation of CCTV camera systems.

3.6.2. **Completed Projects**. Three completed projects consisting of at least five cameras in each project where the personnel installed, tested, and integrated CCTV cameras on outdoor, one or more permanently mounted structures and related camera control and transmission equipment. The completed CCTV camera system installations must have been in continuous satisfactory operation for at least 1 yr.

3.6.3. **Equipment Experience**. Three projects (may be the three in Section 3.6.2., "Completed Projects") in which the personnel worked in cooperation with technical representatives of equipment suppliers to perform specific stages of work. The Contractor is not required to furnish equipment on this project from the supplier that furnished documentation demonstrating this experience.

Submit the names, addresses, and telephone numbers of the references that can be contacted to verify the experience requirements.

3.7. **Documentation Requirements**. Provide at least two complete sets of operation and maintenance manuals in bound hard-copy format, as well as an electronic copy in Adobe PDF format on a CD/DVD or removable flash drive, that include the following.

- Complete and accurate wiring schematic diagrams.
- Complete installation procedures.
- Compliance matrix documenting conformance to this Specification.
- Complete performance specifications (functional, electrical, mechanical, and environmental) on the unit
- Complete parts list, including names of vendors for parts not identified by universal part number, such as JEDEC, RETMA, or EIA.
- Pictorial of component layout on circuit board.
- ID generator list of text display options.
- Complete maintenance and troubleshooting procedures.
- Complete stage-by-stage explanation of circuit theory and operation.
- Testing procedures and blank test forms.
- Recovery procedures for malfunction.
- Instructions for gathering maintenance assistance from manufacturer.
- Certification documentation verifying conformance with environmental and testing requirements contained in the Special Specification. Certifications may be provided by the manufacturer or independent laboratories.

Identify material that is copyrighted or proprietary in nature as part of the documentation submittal. The Department will comply with sensitive material, secure submittal documentation, and not distribute without written approval.

3.8. **Testing**.

3.8.1. **New Installations**. Unless otherwise shown on the plans, perform the following tests on the applicable equipment or systems.

3.8.1.1. **Test Procedures Documentation**. Provide five copies of the test procedures, including tests identified in Section 3.8.1.2. "Design Approval Test," Section 3.8.1.7. "Consequences of Test Failure," and blank data forms, to the Engineer for review and comment as part of material documentation requirements for each test required on this project. Include the sequence of the tests in the procedures. The Engineer will comment, approve, or reject test procedures within 30 days after Contractor submittal of test procedures. Contractor must resubmit if necessary rejected test procedures for final approval within 10 days. Review time is in calendar days. Conduct all tests in accordance with the approved test procedures.

Record test data on the data forms, as well as quantitative results. No bid item measurement or payment will be made until the Engineer has verified the test results meet the minimum requirements of the Specification. The data forms for all tests, except design approval tests, must be signed by an authorized representative of the Contractor.

Provide written notice within 48 hr. of discovery of any testing discrepancy identified during testing by the Contractor. Furnish data forms containing the acceptable range of expected results as well as the measured values.

3.8.1.2. **Design Approval Test**. Conduct a design approval test on one randomly selected unit from the prototype design manufacturing run. If only one design prototype is manufactured, perform this test on that unit. If supplying multiple types of equipment, provide and test a sample of each type.

Certification from an independent testing laboratory of a successfully completed design approval test is acceptable. Ensure that the testing by this laboratory is performed in accordance with this Specification. Failure of independent tests to comply with this Specification will be grounds for rejection of any certification.

Provide a copy of the certification to the District in which this Contract is executed. The data forms for the design approval tests must be signed by an authorized representative (company official) of the equipment manufacturer or by an authorized representative of an independent testing facility.

Notify the Engineer 10 working days before conducting this testing. The Department may witness all the tests. Perform the following tests.

3.8.1.2.1. **Power Service Transients**. Provide equipment that meets the performance requirements specified herein when subjected to the power service transients as specified in NEMA TS2, Section 2.2.7.2, "Transient Tests (Power Service)." of the NEMA TS2 standard, most current version.

3.8.1.2.2. **Temperature and Condensation**. Provide equipment that meets the performance requirements specified herein when subjected to the following conditions in the order specified below.

- Stabilize the equipment at -30°F and test as specified in NEMA TS2, Section 2.2.7.3, "Low-Temperature Low-Voltage Tests," and Section 2.2.7.4, "Low-Temperature High-Voltage Tests." of the NEMA TS2 standard, most current version
- Allow the equipment to warm up to room temperature in an atmosphere with relative humidity of at least 40%. Operate the equipment for 2 hr., while wet, without degradation or failure.
- Stabilize the equipment at 165°F and test as specified in NEMA TS2, Section 2.2.7.5, "High-Temperature High Voltage Tests," and Section 2.2.7.6, "High-Temperature Low-Voltage Tests." of the NEMA TS2 standard, most current version

3.8.1.2.3. **Relative Humidity**. Provide equipment that meets the performance requirements specified herein within 30 min. of being subjected to a temperature of 165°F and a relative humidity of 18% for 48 hr.

3.8.1.2.4. **Vibration**. Provide equipment that shows no degradation of mechanical structure, soldered components, or plug-in components and operates in accordance with the manufacturer's equipment specifications after being subjected to the vibration tests as described in NEMA TS2, Section 2.2.8, "Vibration Test" of the NEMA TS2 standard, most current version.

3.8.1.2.5. **Power Interruption**. Provide equipment that meets the performance requirements specified herein when subjected to nominal input voltage variations as specified in NEMA TS2, Section 2.2.10., "Power Interruption Test." of the NEMA TS2 standard, most current version.

3.8.1.3. **Demonstration Test**. Conduct a demonstration test on applicable equipment at an approved Contractor facility. The Contractor may submit procedures and results from previous contracts in the same District as this Contract provided the materials and equipment are identical and results are less than 5 yr. old. Notify the Engineer 10 working days before conducting this testing. The Department may witness all the tests. Perform the following tests.

3.8.1.3.1. **Examination of Product**. Examine each unit carefully and document that the materials, design, construction, markings, and workmanship comply with this Specification.

3.8.1.3.2. **Continuity Tests**. Check the wiring to determine conformance with the requirements of the appropriate paragraphs of this Specification.

3.8.1.3.3. **Operational Test**. Operate each unit for at least 15 min. to permit equipment temperature stabilization and an adequate number of performance characteristics to ensure compliance with this Specification.

3.8.1.4. **Field Acceptance (Stand-Alone) Test**. Conduct a field acceptance test for each unit after installation as required by the Engineer to demonstrate compliance with the functional requirements of this Specification. Exercise all stand-alone (non-network) functional operations. Notify the Engineer 5 working days before conducting this test. The field acceptance test may consist of the following.

3.8.1.4.1. **Physical Construction**. Document physical construction is completed in accordance with the plans and Specification.

3.8.1.4.2. **Electrical and Communication**. Document that all connectors for grounding, surge suppression, and electrical distribution are tightened correctly. Document all power supplies and circuits are operating under the proper voltages. Document all power and communications cables are terminated correctly, secured inside the cabinet, and fitted with appropriate connectors.

3.8.1.4.3. **Video Signal**. For analog signal format, conduct an impedance test, through a short 75-ohm coaxial cable connected to an oscilloscope waveform monitor, to ensure 75-ohm output impedance to conform to NTSC standards.

Using a digital, hand-held, battery-operated meter, conduct a test and measure the following video signal characteristics, if applicable.

3.8.1.4.3.1. **Sync**. Document the amplitude of the video synchronizing pulse and check for correct video level, coaxial cable continuity, and correct termination at 40 IRE.

3.8.1.4.3.2. **Luminance**. Document the white level and correct brightness setting at 100 IRE.

3.8.1.4.3.3. **Composite**. Document the overall amplitude of the video signal is at 140 IRE or 1 V peak to peak.

3.8.1.4.3.4. **Color Burst**. Document color burst amplitude at 40 IRE.

3.8.1.4.3.5. **Ground Loop**. Document that no ground loop exists in the video picture. Ground loop voltages in a video signal cause bars to be present on the video picture.

Document video image is present and free of oversaturation and any other image defect in color and monochrome modes.

Document video support of uni-cast and multi-cast video transmission modes.

Document the video signal from the camera is present and of consistent quality at all connection points between the camera, the cabinet, and any video conversion hardware.

3.8.1.4.4. **Communication**. For digital camera models, document network connection to the camera by ping or Telnet session from a remote PC.

3.8.1.4.5. **Pan-Tilt Mechanism**. Exercise pan, tilt, zoom, and focus on all directions, and execute at least three other unique programming commands, specified by the Department, to ensure that the communication link between the cabinet and the camera is functioning properly.

3.8.1.5. **System Integration Test**. Conduct a system integration test on the complete functional system. Demonstrate all control and monitor functions for each system component for 72 hr. Notify the Engineer 10 working days before conducting this testing. The Department may witness all the tests.

Provide systems integration test procedures for proper adjustment and calibration of subsystem components. Proper adjustment and calibration involve documenting settings used to meet functional requirements while providing a margin for adjustment when future conditions change. Use the Department control software (when available) to perform subsystem testing. At minimum, use this software to verify commands and confirmations, as well as detector actuations and occupancy dwell time. The Contractor must be familiar with any existing Department equipment and software.

The failure of any one component material or equipment item in a system integration test is justification for rejecting the entire subsystem. Each subsystem component must function as a complete integrated subsystem for a minimal continuous 72-hr. period during the system integration test.

3.8.1.6. **Final Acceptance Test**. Following completion of the demonstration test, stand-alone test, and system integration test for all subsystems, provide completed data forms containing all the data taken, including quantitative results for all tests, a set of as-built working drawings, and a written request to begin a data communication and final acceptance test. Provide as-built working drawings indicating the actual material, equipment, and construction of the various subsystem components, including established and calculated XY coordinates based on project control points, when shown on the plans. Perform field surveying and calculations under the supervision of and sealed by a licensed land surveyor.

Within 10 calendar days of the request, execute a data communications test using a Department-supplied software program or Contractor-supplied software approved by the Department. The data communications test may be executed by the Engineer or the Contractor with prior approval. The purpose of this test is to verify that the communications plant will operate with application software provided by the State.

Perform the data communications test for 72 hr. If a message error or component failure occurs anywhere in the network, resume the test once repairs are completed. All components of the communications network must operate as an integral system for the duration of the test.

A message error is defined as the occurrence of a parity error, framing error, or data error in any component of the message. The error-free message rate is defined as the ratio of the number of messages in which no message error occurs to the number of messages transmitted. The error-free message rate must exceed 99.99% for acceptable transmission quality, for the system and each component of the network.

Provide all additional test results for review once a successful data communications test has been completed. If all the requirements of this Specification have been satisfied, Contract time must stop, and all subsystems must be placed into operation and operate as a complete system for 90 days.

Notify the Engineer of any defects suspected in integration or function of material or equipment. Investigate any suspected defects and correct if necessary. Provide a report of finding within 2 calendar days of notice of any suspected defects. Describe the nature of any defects reported and any corrective action taken in the report. The integrated subsystems must operate defect-free as a single complete system for at least 72 hr. during a 30-calendar day review period. If the number of defects or frequency of failures prevents any subsystems from operating as described above, the Engineer may reject the entire subsystems integration test results and resume Contract time. Provide any necessary corrections and resubmit subsystems integration test results and a request to begin a final acceptance test that may include as-built plans and a data communications test.

The CCTV field equipment under this Specification will not be accepted until the system, including all subsystems, has operated satisfactorily for 90 days and in full compliance with the plans and Specifications after approval of all submitted test results and reports.

3.8.1.7. **Consequences of Test Failure**. If a unit fails a test, submit a report describing the nature of the failure and the actions taken to remedy the situation before modification or replacement of the unit. If a unit requires modification, correct the fault, and then repeat the test until successfully completed. Correct minor discrepancies within 30 days of written notice. If a unit requires replacement, provide a new unit, and then repeat the test until successfully completed. Major discrepancies that will delay receipt and acceptance of the unit will be enough cause for rejection of the unit.

Failure to satisfy the requirements of any test is considered a defect, and the equipment is subject to rejection. The rejected equipment may be offered again for retest provided all noncompliance has been corrected.

If a failure pattern develops in similar units within the system, implement corrective measures, including modification or replacement of units, on all similar units within the system as directed. Perform the corrective measures without additional cost or extension of the Contract period.

3.8.1.7.1. **Consequences of Design Approval Test Failure**. If the equipment fails the design approval test, correct the fault within 30 days and then repeat the design approval test until successfully completed.

3.8.1.7.2. **Consequences of Demonstration Test Failure**. If the equipment fails the demonstration test, correct the fault within 30 days and then repeat the demonstration test until successfully completed.

3.8.1.7.3. **Consequences of Field Acceptance (Stand-Alone) Test Failure**. If the equipment fails the stand-alone test, correct the fault within 30 days and then repeat the stand-alone test until successfully completed.

3.8.1.7.4. **Consequence of System Integration Test Failure**. If the equipment fails the system integration test, correct the fault within 30 days and then repeat the system integration test until successfully completed.

3.8.1.7.5. **Consequences of Final Acceptance Test Failure**. If a defect within the system is detected during the final acceptance test, document and correct the source of failure. Once corrective measures are taken, monitor the point of failure until a 30-consecutive-day period free of defects is achieved.

If after completion of the initial test period the system downtime exceeds 72 hr. or individual points of failure have not operated for 30 consecutive days free of defects, extend the test period by an amount of time equal to the greater of the downtime more than 72 hr. or the number of days required to complete the performance requirement of the individual point of failure.

3.8.2. **Relocation and Removal**.

3.8.2.1. **Pre-Test**. Provide five copies of the test procedures, including tests of the basic functionality of the unit and blank data forms, to the Engineer for review and comment as part of material documentation requirements. Functionality tests may include, but are not limited to, physical inspection of the unit and cable assemblies, lens iris and zoom control, video signal, and pan-tilt mechanism. Include the sequence of the tests in the procedures along with acceptance thresholds. The Engineer will comment, approve, or reject test procedures within 30 days after Contractor submittal of test procedures. Contractor must resubmit if necessary rejected test procedures for final approval within 10 days. Review time is in calendar days. Conduct all tests in accordance with the approved test procedures.

Conduct basic functionality testing before removal of CCTV field equipment. Test all functional operations of the equipment in the presence of Contractor and Department representatives. Ensure that both representatives sign the test report indicating that the equipment has passed or failed each function. Once removed, the equipment will become the responsibility of the Contractor until accepted by the Department. Compare test data before removal and test data after installation. The performance test results after relocation must be equal to or better than the test results before removal. Repair or replace those components within the system that failed after relocation but passed before removal.

3.8.2.2. **Post-Test**. Testing of the CCTV field equipment is to relieve the Contractor of system maintenance. The Contractor will be relieved of the responsibility for maintenance of the system in accordance with Item 7, "Legal Relations and Responsibilities," after a successful test period. The Contractor is not required to pay for electrical energy consumed by the system.

After all existing CCTV field equipment has been installed, conduct approved continuity, stand-alone, and equipment system tests. Furnish test data forms containing the sequence of tests, including all the data taken as well as quantitative results for all tests. Submit the test data forms at least 30 days before the day the tests are to begin. Obtain approval of test procedures before submission of equipment for tests. Send at least one copy of the data forms to the Engineer.

Conduct an approved stand-alone test of the equipment installation at the field site. At minimum, exercise all stand-alone (non-network) functional operations of the field equipment with all the equipment installed per the plans as directed. Complete the approved data forms with test results and submit to the Engineer for review and either acceptance or rejection of equipment. Provide at least 30 working days' notice before all tests to permit the Engineer or their representative to observe each test.

The Department will conduct approved CCTV field equipment system tests on the field equipment with the central equipment. The tests must, at minimum, exercise all remote control functions and display the return status codes from the controller.

If any unit fails to pass a test, prepare and deliver a report to the Engineer. Describe in the report the nature of the failure and the corrective action needed. If the failure is the result of improper installation or damage during reinstallation, reinstall or replace the unit and repeat the test until the unit passes successfully, at no additional cost to the Department or extension of the Contract period.

3.9. **Warranty**. Warrant the equipment against defects or failure in design, materials, and workmanship for at least 3 yr. or in accordance with the manufacturer's standard warranty if that warranty period is greater. The start date of the manufacturer's standard warranty will begin after the equipment has successfully passed all tests contained in the final acceptance test plan. Any CCTV field equipment with less than 90% of its warranty remaining after the final acceptance test is completed will not be accepted by the Department. Guarantee that equipment furnished and installed for this project performs according to the manufacturer's published specifications. Assign, to the Department, all manufacturer's normal warranties or guarantees on all electronic, electrical, and mechanical equipment, materials, technical data, and products furnished for and installed on the project.

CCTV field equipment must be repaired or replaced at the Contractor's expense before completion of the final acceptance test plan in the event of a malfunction or failure. Furnish replacement parts for all equipment within 10 days of notification of failure by the Department.

3.10. **Training**. Conduct a training class on installation, operations, programming hardware settings, IP programming, port settings, testing, maintenance, troubleshooting, and repair of all equipment specified herein for at least 24 hr., unless otherwise directed, for up to 10 representatives designated by the Department. Submit to the Engineer for approval 10 copies of the training material at least 30 days before the training begins. Conduct training within the local area unless otherwise authorized. Consider operations using Department's Lonestar software when developing training modules.

Revised
Geotechnical Engineering Report

West Laredo Corridor, Phase II

Las Cruces Drive

Laredo, Texas

March 21, 2014

Terracon Project No. 89145003A

Prepared for:

Civil Engineering Consultants, Inc.
Laredo, Texas

Prepared by:

Terracon Consultants, Inc.
Laredo, Texas

March 21, 2014

Terracon

Civil Engineering Consultants, Inc.
9652 McPherson Road, Suite No. 700
Laredo, Texas 78045

Attn: Mr. Frank Ramos, P.E.
P: [956] 729 7844
F: [956] 729 7854
E: framos@cectexas.com

Re: Revised Geotechnical Engineering Report
West Laredo Corridor, Phase II
Las Cruces Drive
Laredo, Texas
Terracon Project No. 89145003A

Dear Mr. Ramos:

Terracon Consultants, Inc. (Terracon) is pleased to submit our revised Geotechnical Engineering Report for the proposed realignment of Las Cruces Drive along Mines Road (FM 1472) in Laredo, Texas. We trust that this report is responsive to your project needs.

We appreciate the opportunity to work with you on this project and look forward to providing Construction Materials Testing services. Please contact us if you have any questions or if we can be of further assistance.

Sincerely,
Terracon Consultants, Inc.
(Firm Registration: TX-F-3272)

Martin Reyes, E.I.T.
Senior Staff Engineer

Gregory P. Stieben, P.E.
Senior Consultant

3-21-14

APR review by Joseph A Wasse, P.E – 89145003A
Copies To: Addressee: (2) Bound & (1) Electronic
Civil Engineering Consultants: Mr. Jeffrey G. Puig, P.E. jpuig@cectexas.com: (1) Electronic
Civil Engineering Consultants: Mr. Kyle Gass, P.E. kgass@cectexas.com: (1) Electronic

TABLE OF CONTENTS

Page

EXECUTIVE SUMMARY i
1.0 INTRODUCTION 1
2.0 PROJECT INFORMATION 1
2.1 Project Description 1
2.2 Site Location and Description 2
3.0 SUBSURFACE CONDITIONS 2
3.1 Geology 2
3.2 Typical Profile 2
3.3 Groundwater 3
3.4 Variations in Subsurface Conditions 4
4.0 RECOMMENDATIONS FOR DESIGN AND CONSTRUCTION 4
4.1 Geotechnical Considerations 4
4.2 Earthwork 4
4.2.1 General Site Preparation 5
4.2.2 Fill Materials and Placement 5
4.2.3 Compaction Requirements 6
4.3 Culvert Structure 6
4.4 Drilled Shafts 6
4.4.1 Axial Loading 7
4.4.2 Settlement 7
4.5 Shallow Footings 7
4.5.1 Capacity 7
4.5.2 Construction Considerations 7
4.6 Slope Stability 8
4.7 Erosion and Scour Considerations 9
4.8 Lateral Earth Pressures 10
4.9 Seismic Considerations 12
4.10 Underground Utility Design Recommendations and Construction Considerations 12
4.10.1 Trench Bearing Pressures 12
4.10.2 Modulus of Soil Reaction 12
4.10.3 Excavations 13
4.10.4 Trench Backfill 14
4.11 Pavements 14
4.11.1 New Roadway Realignment 15
4.11.2 Pavement Section Materials 17
4.11.3 Pavement Joints and Reinforcement 18
4.12 Sulfate Considerations 19
5.0 GENERAL COMMENTS 20

TABLE OF CONTENTS (continued)

APPENDIX A – FIELD EXPLORATION

Exhibit A-1	Field Exploration Description
Exhibit A-2	Site Location Plan
Exhibit A-3	Bore Location Plan
Exhibit A-4 thru A-13	WinCore Drilling Logs, Soil Strength Analysis, Skin Friction Design, Point Bearing Design, Foundation Capacity
Exhibit A-14 and A-15	DCP Test Data

APPENDIX B – LABORATORY TESTING

Exhibit B-1	Laboratory Testing
Exhibit B-2	Scour Analysis (Grain Size Distribution)

APPENDIX C – SUPPORTING DOCUMENTS

Exhibit C-1	General Notes
Exhibit C-2	Unified Soil Classification System
Exhibit C-3 thru C-8	Pavement Design Data
Exhibit C-3 thru C-8	Slope Stability Analyses

EXECUTIVE SUMMARY

This summary should be used in conjunction with the entire report for design purposes. It should be recognized that details were not included or fully developed in this section, and the report must be read in its entirety for a comprehensive understanding of the items contained herein. The section titled **GENERAL COMMENTS** should be read for an understanding of the report limitations.

A geotechnical investigation has been performed for the proposed realignment of Las Cruces Drive along Mines Road (FM 1472) in Laredo, Texas. As requested, two borings were drilled to depths of approximately 40 feet below the existing grade within the proposed roadway alignment.

Based on the information obtained from our subsurface exploration, the site can be developed for the proposed project. The following geotechnical considerations were identified:

- The subsurface soils at this site generally consist of Sandy Lean Clay (CL) and Clayey Sand (SC) underlain by Shale.

- Groundwater was observed at this site in borings B-1 and B-2 between depths of about 5 to 6 feet during and upon completion of the drilling operations. Note that this shallow groundwater condition will likely create some difficulties during construction.

- According to City of Laredo standards the on-site soils appear to be suitable for use as select fill.

- A shallow foundation system would be appropriate to support the structural loads imposed by the proposed culvert structure, provided the site is prepared as recommended in this report. Alternatively, the culvert may supported by drilled shafts. Shallow foundations are also appropriate to support retaining walls and other miscellaneous structures.

- Consideration should be given to additional subsurface exploration or testing within or near the creekbed. It is possible that soft or compressible soils may be present in that area.

- Flexible and rigid pavement systems may be considered for this project.

- Close observation of the construction operations discussed herein will be critical in achieving the design subgrade support. Therefore, we recommend that Terracon be retained to observe this portion of work.

REVISED
GEOTECHNICAL ENGINEERING REPORT
WEST LAREDO CORRIDOR, PHASE II
LAS CRUCES DRIVE
LAREDO, TEXAS

TERRACON PROJECT NO. 89145003A

MARCH 21, 2014

1.0 INTRODUCTION

As requested, Terracon is pleased to submit our revised Geotechnical Engineering Report for the proposed realignment of Las Cruces Drive along Mines Road (FM 1472) in Laredo, Texas. This project was authorized by Mr. Kyle Gass, P.E. through signature of the a Professional Services Subconsultant agreement between Civil Engineering Consultants, Don Durden, Inc. (CEC) and Terracon Consultants, Inc. dated January 22, 2014. The project scope was performed in general accordance with Terracon Proposal No. P89130179C, dated January 21, 2014

The purposes of this report were to describe the subsurface conditions observed at the boring locations drilled for this study, analyze and evaluate the test data, and provide recommendations with respect to:

- Subsurface soil conditions
- Soil parameters for foundation design
- Slope stability analysis
- Groundwater conditions
- Pavement recommendations
- Earthwork recommendations

2.0 PROJECT INFORMATION

2.1 Project Description

ITEM	DESCRIPTION
Pavements/Structures	The project will include about 1,100 feet of new right-of-way improvements on Las Cruces Drive. Based on information provided to us, a creek crossing will be made using a culvert structure, likely consisting of a seven 10 ft by 6 ft MBC structure. The project will also include retaining walls and related underground utilities.
Construction Type	Pavements will likely consist of flexible sections; however, rigid sections have been included in the event that a rigid pavement is to be considered. Related utility lines will be PVC material, sanitary sewer manholes will be concrete or fiber-glass material.

ITEM	DESCRIPTION
Traffic Loads	Based on information provided to us by CEC, the roadway realignment will be classified as a Major Collector. For the analyses, traffic loads of 3.7M (flexible) and 4.9M (rigid) ESALs were used as per a "Traffic Analysis for Highway Design" memorandum, dated September 6, 2012, provided by TxDOT, and verified by CEC in an email transmission, dated March 13, 2014.
Grading	Cuts and fills for the pavements are estimated to be between 1 and 2 feet for this project site. Cuts on the order of 7 to 8 feet will be required for the proposed culvert installation.

2.2 Site Location and Description

Item	Description
Location	The proposed roadway realignment of Las Cruces Drive along Mines Road (FM 1472) is located in northwestern Laredo, Texas. The existing Las Cruces Drive will be adjusted from its current alignment to the southwest to align with Flecha Lane to the west of Mines Road.
Current Ground Cover	Native grass, brush, cactus, mesquite trees and bare soils.
Existing Improvements	Portions of the roadway alignment will be located within undeveloped land and the other portions will be in developed properties.
Existing Topography	Most of the roadway alignment is relatively flat and level with exception of an 8-foot deep creek channel at or near station 16+00.

3.0 SUBSURFACE CONDITIONS

3.1 Geology

The Geologic Atlas of Texas, Laredo Sheet, 1976, published by the University of Texas at Austin, Bureau of Economic Geology, has mapped the Fluviatile Terrace Deposits (Qt) of the Pleistocene geologic age in the vicinity of the site. The Fluviatile Terrace Deposits (Qt) consists of gravel, sand, silt and clay; composed of materials similar to those present in contiguous alluvium. The Fluviatile Terrace Deposits (Qt) are underlain the Laredo Formation (El), consisting of shale.

3.2 Typical Profile

We were provided with a schematic drawing of the proposed roadway realignment. Our field personnel used the drawing to identify approximate boring locations. Based on the results of the borings, subsurface conditions on the project site can be generalized as follows:

Approximate Depth of Stratum, feet	Material Encountered	Consistency/Density
0 to 7.5	SANDY LEAN CLAY (CL) [1]; brown	Medium stiff
0 to 20	CLAYEY SAND (SC) [2]; brown and	Loose to very dense

Approximate Depth of Stratum, feet	Material Encountered	Consistency/Density
	yellowish brown	
15 to 40	SHALE [3]; bluish gray	Hard

[1] The SANDY LEAN CLAY (CL) material could undergo low to moderate volumetric changes (shrink/swell) should it experience changes in its in-place moisture content. Encountered in boring B-1.

[2] The CLAYEY SAND (SC) material would be expected to undergo low volumetric changes (shrink/swell) should it experience changes in its in-place moisture content. This material is considered volumetrically stable with regards to change in moisture content due to its granular nature. It may transmit water easily during rainfall events.

[3] The SHALE material could undergo moderate volumetric changes (shrink/swell) should it experience changes in its in-place moisture content.

Conditions encountered at each boring location are indicated on the individual boring logs. Stratification boundaries on the boring logs represent the approximate location of changes in soil types; in-situ, the transition between materials may be gradual. Details for each of the borings can be found on the boring logs in Appendix A of this report.

3.3 Groundwater

The boreholes were observed while drilling and after completion for the presence and level of groundwater. The water levels observed in the boreholes are noted on the attached boring logs, and are summarized below:

Boring No.	Depth to groundwater first observed while drilling, ft. [1]	Depth to groundwater after 15 minutes wait period, ft. [1]
B-1	13.0 (El. 403.6)	6.0 (El. 410.6)
B-2	8.0 (El. 409.4)	5.0 (El. 412.4)

[1] Depths measured from existing ground surface at time of measurement to intervals of 15 minutes.

Based on a preliminary grading plan provided by CEC, the proposed invert of the culvert will be at about El 411.40 feet. Given the thickness of the invert slab and the need to perform some over-excavation beneath the culvert, it is likely that groundwater will be present at the base of the excavation. A shallow groundwater condition in the clayey sands revealed at that depth will become a general hindrance to equipment due to rutting and pumping of the soil surface. The Contractor will need to be prepared for this situation, and may need to install a dewatering system to successfully complete the construction.

Long term observations in piezometers or observation wells sealed from the influence of surface water are generally required to more accurately evaluate groundwater levels and fluctuations. Groundwater level fluctuations occur due to seasonal variations in the amount of rainfall, runoff and other factors not evident at the time the borings were performed. Therefore, groundwater levels during construction or at other times in the life of the structure may be higher or lower than the levels indicated on the boring logs. The possibility of groundwater level fluctuations should be considered when developing the design and construction plans for the project.

3.4 Variations in Subsurface Conditions

The subsurface conditions were explored by two soil borings, one on either side of the creek. No subsurface exploration was made in the creek bottom. It should be noted that the soil conditions in that area may vary significantly from those revealed by the two borings. It is likely that in the past the creek bottom scoured, and subsequently backfilled with sedimentation. This material may be softer and more compressible than the soil conditions encountered by the borings. Considerations should be given to additional subsurface exploration or testing within or near the creekbed.

4.0 RECOMMENDATIONS FOR DESIGN AND CONSTRUCTION.

The following recommendations are based upon the data obtained from our field and laboratory programs, project information provided to us and on our experience with similar subsurface and site conditions.

4.1 Geotechnical Considerations

The near surface soils within portions of this site exhibited increased silt/sand content with depth and low to moderate plasticity. These moisture sensitive soils tend to loose significant strength with increases in their in-situ moisture contents. Therefore, these surficial soils may pose construction difficulties, especially during and after periods of wet weather conditions. Also, as noted above, the excavation for the culvert will likely extend below the existing groundwater level. The Contractor must be prepared to deal with this condition, and possibly may need to install a dewatering system.

Based on our findings, the subsurface soils at this site generally exhibit a low expansion potential. Based on the information developed from our field and laboratory programs and on method TEX-124-E in the Texas Department of Transportation (TxDOT) Manual of Testing Procedures, we estimate that the subgrade soils at this site exhibit a Potential Vertical Rise (PVR) of about 1 inch in their present conditions. The actual movements could be greater if inadequate drainage, ponded water, and/or other sources of moisture are allowed to infiltrate beneath the structures after construction.

4.2 Earthwork

The following presents recommendations for site preparation and placement of engineered fills on the project. The recommendations presented for design and construction of earth supported elements including foundations are contingent upon the following recommendations outlined in this section.

Earthwork on the project should be observed and evaluated by Terracon. The evaluation of earthwork should include observation and testing of engineered fill if any, foundation bearing soils, and other geotechnical conditions exposed during the construction of the project.

4.2.1 General Site Preparation

Construction operations may encounter difficulties due to the wet or soft surface soils becoming a general hindrance to equipment due to rutting and pumping of the soil surface, especially during and soon after periods of wet weather. If the subgrade cannot be adequately compacted to minimum densities as described in the **"Compaction Requirements"** section of this report, one of the following measures may be required:

- Removal and replacement with select fill;
- Drying by natural means if the schedule allows;
- Chemical treatment; and
- Possible installation of a dewatering system.

Prior to placing any fill, all loose material and any otherwise unsuitable materials should be removed from the construction area. Wet or dry material should either be removed or moisture conditioned and re-compacted. After stripping and grubbing, the subgrade should be proof-rolled where possible to aid in locating loose or soft areas. Proof-rolling can be performed with a 15-ton roller or fully loaded dump truck. Soft, dry and low-density soil should be removed or compacted in place prior to placing fill.

4.2.2 Fill Materials and Placement

Select fill and on-site soils should meet the following criteria.

Fill Type [1]	USCS Classification	Acceptable Location for Placement
Granular select fill [2]	Varies	Can be used in pavement areas and as a pad beneath the proposed culvert.
Select fill	CL and/or SC (10≤PI≤20)	Can be used to construct all grade adjustments within the proposed development and pavement areas.
On-site soils	Varies	The on-site soils appear suitable for use as select fill within the pavement, landscape and behind the curb areas provided they are free of organics and debris. Unless indicated otherwise in this report.

1	Prior to any filling operations, samples of the proposed borrow and on-site materials should be obtained for laboratory moisture-density testing. The tests will provide a basis for evaluation of fill compaction by in-place density testing. A qualified soil technician should perform sufficient in-place density tests during the filling operations to evaluate that proper levels of compaction, including dry unit weight and moisture content, are being attained.
2	Granular select fill should consist of 2004 TxDOT Item 247, Type A or B, Grade 1 or 2 crushed limestone or gravel base material. Granular select fill can also consist of crushed concrete meeting the criteria specified in the 2004 TxDOT Item 247, Type D, Grade 1 or 2.

4.2.3 Compaction Requirements

Item	Description
Fill Lift Thickness	All fill should be placed in thin; loose lifts about 8 inches, with compacted thickness not exceeding 6 inches.
Compaction of On-site and Select Fill Materials	95% of the material's maximum dry density (TEX 114E).
Compaction of Granular Select Fill	98% of the material's maximum dry density (TEX 113E).
Moisture Content of Pavement Subgrade	The materials should be moisture conditioned between optimum and +4 percentage points of the optimum moisture content. Unless indicated otherwise.
Moisture Content of Select Fill and Granular Select Fill	The materials should be moisture conditioned between -2 and +3 percentage points of the optimum moisture content.

4.3 Culvert Structure

The culvert structure may bear directly on the prepared subgrade, as described above. Consideration should be given to additional subsurface exploration or testing within or near the creekbed. It is possible that soft or compressible soils may be present in that area. The presence of a compressible zone within the creekbed could result in damaging differential movements relative to the less compressible zones on either side of the creek. If a soft, compressible zone is revealed, it should be removed and replaced as outlined in the **Earthwork** portion of this report.

To provide a strong, level bearing surface, we recommend a minimum of 6 inches of granular select fill be placed and compacted as outlined above. The select fill pad will also serve as a working platform during construction. Also, as noted above, the excavation for the culvert will likely extend below the existing groundwater level. The Contractor must be prepared to deal with this condition, and possibly may need to install a dewatering system. Prior to the installation of the culvert, the subgrade must consist of a firm, non-yielding surface.

The culvert should be designed to withstand the lateral earth pressures imposed by the backfill soils. For the culvert, the "at-rest" pressures provided in the **Lateral Earth Pressures** section of this report apply. The culvert must be designed to support the loading imposed by the overlying backfill, pavement section, and surcharge loading.

4.4 Drilled Shafts

The designers may choose to support the proposed culvert on drilled shafts to avoid the potential construction difficulties created by a shallow groundwater condition. Due to the presence of loose sand deposits, shallow groundwater, and highly cemented shale at this site, underreamed shafts will be difficult to construct. The contractor should be prepared to utilize casing or slurry techniques to control groundwater influx during excavation. Therefore, recommendations are only provided for straight-sided shafts. The following presents recommendations regarding axial loading and settlement. Should drilled shafts be selected for the design, additional recommendations can be provided regarding lateral loading, shaft installation, and scour.

4.4.1 Axial Loading

Compressive axial loads on shaft foundations are resisted by both skin friction along the shaft and by end bearing at the base of the shaft. End bearing and skin friction recommendations for each boring are contained in **Appendix A** at the end of this report. Results from laboratory and field TCP data were used to determine end bearing and skin friction values. The boring logs, soil strength analysis, skin friction, point bearing and foundation capacity parameters provided in this report were obtain and supported by the TxDOT engineering software program WinCore, which analyses and reports soil borings in accordance with TxDOT standards.

4.4.2 Settlement

For drilled shafts, total settlements, based on the allowable bearing pressures provided in **Appendix A**, should be less than one (1) inch for properly designed and constructed straight-sided drilled piers. Settlement beneath individual shafts will be primarily elastic with most of the settlement occurring during construction. Differential settlement may also occur between adjacent shafts. The amount of differential settlement could approach 50 to 75 percent of the total shaft settlement. For properly designed and constructed shafts, differential settlement between adjacent shafts is estimated to be less than three-fourths (¾) of an inch. Settlement response of drilled shafts is impacted more by the quality of construction than by soil-structure interaction. Improper shaft installation could result in differential settlements that are significantly greater than we have estimated.

4.5 Shallow Footings

Shallow spread footings may be used to support the headwall loads of the proposed culvert. The following provides recommendations for shallow footings.

4.5.1 Capacity

The spread footings should be at least 3 feet below bottom of the wall. Spread footings may be designed for an allowable bearing pressure of 2,000 psf, based on dead load conditions or 3,000 psf based on total load, whichever results in a larger bearing surface. The above dead load bearing pressures include a factor of safety of 3. The total load bearing pressures include a factor of safety of 2.

The spread footings can provide some uplift resistance for those structures subjected to wind, soil pressures, or other induced structural loading. The uplift resistance of a spread footing may be computed using the effective weight of the soil above the spread footing along with the weight of the spread footing and structure. A buoyant soil unit weight of 50 pcf may be assumed for the on-site soils placed as fill above the footing, provided the fill is properly compacted.

4.5.2 Construction Considerations

Footing foundations should preferably be neat excavated. Excavation should be accomplished with a smooth-mouthed bucket. If a toothed bucket is used, excavation with this bucket should be stopped 6 inches above the final excavation surface and the excavation completed with a smooth-mouthed bucket or by hand labor. Due to the presence of sand, caving of footing excavations may occur. Therefore, the contractor should be prepared to use forms.

If the footing foundations are overexcavated and formed, the backfill around the foundation sides should be achieved with compacted select fill, lean concrete, compacted cement stabilized sand (two sacks cement to one cubic yard of sand) or flowable fill. Compaction of select fill should be as described below.

The bearing surface should be excavated with a slight slope to create an internal sump for runoff water collection and removal. If surface runoff water in excess of 2 inches accumulates at the bottom of the excavation, it should be pumped out prior to concrete placement. Under no circumstances should water be allowed to adversely affect the quality of the bearing surface.

If the spread footing is buried, backfill above the foundation maybe the excavated on-site soils or select fill soils. Backfill soils should be compacted to at least 95 percent of the maximum dry density as determined by the moisture/density relationship test (TEX 114E). Moisture contents for on-site soils ranging from -2 to +3 and imported select fill soils should range from -2 to +3 percentage points of the optimum moisture content. The backfill should be placed in thin, loose lifts not to exceed 8 inches, with compacted thickness not to exceed 6 inches.

4.6 Slope Stability

Slopes will be created at this site during channel grading operations. The stability of a created or constructed slope is dependent on several criteria which include:

- The height of the slope
- The material comprising the slope
- The slope angle
- Erosion considerations

Global slope stability analyses were performed utilizing a commercial slope stability software program, SLIDE. This software calculates the factor of safety against slope failure using a two-dimensional limiting equilibrium method. The slope stability analyses were performed for the short-term (end of construction) and long-term conditions for the channel cross-section provided to us by CEC.

Based on the field and laboratory test results and our past experience with similar soils, the strength parameters in the following tables were used in the global stability analyses.

Soil Parameters for Global Stability Analyses

Soil Description	Depth (feet)	Unit Weight (pcf)	Short-Term		Long-Term	
			c (psf)	ϕ (deg)	c' (psf)	ϕ' (deg)
Clayey Sand	0 – 15	120	0	28	0	28
Shale	15 – 40	150	4,000	33	250	25

Where,

c	Unconsolidated-Undrained Cohesion
ϕ	Unconsolidated-Undrained Friction Angle
c'	Consolidated-Drained Cohesion
ϕ'	Consolidated-Drained Friction Angle

A summary of the global stability analyses for the channel is presented in the table below. The results are also presented graphically in Appendix C.

Summary Of Global Stability Analyses for Channel		
Channel	**Short-Term**	**Long-Term**
	1.80	1.82
Minimum Factors of Safety Required by TxDOT	1.3	1.3

Our global stability analyses indicate that the minimum factors of safety for the short-term and long-term conditions are satisfied in both cases. At the time of this report, the final channel grading plan is not available. We understand slopes will also be created to the north of the site following the removal of a portion of the existing Las Cruces Drive. If possible, those slopes should be 3H:1V, or flatter. Also, the design will need to consider matching of the existing slope angles beyond the limits of the project site.

A slope angle of 3H:1V is generally considered to be the steepest slope that can be properly maintained using commercially available equipment. Steeper slopes might be considered if the face of the slope is protected from erosion and/or if the fill section is reinforced with soil reinforcement such as geogrid. Steeper slopes would generally have to be “maintenance free” since available construction equipment would not be usable on some slopes. Any surcharge loads should not be placed within 10 feet of the crest of any slope at this site.

Erosion due to surface runoff could potentially weaken the strength of the material comprising the slope, and thus, the slope stability. Erosion control such as riprap, gabions, erosion control blankets, turf reinforcement mats, or other stabilization methods should be addressed to protect the slope. Further protection of the sloped section may be provided with the use of concrete terrace drains or other interceptor drains designed to protect the slope from surface water. Maintenance of the slope should be done on as “as needed basis”.

4.7 Erosion and Scour Considerations

The level of the creek will rise during flood events. The structure can be designed to withstand these high water events. However, the creek bank will be subject to erosion and the creek bed will be subject to scour. Distribution Analysis test results are presented in Appendix B. If erosion is not controlled, then it is possible that a loss of ground will occur that could affect the abutments or the soils behind the abutments. Several methods are currently available to help

control erosion and include: rip-rap (concrete, boulder, or cobble), gabions, erosion blankets, etc. Each of these methods will require periodic maintenance for them to be effective during the life of the structure.

4.8 Lateral Earth Pressures

The lateral earth pressure recommendations given in the following paragraphs are applicable to the design of culverts and rigid retaining walls subject to slight rotation, such as cantilever, or gravity type concrete walls. These recommendations are not applicable to the design of modular block, geogrid reinforced backfill (MSE) walls.

Earth pressures will be influenced by structural design of the walls, conditions of wall restraint, methods of construction and/or compaction and the strength of the materials being restrained. Two wall restraint conditions are shown. Active earth pressure is commonly used for design of free-standing cantilever retaining walls and assumes some wall movement. The "at-rest" condition assumes no wall movement, as is the case with a culvert. The recommended design lateral earth pressures do not include a factor of safety and do not provide for possible unbalanced hydrostatic pressure on the walls.

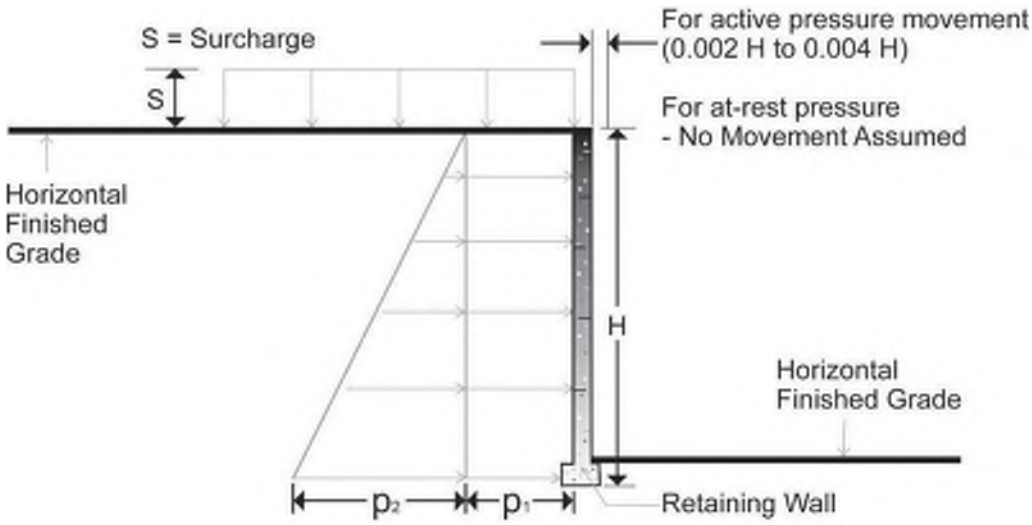

Earth Pressure Coefficients

Earth Pressure Conditions	Coefficient for Backfill Type	Equivalent Fluid Density, pcf	Surcharge Pressure, psf (p_1)	Earth Pressure, psf (p_2)
Active, Ka	Granular – 0.33 On-site Soil – 0.49	40 59	(0.33)S (0.49)S	(40)H (59)H
At-Rest, Ko	Granular – 0.46 On-site Soil – 0.66	55 79	(0.46)S (0.66)S	(55)H (79)H
Passive, Kp	Granular – 3.4 On-site Soil – 2.0	425 245	--- ---	--- ---

Applicable conditions to the above include:

- For active earth pressure, wall must rotate about base, with top lateral movements of about 0.002 **H** to 0.004 **H**, where **H** is wall height.
- For passive earth pressure to develop, wall must move horizontally to mobilize resistance.
- Uniform surcharge, where S is surcharge pressure.
- In-situ soil backfill weight a maximum of 120 pcf.
- Horizontal backfill compacted at least 95 percent of standard Proctor maximum dry density.
- Loading from heavy compaction equipment not included.
- No unbalanced hydrostatic pressures acting on wall.
- No dynamic loading.
- No safety factor included in soil parameters.
- Ignore passive pressure within the scour depth and to a depth of 3 feet.

Backfill placed against structures should consist of granular soils or low plasticity cohesive soils. On-site soils are suitable for use as backfill behind walls. For the granular values to be valid, the granular backfill must extend out from the base of the wall at an angle of at least 45 and 60 degrees from vertical for the active and passive cases, respectively. To calculate the resistance to sliding, a value of 0.35 should be used as the ultimate coefficient of friction between the footing and the underlying soil. An allowable bearing pressure of 1,500 psf can be used for the wall footings. The wall footing should bear at least 3 feet below the bottom of the wall.

To control the water level behind the wall, we recommend a perimeter drain be installed at the foundation level as shown on the adjacent figure and described in the following notes.

- Granular backfill in this case consists of ASTM No. 57 stone or equivalent.
- Perforated pipe should be rigid PVC, sized to transport the expected water.
- Exterior ground surface should consist of a 24 inch clay cap sloped to drain as designed.
- The clay cap can be replaced by a pavement section.
- Weep holes can be considered in lieu of perimeter drains for retaining walls if the water seepage will not impact the structure.

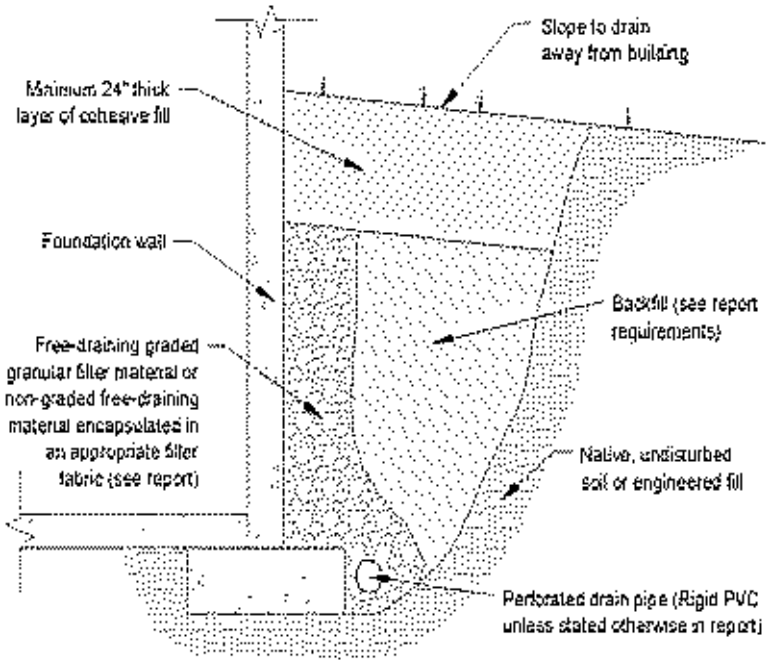

If adequate drainage is not possible, then combined hydrostatic and lateral earth pressures should be calculated for on-site soils backfill using an equivalent fluid weighing 90 and 100 pcf for active and at-rest conditions, respectively. For granular backfill, an equivalent fluid weighing 85 and 90 pcf should be used for active and at-rest, respectively. These pressures do not include the influence of surcharge or equipment loading, which should be added. Heavy equipment should not operate within a distance closer than the exposed height of retaining walls to prevent lateral pressures more than those provided.

4.9 Seismic Considerations

Description	Value
2012 International Building Code Site Classification (IBC) [1]	D [2]
Maximum Considered Earthquake 0.2 second Spectral Acceleration (S_S) [3]	0.071 g
Maximum Considered Earthquake 1.0 second Spectral Acceleration (S_1) [3]	0.018 g

1	The site class definition was determined using CPT N-values in conjunction with section 1613.3.2 in the 2012 IBC and Table 20.3-1, Chapter 20 of the 2010 ASCE-7.
2	Section 20.1 in the 2010 ASCE-7 requires a site soil profile determination extending to a depth of 100 feet for seismic site classification. The current scope does not include the required 100 foot soil profile determination. Borings extended to a maximum depth of 40 feet, and this seismic site class definition considers that competent soil continues below the maximum depth of the subsurface exploration. Additional exploration to deeper depths would be needed to confirm the conditions below the current depth of exploration.
3	The Spectral Acceleration values were determined using publicly available information provided on the United States Geological Survey (USGS) website. The spectral acceleration values can be used to determine the site coefficients using Tables 1613.3.3 (1) and 1613.3.3 (2) in the 2012 IBC.

4.10 Underground Utility Design Recommendations and Construction Considerations

The recommendations and criteria presented in the following subsections can be used to aid in the design and analysis of buried pipes and utilities at this site.

4.10.1 Trench Bearing Pressures

The subsurface soils have sufficient bearing capacity to support buried pipes. A net allowable bearing pressure of 1,500 pounds per square foot (psf) maybe used to support the buried pipes. This bearing pressure includes a factor of safety of 3. The bearing pressure also assumes that the bearing surface will be relatively free and clean of any soft or moist material and loose debris.

4.10.2 Modulus of Soil Reaction

A modulus of soil reaction for the in-situ soil, E_s or E_n, of at least 700 psi may be used in the design of the flexible pipe. Additionally, the modulus of soil reaction, E_b or sometimes referred to as E', of the backfill material supporting the sides of the pipe is also used in the design of the flexible piping. This value is a function of several variables that include:

- Soil type that comprises the backfill material supporting the pipe sides.

- Degree of compaction of the backfill material supporting the pipe sides.
- Lift thickness of the backfill material supporting the pipe sides.

Values for E_b (E') vary, depending on the pipe backfill and bedding materials. Fine-grained soils consisting of primarily clay and silt should not be used for bedding materials and backfill around the pipe. More specific information regarding this design parameter is included in ASTM D2321 entitled "Standard Practice for Underground Installation of Thermoplastic Pipe for Sewers and Other Gravity Flow Applications". The following table presents typical modulus of soil reaction values, E_b, for various backfill materials at different compaction ranges.

Type of Material	Modulus of Soil Reaction, E_b [1], psi, For Degrees of Compaction			
	Dumped (no compaction)	Slight <85%	Moderate 85% to 95%	High >95%
Fine Grained Soil (LL<50): CL, ML	NR	NR	NR	NR
Fine Grained Soil (LL<50) with >25% Coarse-Grained Material: CL, ML or Coarse-Grained Soil with fines: GM, GC, SM, SC	NR	NR	1000	2000
Coarse-Grained Soil with <12% fines: GW, GP, SW, SP	NR	1000	2000	3000
Crushed Rock	1000	3000		

[1] These values do not include a factor of safety. A factor of safety may be needed for design purposes. These values are for use in predicting the initial deflections only. If a high degree of compaction is not achieved in the backfill adjacent to the sides of the pipe, an approximate deflection lag factor should be applied for long-term deflection estimates. It should be noted that LL refers to the Liquid Limit, and NR means that the use of these materials is not recommended by ASTM D2321 for the backfill envelope.

4.10.3 Excavations

Various excavations are planned for site improvements. The actual excavation depths were not provided to us at the time of this report submittal. However, shoring, bracing, sloping, benching or a combination of each will be required during excavation or trenching of the surrounding soils during construction operations. If groundwater seepage occurs in an excavation with a sand side slope, instability could occur, even for a relatively flat slope. Temporary dewatering or shoring may be required to address this condition. Excavations and trenches should follow Occupational Safety and Health Administration (OSHA) Safety and Health Standards (29 CFR Part 1926 Revised, 1989), state and federal standards and guidelines. All excavation and safety/health issues are responsibility of the contractor.

4.10.4 Trench Backfill

Appropriate trench backfill is generally determined by several factors including the bearing capacity of the soil supporting the pipe, requirements of the pipe manufacturer regarding support of the pipe, and the proposed improvements at the ground surface along the trench. Pipe manufacturers generally require a specified bedding and granular material around the pipe.

Typically, the bedding and embedment material around buried utilities is designed to support and protect the piping. The backfill material above the embedment also helps to protect the piping and to support any overlying structure, roadway, or other improvement. Inadequate compaction of this material can lead to excessive settlement of the backfill, stress in the pipe, and premature distress to any overlying improvement. Therefore, we recommend that the embedment and backfill material be properly placed, moisture conditioned, and compacted in accordance with the appropriate project documents or those requirements established by applicable city or county standard specifications for public works construction.

Backfill beneath roadways should attempt to match the soil type exposed in the excavation sidewalls. As a compaction guideline, we recommend that all trench backfill be placed in loose lifts not to exceed 8 inches, moisture conditioned between -2 and plus +3 percentage points of the optimum moisture content, and compacted to at least 95 percent of the maximum dry density as evaluated by TEX-114-E.

Flowable fill can be used as an alternative to soil backfill, particularly beneath roadways. Flowable fill typically consists of a mixture of sand, portland cement, fly ash, and water and is readily available from ready-mixed concrete suppliers. This very low strength cementitious fill is placed in a slurry form and readily takes the shape of the excavation. Properly designed and placed, it can be excavated by a backhoe for future repairs or modifications as required.

Embedment backfill along the sides to the top of the pipe and possibly 12 to 24 inches above the pipe should consist of materials that are acceptable to the project civil engineer or materials meeting those requirements established by any applicable city or county standard specifications for public works construction. To avoid potential damage to the pipe, the embedment material should not contain materials exceeding 3 inches in maximum dimension. Onsite soils should be suitable as backfill above the embedment material provided that the soils do not contain deleterious material or particles exceeding 3 inches in maximum dimension.

Construction equipment with wheel or gross loads exceeding the pipe's design strength should not be driven over or close to the pipeline. Additional cover placed on top of the pipe or an alternate route should be provided for machinery producing excessive loads.

4.11 Pavements

As we stated before, we understand that the pavements at this site will consist of flexible pavement sections; however, rigid sections are included in this report in the event that a rigid pavement is to be considered. Discussion for both types of pavements will be addressed in the following sections.

4.11.1 New Roadway Realignment

The City of Laredo requires pavement subgrade modification for soil with a Plasticity Index (PI) value of 20 and greater. Based on a grading plan provided to us, we understand that cuts and fills are estimated to be between 1 and 2 feet for this project site. We anticipate that the proposed pavement subgrade alignment will have a Plasticity Index (PI) ranging from 7 to 19 based on the borings drilled at this site. Therefore, subgrade modification may not be required for the existing pavement subgrade.

Our subsurface soil exploration determined that the near-surface on-site soils are suitable sources of borrow material. These soils may be used as fill provided they are excavated, stockpiled and tested prior to use in the pavement areas.

Sulfate tests were performed on samples collected from the site to observe for a possible adverse reaction with chemical treatment such as lime or cement. The test results indicate sulfate values in the range of 2,306 ppm to 27,800 ppm. Therefore, lime or cement subgrade stabilization should not be considered as an option to improve its strength and load carrying capacity. We recommend using one of the following subgrade stabilization alternatives to maintain the PI and reduce swell potential.

- Sub Base Layer;
- Asphalt Stabilized Base;
- Thicker Granular Base section in combination with geogrid;

As requested, on-site Dynamic Cone Penetrometer (DCP) tests were performed at the boring locations to assess and evaluate the in-place strength of undisturbed subgrade. Based on the results of our DCP field testing program and according to the provided correlation values of DCP versus CBR as described in ASTM D 6951, the correlated CBR values are presented in Appendix A; we recommend that a CBR value of about 3 be used in the pavement design analysis for the existing subgrade. The results of the DCP tests are included in Appendix A of this report.

Pavements are designed using either a California Bearing Ratio (CBR) value or modulus of subgrade reaction (k). Based on published correlations between k and CBR values, an estimated k value of 80 pound per cubic inch (pci) and Effective Roadbed Soil Resilient Modulus (Mr) of 4,500 pounds per square inch (psi) for the natural subgrade may be used for this site.

We understand that the roadway realignment will be classified as **Major Collector**. If this is not applicable, we need to revise our design recommendations. The design traffic loads were obtained from a “Traffic Analysis for Highway Design” memorandum, dated September 6, 2012, provided by TxDOT. Other design parameters listed in the City of Laredo Ordinance were used for the roadway pavement design.

The traffic data and assumptions that were used for the proposed pavement section are as follows:

Major Collector	
18-Kip ESAL	3,7M (flexible) / 4.9M (rigid)
Reliability, %	90
Initial Serviceability Index, p_o	4.2 flexible and 4.5 rigid
Terminal Serviceability Index, p_t	2.5 flexible and rigid
Standard Deviation, S_o	0.45 flexible and 0.35 rigid
Design Life, years	20
Estimated CBR	3

Pavement sections were designed and analyzed utilizing the TxDOT FPS 21 software program. The resulting pavement options are described below:

Minimum Recommended Flexible Pavement Section Thickness, inches Crushed Limestone Base			
Component	**Option 1**	**Option 2**	**Option 3**
Hot Mix Asphaltic Concrete (HMAC) Type C or D	2	6.5	6.5
HMAC Base Course Type A	8.5	---	---
Granular Base Course [1, 2]	8.5	20	16
Geogrid [3]	---	---	Yes
Moisture Conditioned Subgrade	6	6	6

1	Asphaltic base material may be used in place of granular base course material. Every 2.5 inches of granular base course material may be replaced with 1 inch of asphaltic base material. However, the minimum thickness of the asphaltic base material is 4 inches.
2	The prime coat should consist of sealing the granular base with prime oil such as an MC-30 or an emulsion as indicated by the TxDOT standards.
3	The geogrid should be Tensar TriAx TX-140, TX-5 or equivalent material and should be placed on top of the moisture conditioned and compacted subgrade.

Minimum Recommended Rigid Pavement Section Thickness, inches [1]	
Component	
Reinforced Concrete	11
Stego Wrap Vapor Barrier [2]	yes
Moisture Conditioned Subgrade	6

1	The thickness design analysis used for concrete pavement is not highly sensitive to the type of subgrade supporting the concrete pavement. However, a subbase consisting of 6-inches of crushed limestone base material immediately beneath the concrete will be less affected by water, sulfate attack and traffic loads and should help to provide improved long term, uniform support for the concrete pavement. As a result, the life and performance of the pavement should be improved. We recommend that this be considered for concrete pavement. The base material also will separate the concrete slab from the high sulfate subgrade soils. Thus, reducing sulfate attack on concrete structures. If a granular subbase or any other appropriate vapor barrier is not used, we recommend using a sulfate-resistant concrete mix with preapproved concrete chemical admixtures by the engineer.
2	Stego Wrap Vapor Barrier can be used to isolate soil materials containing sulfate from the concrete pavement. The vapor barrier should be placed on top of the moisture conditioned and compacted subgrade. For additional information, please refer to Stego's manufacturer prior to installation. Also, the sulfate issue could be addressed as part of the concrete mix design.

4.11.2 Pavement Section Materials

Presented below are selection and preparation guidelines for various materials that may be used to construct the pavement sections. Submittals should be made for each pavement material. The submittals should be reviewed by the geotechnical engineer and appropriate members of the design team and should provide test information necessary to verify full compliance with the recommended or specified material properties.

Hot Mix Asphaltic Concrete Surface Course and Base Course - The asphaltic concrete surface and base courses should be plant mixed, hot laid types C or D (surface course) and A or B (base course) respectively, meeting the master specifications requirements of 2004 TxDOT Standard Specifications Item 341 and Item SS 3224 (2011) and specific criteria for the job mix formula. The mix should be compacted between 91 and 95 percent of the maximum theoretical density as measured by Tex-227-F. The grade of the asphalt cement should be PG 70-22. However, this requirement may be waived at the engineer's discretion if the asphalt supplier warrants that the asphalt cement can meet all applicable safety, environmental and constructability requirements. Aggregates known to be prone to stripping should not be used in the hot mix.

Pavement specimens, which should be either cores or sections of asphaltic pavement, should be tested according to Test Method TEX-207-F. The nuclear-density gauge or other methods which correlate satisfactorily with results obtained from project pavement specimens may be used when approved by the Engineer. Unless otherwise shown on the plans, the Contractor should be responsible for obtaining the required pavement specimens at their expense and in a manner and at locations selected by the Engineer.

Concrete: Concrete should have a minimum 28-day design compressive strength of 4,000 psi. ASTM C150, Type I/II cement is commonly used in the local area and is appropriate for this project according to ACI standards.
Granular Base Course: The base material should be composed of crushed limestone base materials meeting the requirements of 2004 TxDOT Standard Specification Manual Item 247, Type A, Grade 1 or 2.

The base should be compacted to at least 98 percent of the maximum dry density as determined by the modified moisture-density relationship (TEX 113E) at moisture contents ranging between -2 and +3 percentage points of the optimum moisture content.

Prime Coat - The prime coat should consist of sealing the base with prime oil such as an MC-30 or an emulsion. The prime coat should be applied at a rate of about 0.2 to 0.5 gallons per square yard with materials which meet TxDOT 2004 Standard Specifications Item 300. The prime coat will help to reduce penetration of rainfall and other moisture which penetrates the base. However, due to weathering and traffic, treatment will probably be necessary on a periodic basis to protect the base. In addition, isolated areas of the base which have developed pot holes or other distress may need to be removed and replaced prior to application of a prime coat for maintenance. The prime coat without additional surface treatment may not be very effective when using non-treated base material.

Moisture Conditioned Subgrade: The subgrade should be scarified to a depth of 8 inches and moisture conditioned between -2 and +3 percentage points of the optimum moisture content. The subgrade should then be compacted to at least 95 percent of the maximum dry density determined in accordance with Tex-114-E. This should result in a compacted, moisture conditioned layer about 6 inches thick.

4.11.3 Pavement Joints and Reinforcement

The following is recommended for all concrete pavement sections in this report. Refer to ACI 330 “Guide for Design and Construction of Concrete Parking Lots” and “TxDOT Standard Specifications” for additional information.

Item	Description
Reinforcing Steel	Nº 3 reinforcing steel bars at 12 inches on-center-each-way, Grade 60. Nº 4 reinforcing steel bars at 18 inches on-center-each-way, Grade 60.
Contraction Joint Spacing	15 feet each way for pavement thickness of 6 inches or greater. Saw cut control joints should be cut within 6 to 12 hours of concrete placement.
Contraction Joint Depth	At least ¼ of pavement thickness.

Item	Description
Contraction Joint Width	One-fourth inch or as required by joint sealant manufacturer.
Construction Joint Spacing	To attempt to limit the quantity of joints in the pavement, consideration can be given to installing construction joints at contraction joint locations, where it is applicable.
Construction Joint Depth/Width	Full depth of pavement thickness. Construct sealant reservoir along one edge of the joint. Width of reservoir to be ¼ inch or as required by joint sealant manufacturer. Depth of reservoir to be at least ¼ of pavement thickness.
Isolation Joint Spacing	As required to isolate pavement from structures, etc.
Isolation Joint Depth	Full depth of pavement thickness.
Isolation Joint Width	One-half to 1 inch or as required by the joint sealant manufacturer.
Expansion Joint	It is recommended installing expansion joints every 90 feet for pavements with long and straight sections. All joints should be sealed. If all joints, including saw cuts, are not sealed then expansion joints should be installed.

Construction joints in the 11-inch thick concrete pavement should include dowels with the following dimensions:

Dowel Diameter	1⅛ inch
Dowel Spacing	12 inches on center
Dowel Length	16 inches
Dowel Embedment	7 inches

4.12 Sulfate Considerations

Sulfate tests were performed on selected samples collected from the borings to check for a possible adverse reaction with lime or cement treatment. Test locations and depths were chosen to provide a range of test locations regards to depth and across the site. Tests were not performed in all borings depth. Sulfate content concentrations for the borings along with their approximate depth and nearest boring number are as follow:

Boring No.	Approximate Depth, feet	Sulfate Content, ppm
B-1	2.5 - 4	27,800
B-1	18.5 - 20	5,560
B-2	2.5 - 4	15,333
B-2	8.5 - 10	2,306

The test results indicate sulfate values between 2,306 and 27,800 ppm. The sulfate effect at this site is considered to be severe to very severe. Using the criteria from ACI 201.2R, the test results classify as Class 2 and 3 exposure, respectively.

The test results indicate that the sulfate concentrations in the soils are above levels deemed to be of a high risk for adverse reactions when mixed with a calcium-based additive TxDOT (>3,000 ppm), the National Lime Association (>3,000 ppm) and AASHTO (>5,000 ppm). Due to the sulfate rich soils encountered at this site, cement and/or lime soil treatment should not be used for pavement subgrade.

Concrete exposed to these materials is also subject to sulfate attack which can result in the deterioration of the concrete over time. The American Concrete Institute (ACI) and the Texas Department of Transportation (TxDOT) provide guidance and specifications regarding sulfates in soil and groundwater.

5.0 GENERAL COMMENTS

Terracon should be retained to review the final design plans and specifications so comments can be made regarding interpretation and implementation of our geotechnical recommendations in the design and specifications. Terracon also should be retained to provide observation and testing services during grading, excavation, foundation construction and other earth-related construction phases of the project.

The analysis and recommendations presented in this report are based upon the data obtained from the borings performed at the indicated locations and from other information discussed in this report. This report does not reflect variations that may occur away from our boring, across the site, or due to the modifying effects of weather. The nature and extent of such variations may not become evident until during or after construction. If variations appear, we should be immediately notified so that further evaluation and supplemental recommendations can be provided.

The scope of services for this project does not include either specifically or by implication any environmental or biological (e.g., mold, fungi, and bacteria) assessment of the site or identification or prevention of pollutants, hazardous materials or conditions. If the owner is concerned about the potential for such contamination or pollution, other studies should be undertaken.

This report has been prepared for the exclusive use of our client for specific application to the project discussed and has been prepared in accordance with generally accepted geotechnical engineering practices. No warranties, express or implied, are intended or made. Site safety, excavation support, and dewatering requirements are the responsibility of others. In the event that changes in the nature, design, or location of the project as outlined in this report are planned, the conclusions and recommendations contained in this report shall not be considered valid unless Terracon reviews the changes and either verifies or modifies the conclusions of this report in writing.

APPENDIX A

FIELD EXPLORATION

FIELD EXPLORATION DESCRIPTION

Terracon personnel used the site plan provided by the client to establish the bore locations in the field. A copy of the Bore Location Plan indicating the approximate boring locations is included in Appendix A. The location of the borings should be considered accurate only to the degree implied by the means and methods used to define them.

A truck-mounted, rotary drill rig equipped with continuous flight augers was used to advance the boreholes. The Texas Department of Transportation (TxDOT) employs a drilling protocol in which no samples are taken from the subsurface and only field penetration tests are conducted. The field penetration tests are referred to as the Texas Cone Penetrometer (TCP) test. The test is described in the Foundation Exploration and Design Manual of the Bridge Division of TxDOT (1974). The cone is a 3-inch diameter, 60 degree steel cone and is described in TEX-132-E. Selected soil samples were recovered by driving a 2-inch O.D. split-barrel sampler. The samples were sealed and transported to our laboratory for testing and classification.

Our field representative prepared the field logs as part of the drilling operations. The field logs included visual classifications of the materials encountered during drilling and our field representative interpretation of the subsurface conditions between samples. The boring logs included with this report represent the engineer's interpretation of the field logs and include modifications based on visual observations and testing of the samples in the laboratory.

In addition, on-site Dynamic Cone Penetrometer (DCP) tests were performed at this site to evaluate the in-place strength of undisturbed soil. The DCP tests extended to about 24 inches below existing grade, test results are presented in this Appendix. The DCP measures the penetration resistance of a 17.6 pound hammer through undisturbed soil and/or compacted materials. The penetration resistance may be related to in-situ strength such as estimated in-situ CBR (California Bearing Ratio), shear strength of strata, thickness of strata and bearing capacity. The tests have been performed according to ASTM D 6951.

The scope of services for our geotechnical engineering services does not include addressing any environmental issues pertinent to the site.

Source: Google Earth, 2009

N

Project Mngr:	MR
Drawn By:	LC
Checked By:	MR
Approved By:	MR

Project No.	89145003
Scale:	N.T.S.
File No.	89145003
Date:	02.10.2014

Terracon
Consulting Engineers and Scientists
615 GALE STREET, BUILDING B LAREDO, TX 78041
PH. (956) 729-1100 FAX. (956) 791-1071

SITE LOCATION PLAN

West Laredo Corridor, Phase II
Las Cruces Drive
Laredo, Texas

EXHIBIT

A-2

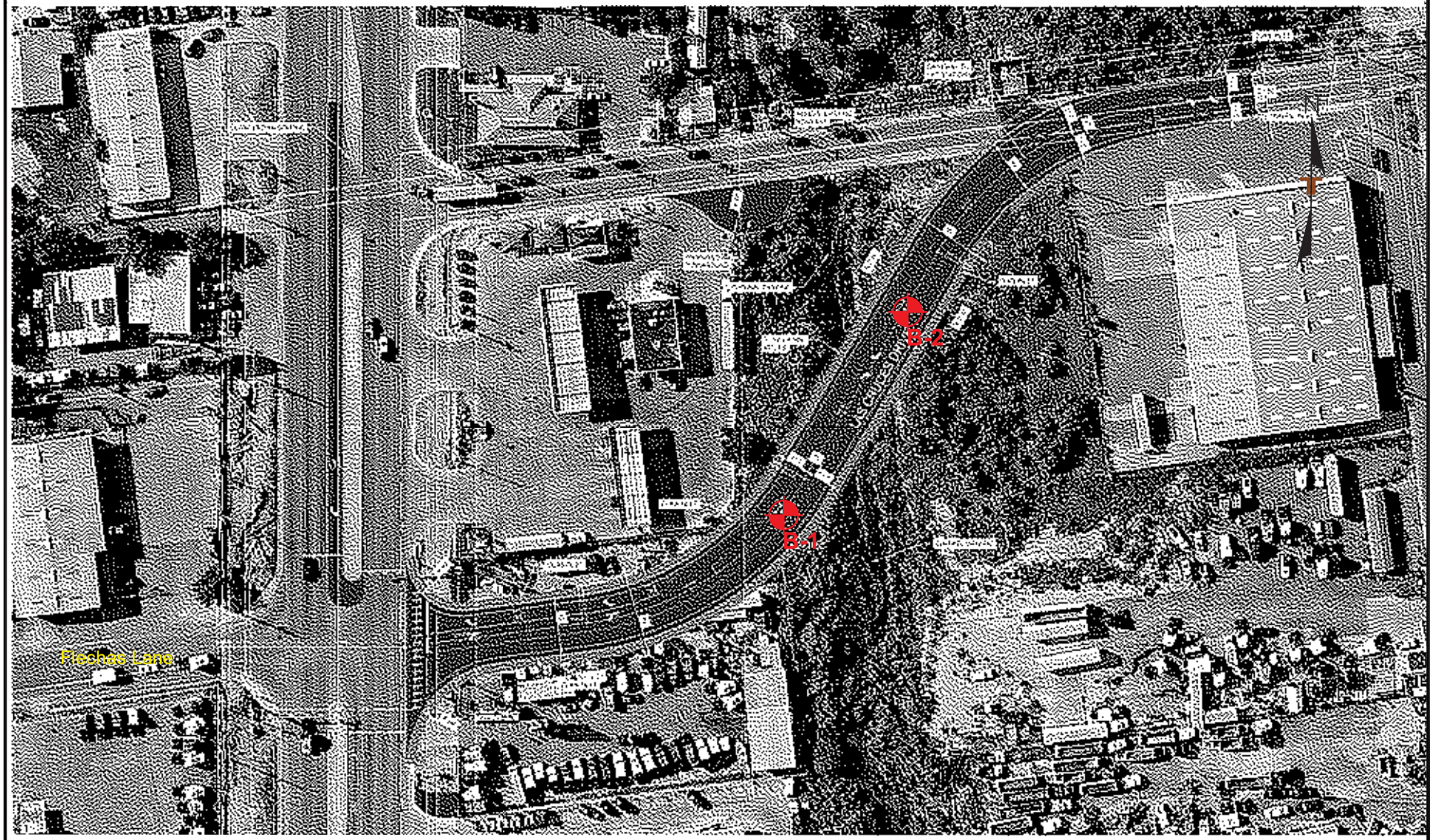

LEGEND:

- APPROXIMATE BORE LOCATION

Project Mngr:	MR
Drawn By:	LC
Checked By:	MR
Approved By:	MR

Project No.	89145003
Scale:	N.T.S.
File No.	89145003
Date:	02.10.2014

Terracon
Consulting Engineers and Scientists
615 GALE STREET, BUILDING B LAREDO, TX 78041
PH. (956) 729-1100 FAX. (956) 791-1071

BORE LOCATION PLAN

West Laredo Corridor, Phase II
Las Cruces Drive
Laredo, Texas

EXHIBIT

A-3

DRILLING LOG

WinCore	County	Webb	Hole	B-1	District	Laredo
Version 3.1	Highway	West Laredo Corridor, Ph.	Structure	Roadway Realignment	Date	1/29/2014
	CSJ	0922-33-076	Station	15+00	Grnd. Elev.	416.61 ft
			Offset		GW Elev.	410.61 ft

Elev. (ft)	LOG	Texas Cone Penetrometer	Strata Description	Triaxial Test Lateral Press. (psi)	Triaxial Test Deviator Stress (psi)	Properties MC	Properties LL	Properties PI	Properties Wet Den. (pcf)	Additional Remarks
			CLAY, very soft to soft, brown, sandy lean (CL)							
		3 (6) 4 (6)				16	34	19		(-) 200 = 60%; yellowish brown
5		2 (6) 4 (6)				19	33	18		
409.1		3 (6) 3 (6)				18				
			SAND, loose to dense, yellowish brown, clayey (SC)							
10		6 (6) 8 (6)				19				(-) 200 = 47%
15		50 (4) 50 (1)				18	32	13		strong cementation below 15 ft
396.6 20		50 (3) 50 (1)				18				
			SHALE, hard, bluish gray, sandy, strong cementation							
25		50 (1) 50 (1)					36	22		
30		50 (1) 50 (1)								(-) 200 = 45%
35		50 (1) 50 (1)					38	24		
376.6 40		50 (1) 50 (1)								

Remarks: Dry Augered from 0 to 40 feet. Groundwater was observed during and after drilling operations 403.61/410.61 ft.

Any ground water elevation information provided on this boring log is representative of conditions existing on the day and for the specific location where this information was collected. The actual groundwater elevation may fluctuate due to time, climatic conditions, and/or construction activity.

Driller: Alpha & Omega Logger: Jorge Rodriguez Organization: Terracon Consultants, Inc.

DRILLING LOG

WinCore	County	Webb	Hole	B-2	District	Laredo
Version 3.1	Highway	West Laredo Corridor, Ph. I	Structure	Roadway Realignment	Date	1/29/2014
	CSJ	0922-33-076	Station	17+00	Grnd. Elev.	417.40 ft
			Offset		GW Elev.	412.40 ft

Elev. (ft)	LOG	Texas Cone Penetrometer	Strata Description	Triaxial Test Lateral Press. (psi)	Triaxial Test Deviator Stress (psi)	Properties MC	Properties LL	Properties PI	Properties Wet Den. (pcf)	Additional Remarks
			SAND, very loose to slightly compact, brown, clayey (SC)							
		7 (6) 6 (6)				13	25	7		(-) 200 = 46%; with silt
5		3 (6) 2 (6)					28	11		
		2 (6) 2 (6)								(-) 200 = 24%; gravel at 7 ft.
10		11 (6) 19 (6)				18				
402.4 15		50 (3) 50 (2)				12	35	18		
			SHALE, hard, bluish gray, strong cementation							
20		50 (3) 50 (1)				19				(-) 200 = 56%
25		50 (1) 50 (1)				18	34	18		
30		50 (2) 50 (1)				18				(-) 200 = 61%
35		50 (1) 50 (0)					28	12		
377.4 40		50 (1) 50 (0)								

Remarks: Dry Augered from 0 to 40 feet. Groundwater was observed during and after drilling operations 409.40/412.40 ft.

Any ground water elevation information provided on this boring log is representative of conditions existing on the day and for the specific location where this information was collected. The actual groundwater elevation may fluctuate due to time, climatic conditions, and/or construction activity.

Driller: Alpha & Omega Logger: Jorge Rodriguez Organization: Terracon Consultants, Inc.

SOIL STRENGTH ANALYSIS

WinCore
Version 3.1

County	Webb	Hole	B-1	District	Laredo
Highway	West Laredo Corridor, Ph. I	Structure	Roadway Realignment	Date	1/29/2014
Control	0922-33-076	Station	15+00	Grnd. Elev.	416.61 ft
		Offset		GW Elev.	403.61 ft

TCP Capacity Values Used

Soil reduction factor of 0.7 applied

Strata No.	Elev. (Feet) From	To	Design Type	Soil Factor	TCP N Value	TCP Unit Friction (TSF)	Accumulative Friction (T/F)
1	416.6	412.4	CL	60	7	0.08	0.35
1	412.4	409.1	CL	60	6	0.07	0.57
2	409.1	407.4	SC	70	6	0.06	0.68
2	407.4	403.6	SC	70	14	0.14	1.20
2	403.6	396.6	SC	70	240	1.35	10.65
3	396.6	393.6	OTHER	80	300	1.69	15.71
3	393.6	388.6	OTHER	80	600	3.25	31.96
3	388.6	383.6	OTHER	80	600	3.25	48.21
3	383.6	379.1	OTHER	80	600	3.25	62.84
3	379.1	376.6	OTHER	80	600	3.25	70.96

SKIN FRICTION DESIGN

WinCore
Version 3.1

County	Webb	Hole	B-1	District	Laredo
Highway	West Laredo Corridor, Ph.	Structure	Roadway Realignment	Date	1/29/2014
Control	0922-33-076	Station	15+00	Grnd. Elev.	416.61 ft
		Offset		GW Elev.	493.61 ft

Drilled Shaft Design: Soil Reduction Factor = 0.7

TCP Friction Values Used

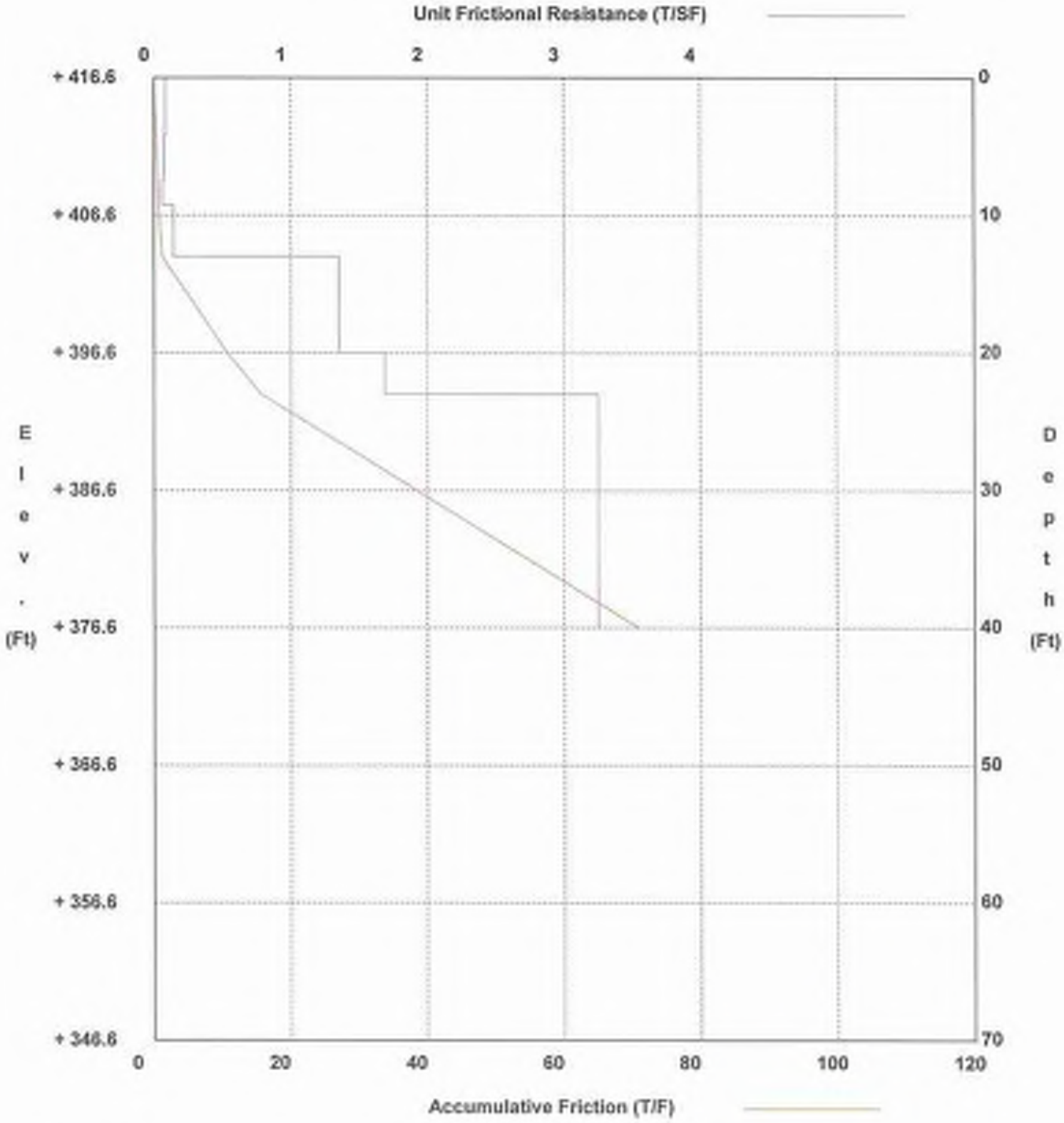

N:\PROJECTS\2014\89145003\Working Files\Laboratory-Field Data-Boring Logs\WinCore\89145003A.CLG

POINT BEARING DESIGN

WinCore
Version 3.1

County	Webb	Hole	B-1	District	Laredo
Highway	West Laredo Corridor, Ph. I	Structure	Roadway Realignment	Date	1/29/2014
Control	0922-33-076	Station	15+00	Grnd. Elev.	416.61 ft
		Offset		GW Elev.	403.61 ft

Diameters Below Tip Checked = 2

TCP Bearing Values Used

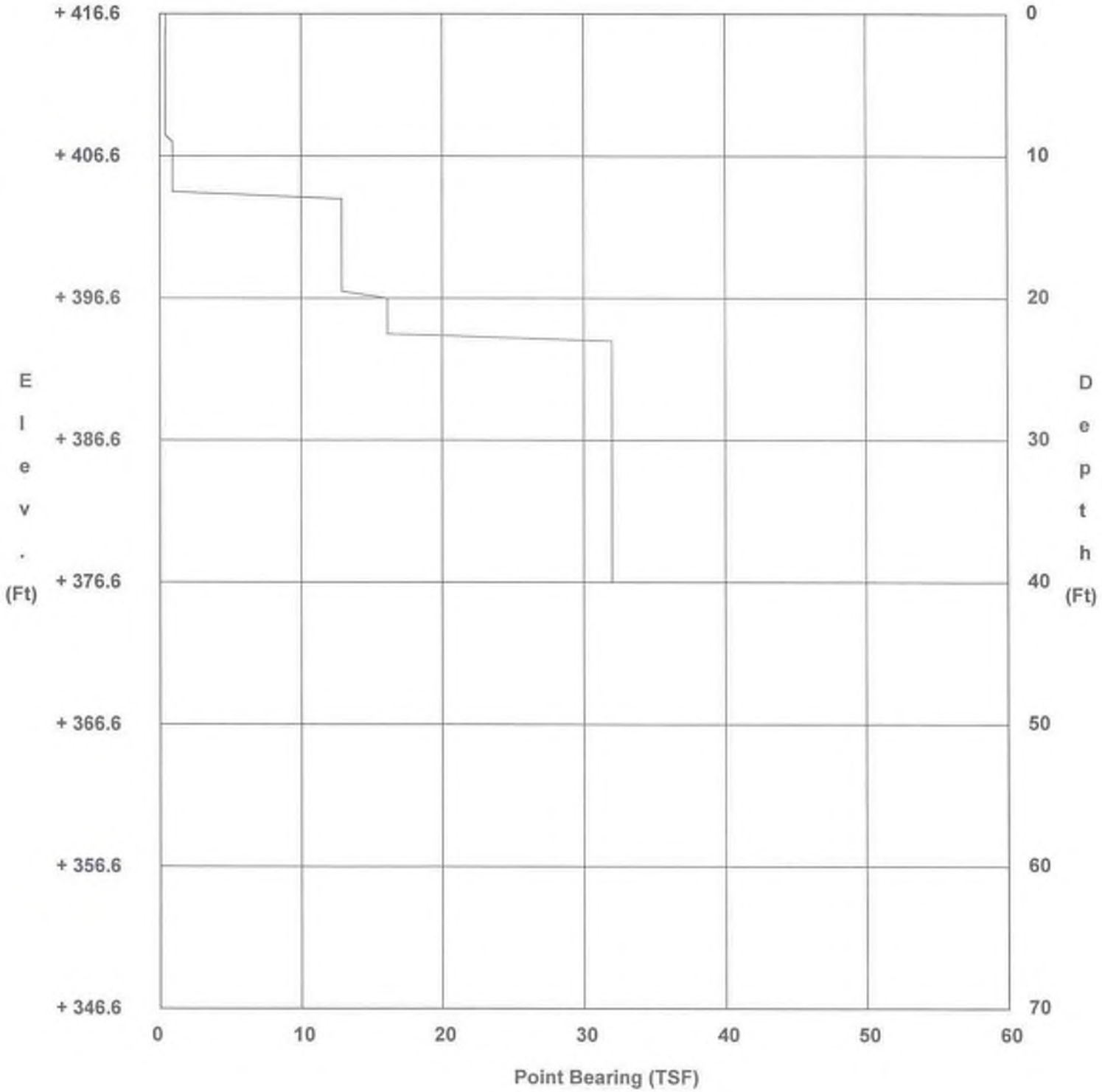

N:\PROJECTS\2014\89145003\Working Files\Laboratory-Field Data-Boring Logs\WinCore\89145003A.CLG

FOUNDATION CAPACITY

WinCore
Version 3.1

County	Webb	Hole	B-1	District	Laredo
Highway	West Laredo Corridor, Ph.	Structure	Roadway Realignment	Date	1/23/2014
Control	0922-33-076	Station	15+00	Grnd. Elev.	416.61 ft
		Offset		GW Elev.	403.61 ft

16 inch Drilled Shaft
75 ton Design Load
Tip Elevation = + 395.11

+416.61 Top Hole Elevation
+406.61 Disregard Elevation

Disregard above hard strata disabled
Pb: 2 Diameters Below Tip Checked
TCP Capacity Values Used
0.7 Soil Reduction Factor Used

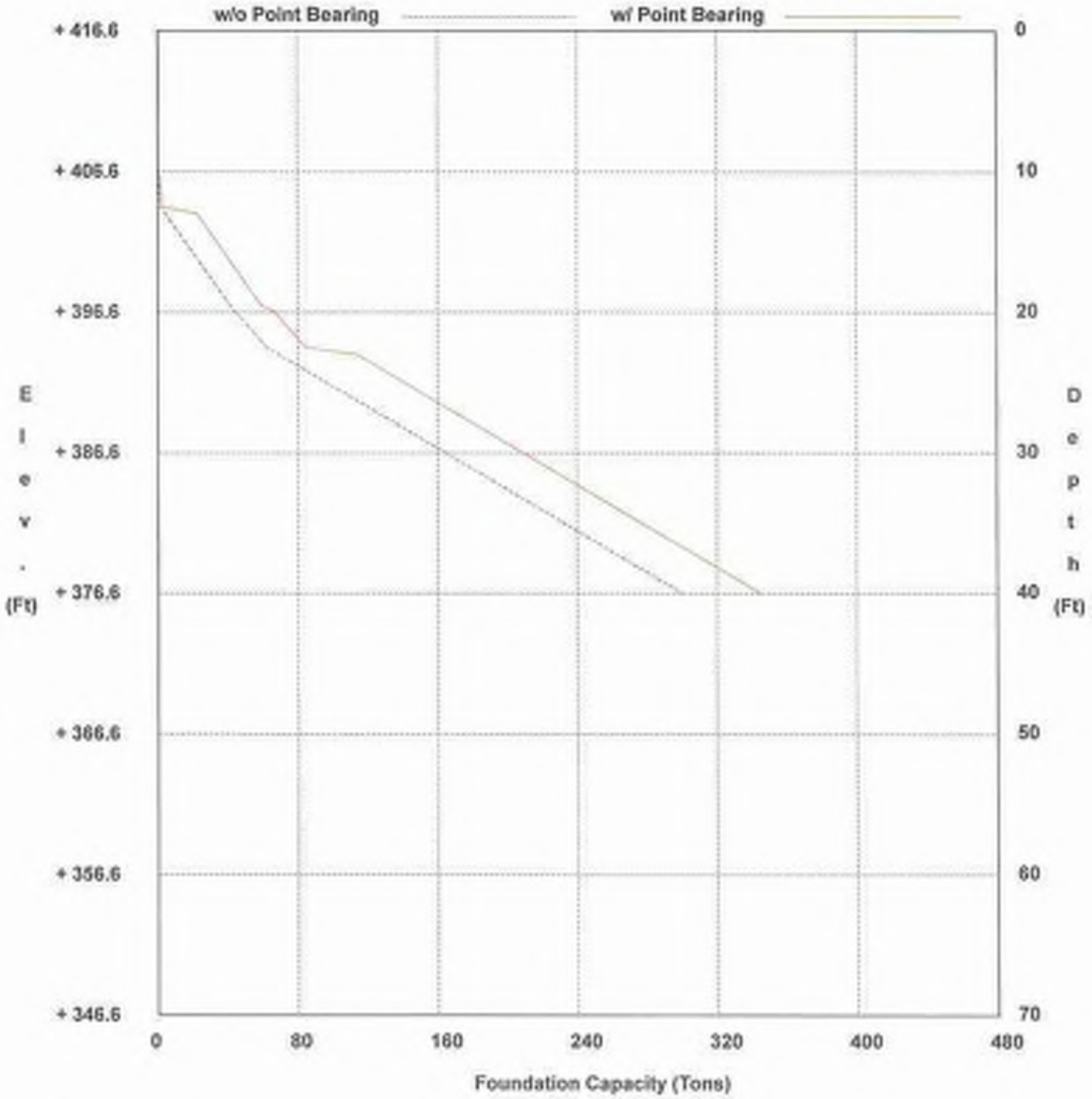

N:\PROJECT\2014\80145003\Working Files\Laboratory-Field Data\Boring Logs\WinCore\80145003A.CLG

SOIL STRENGTH ANALYSIS

WinCore
Version 3.1

County	Webb	Hole	B-2	District	Laredo
Highway	West Laredo Corridor, Ph. I	Structure	Roadway Realignment	Date	1/29/2014
Control	0922-33-076	Station	17+00	Grnd. Elev.	417.40 ft
		Offset		GW Elev.	409.40 ft

TCP Capacity Values Used

Soil reduction factor of 0.7 applied

Strata No.	Elev. (Feet) From	To	Design Type	Soil Factor	TCP N Value	TCP Unit Friction (TSF)	Accumulative Friction (T/F)
1	417.4	413.2	SC	70	13	0.13	0.55
1	413.2	410.7	SC	70	5	0.05	0.68
1	410.7	408.2	SC	70	4	0.04	0.78
1	408.2	402.4	SC	70	30	0.30	2.50
2	402.4	399.4	OTHER	80	240	1.35	6.55
2	399.4	394.4	OTHER	80	300	1.69	14.99
2	394.4	389.4	OTHER	80	600	3.25	31.24
2	389.4	384.4	OTHER	80	400	2.25	42.48
2	384.4	379.9	OTHER	80	1200	3.25	57.11
2	379.9	377.4	OTHER	80	1200	3.25	65.23

SKIN FRICTION DESIGN

WinCore
Version 3.1

County	Webb	Hole	B-2	District	Laredo
Highway	West Laredo Corridor, Ph.	Structure	Roadway Realignment	Date	1/28/2014
Control	0922-33-076	Station	17+50	Grnd. Elev.	417.40 ft
		Offset		GW Elev.	409.40 ft

Drilled Shaft Design: Soil Reduction Factor = 0.7

TCP Friction Values Used

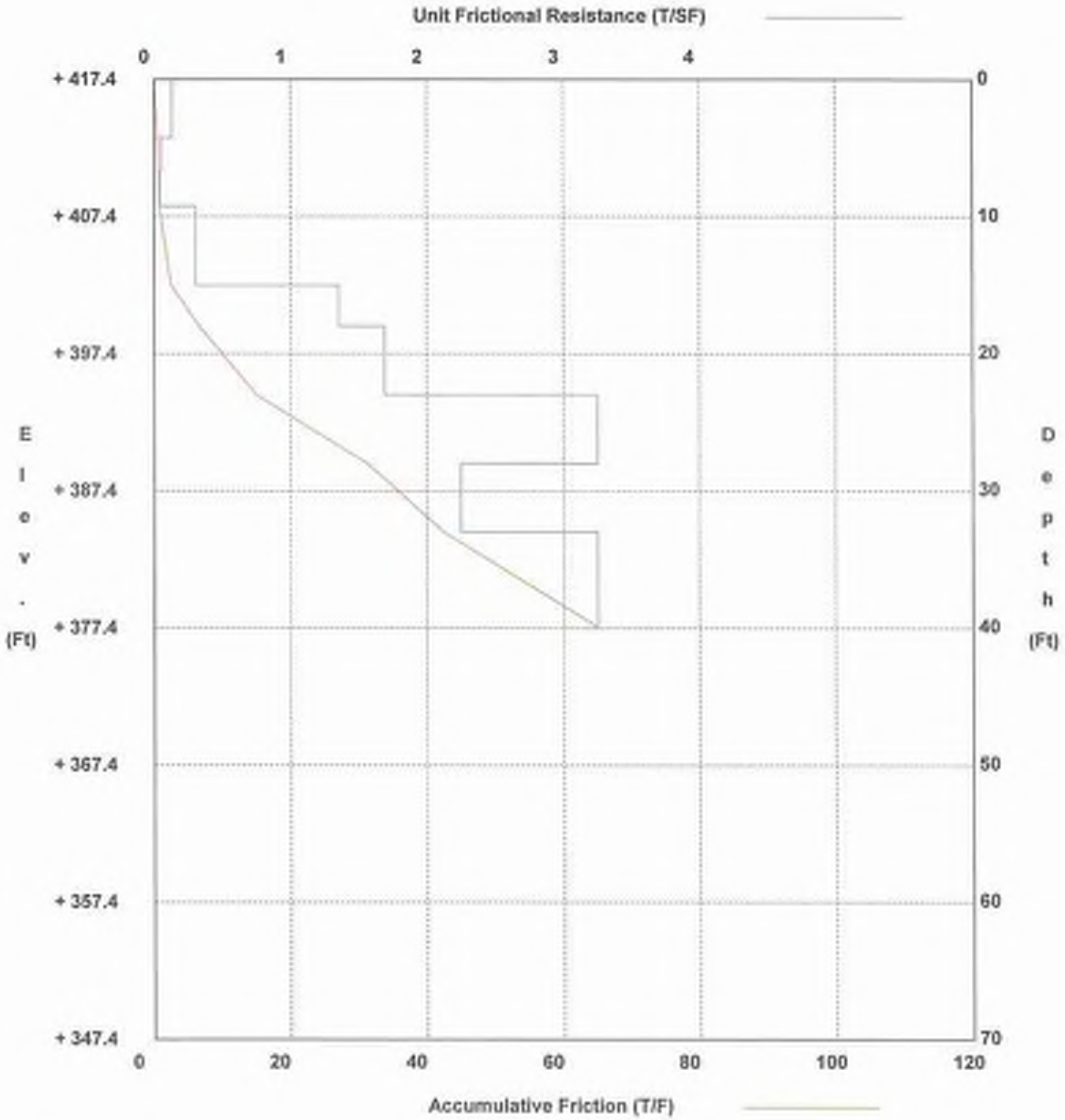

N:\PROJECTS\2014\89145003\Working Files\Laboratory-Field Data-Boring Logs\WinCore\89145003A.GLG

POINT BEARING DESIGN

WinCore
Version 3.1

County	Webb	Hole	B-2	District	Laredo
Highway	West Laredo Corridor, Ph. I	Structure	Roadway Realignment	Date	1/29/2014
Control	0922-33-076	Station	17+00	Grnd. Elev.	417.40 ft
		Offset		GW Elev.	409.40 ft

Diameters Below Tip Checked = 2

TCP Bearing Values Used

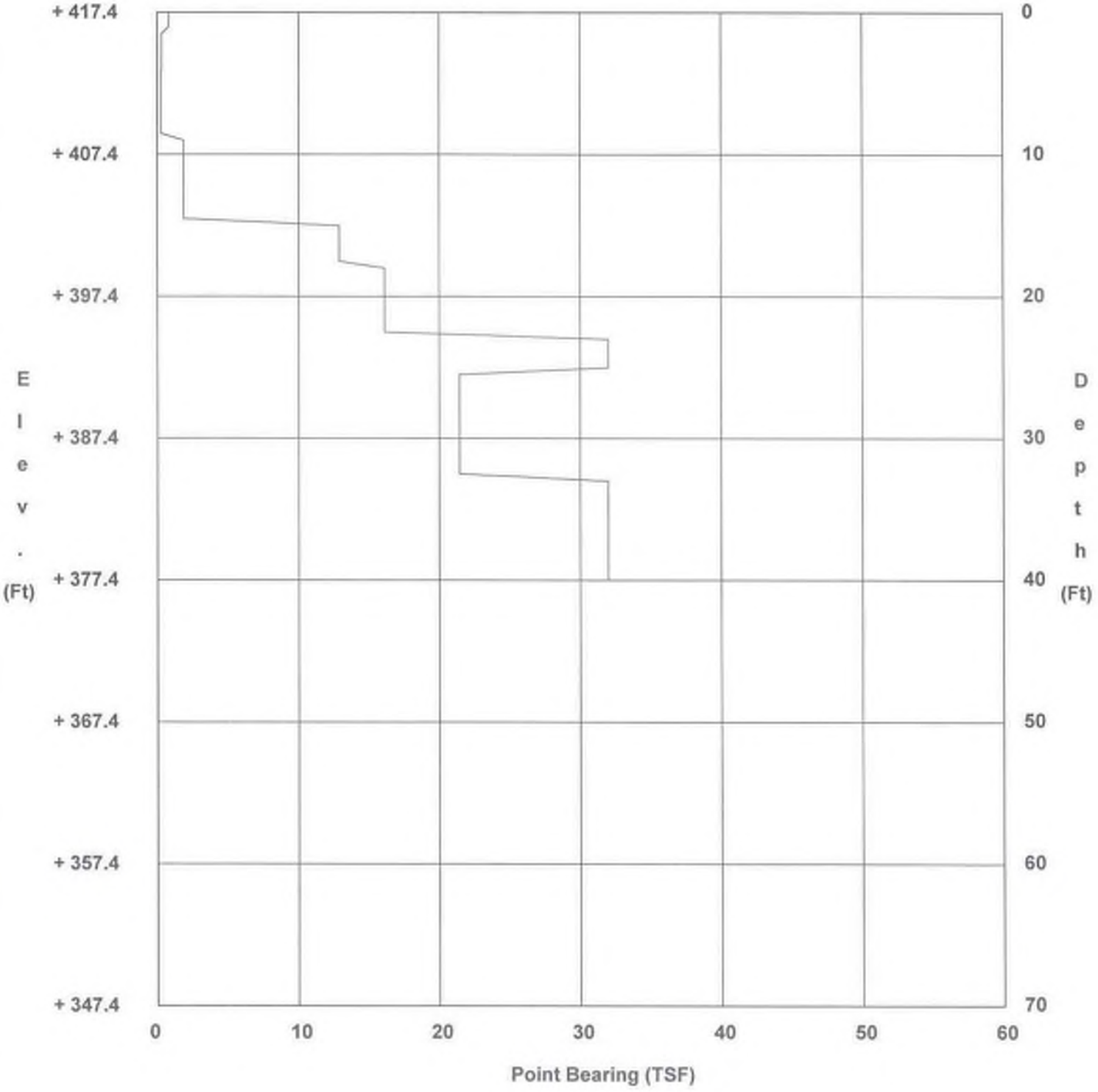

N:\PROJECTS\2014\89145003\Working Files\Laboratory-Field Data-Boring Logs\WinCore\89145003A.CLG

FOUNDATION CAPACITY

WinCore
Version 3.1

County	Webb	Hole	B-2	District	Laredo
Highway	West Laredo Corridor, Ph.	Structure	Roadway Realignment	Date	1/28/2014
Control	0922-33-076	Station	17+00	Grnd. Elev.	417.40 ft
		Offset		GW Elev.	409.40 ft

18 inch Drilled Shaft
75 ton Design Load
Tip Elevation = + 395.4

+417.40 Top Hole Elevation
+407.4 Disregard Elevation

Disregard above hard strata disabled
Pb: 2 Diameters Below Tip Checked
TCP Capacity Values Used
0.7 Soil Reduction Factor Used

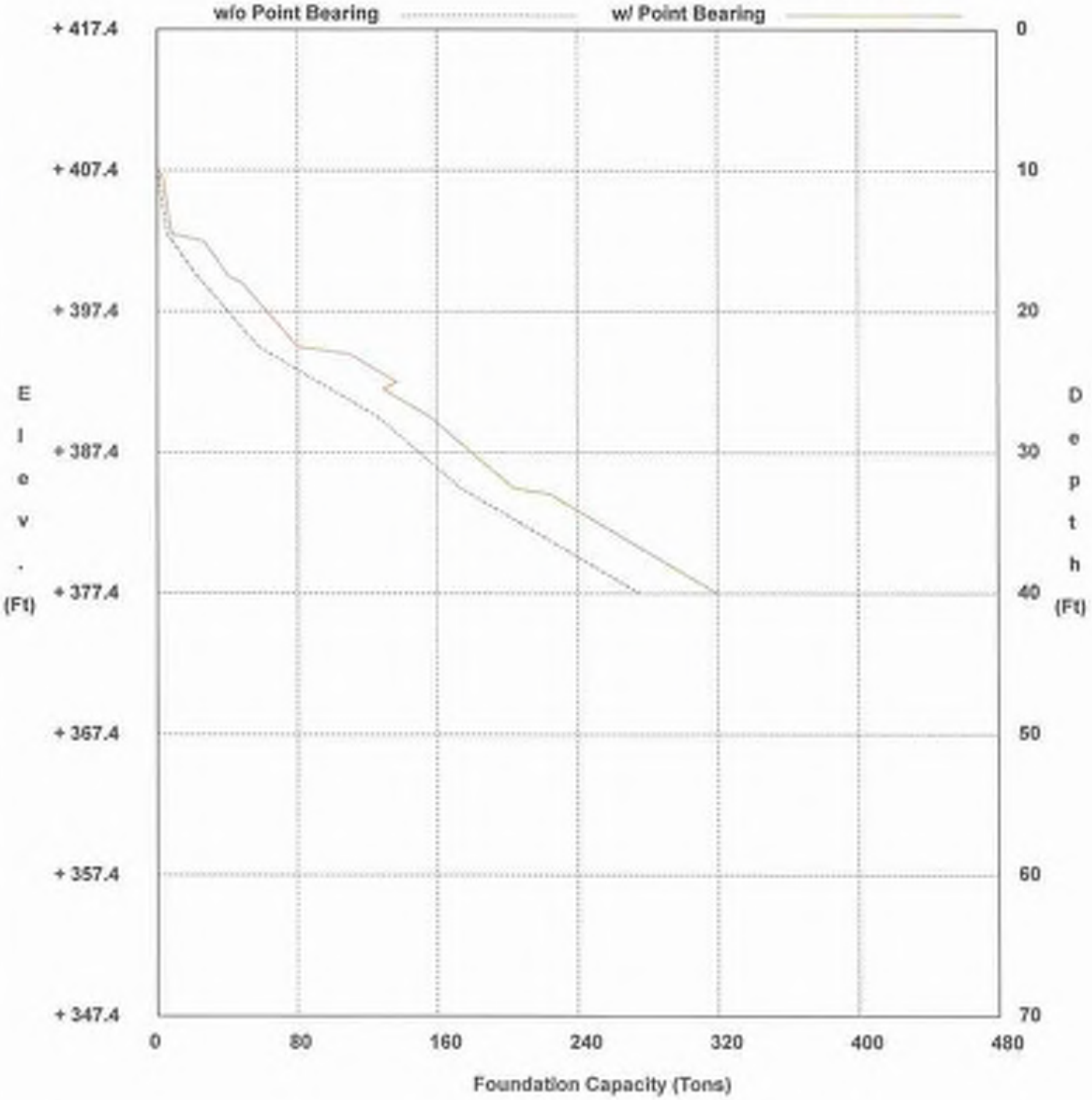

N:\PROJECTS\2014\8914503\Working Files\Laboratory-Field Data-Boring Logs\WinCore\8914503A.GLG

Terracon
Consulting Engineers & Scientists

DCP TEST DATA

Project: West Laredo Corridor, Phase II
Location: B-1
Date: 1/22/2014
Soil Type(s): Low plasticity Clay with CBR<10

Hammer
- ○ 10.1 lbs.
- ◉ 17.6 lbs.
- ○ Both hammers used

Soil Type
- ○ CH
- ◉ CL
- ○ All other soils

No. of Blows	Accumulative Penetration	Type of Hammer
0	0	1
1	55	1
1	85	1
1	125	1
1	160	1
1	200	1
1	235	1
1	270	1
2	300	1
1	340	1
1	370	1
2	425	1
1	455	1
1	490	1
1	530	1
1	565	1
1	605	1
1	655	1
1	705	1
1	745	1

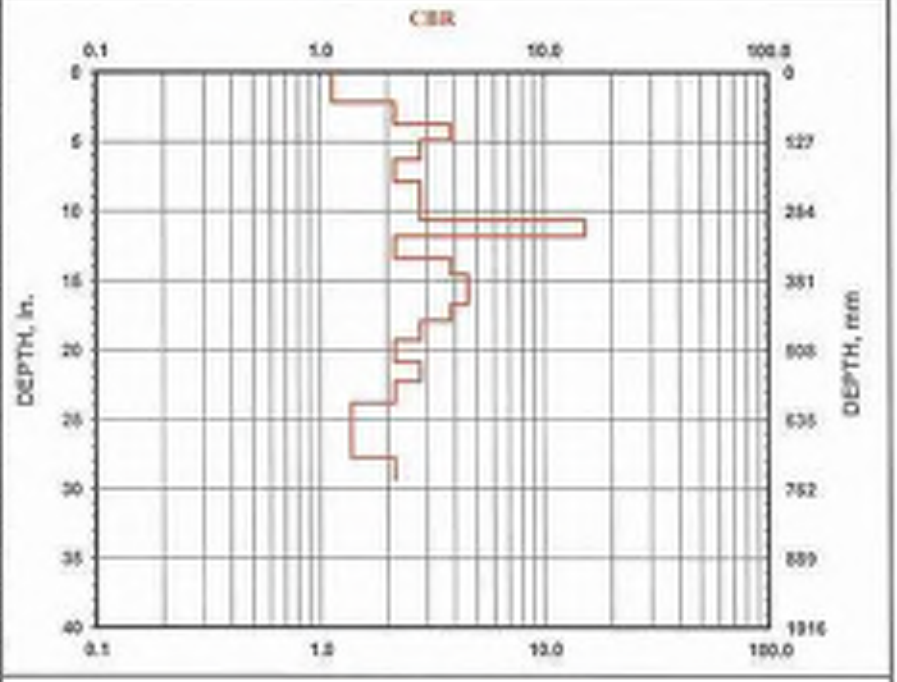

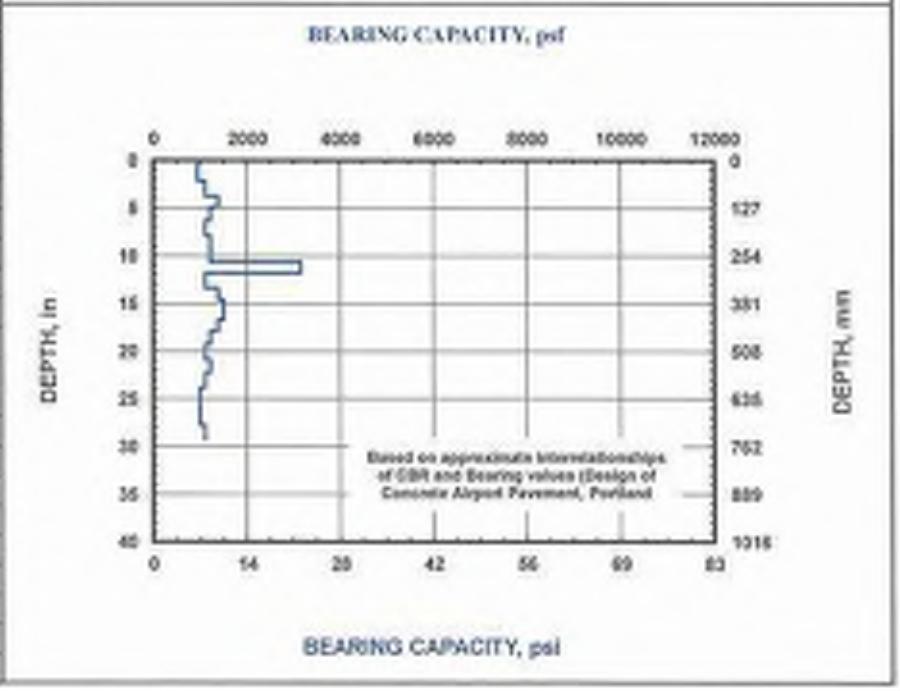

Terracon

DCP TEST DATA

Project: West Laredo Corridor, Phase II
Location: B-2
Date: 1/22/2014
Soil Type(s): Clayey Sand (SC)

Hammer
- ○ 10.1 lbs.
- ◉ 17.6 lbs.
- ○ Both hammers used

Soil Type
- ○ CH
- ○ CL
- ◉ All other soils

No. of Blows	Accumulative Penetration	Type of Hammer
0	0	1
1	30	1
2	65	1
2	105	1
2	145	1
2	185	1
2	225	1
2	280	1
2	315	1
2	355	1
2	415	1
2	450	1
3	490	1
3	540	1
2	575	1
3	615	1
3	660	1
3	705	1
3	745	1

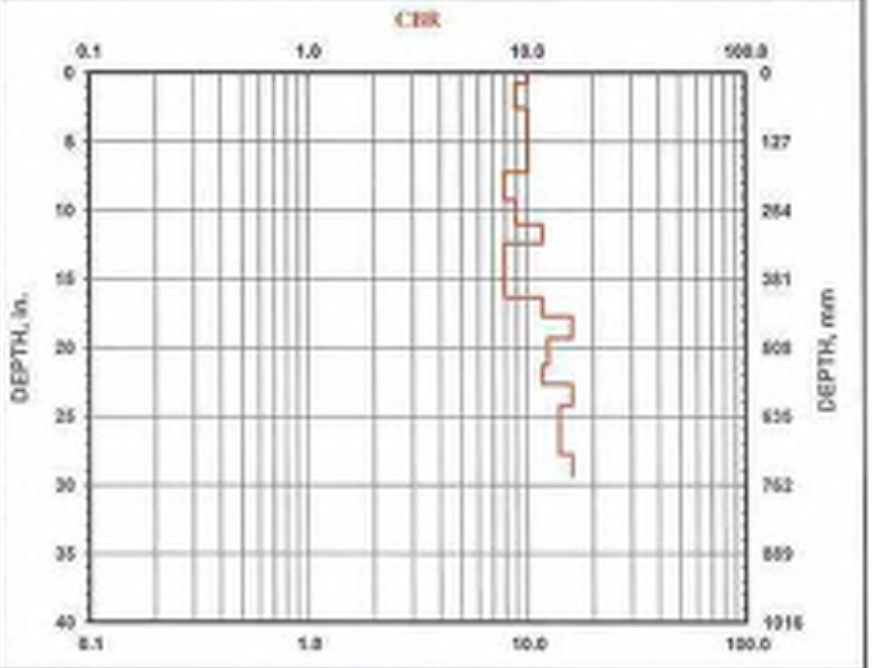

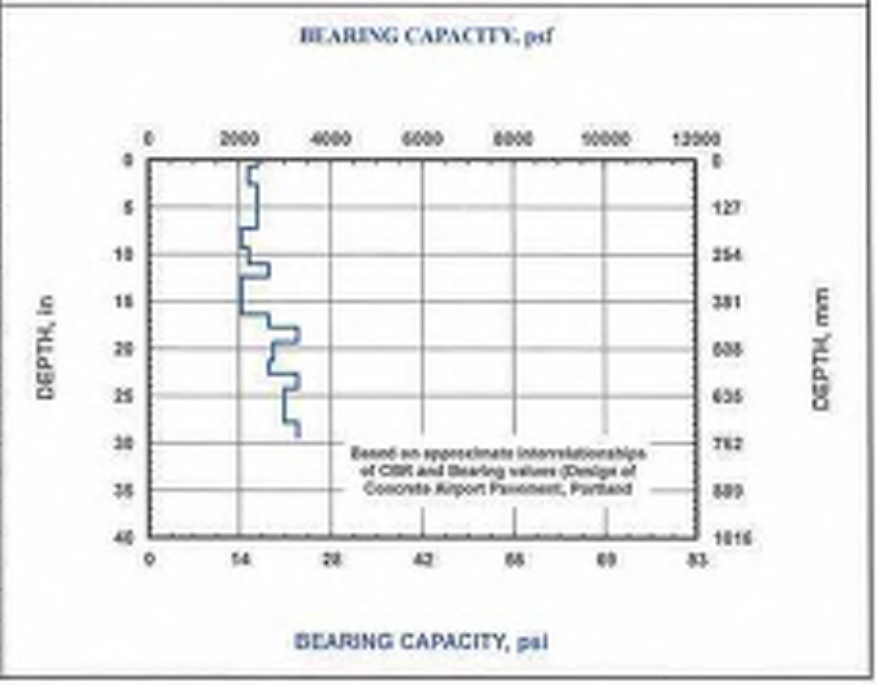

APPENDIX B

LABORATORY TESTING

LABORATORY TESTING

Samples retrieved during the field exploration were taken to the laboratory for further observation by the project geotechnical engineer and were classified in accordance with the Unified Soil Classification System (USCS) described in this Appendix. At that time, the field descriptions were confirmed or modified as necessary and an applicable laboratory testing program was formulated to determine engineering properties of the subsurface materials.

Laboratory tests were conducted on selected soil samples and the test results are presented in this appendix. The laboratory test results were used for the geotechnical engineering analyses, and the development of foundation and earthwork recommendations. Laboratory tests were performed in general accordance with the applicable ASTM, local or other accepted standards.

Selected soil samples obtained from the site were tested for the following engineering properties:

- In-situ Water Content
- Atterberg Limits
- Amount of Material In-Soil Finer than the Nº 200 Mesh (75-µm) Sieve
- Sulfate concentration (colorimetric method)

Sample Disposal

All samples were returned to our laboratory. The samples not tested in the laboratory will be stored for a period of 30 days subsequent to submittal of this report and will be discarded after this period, unless other arrangements are made prior to the disposal period.

GRAIN SIZE DISTRIBUTION

ASTM D422

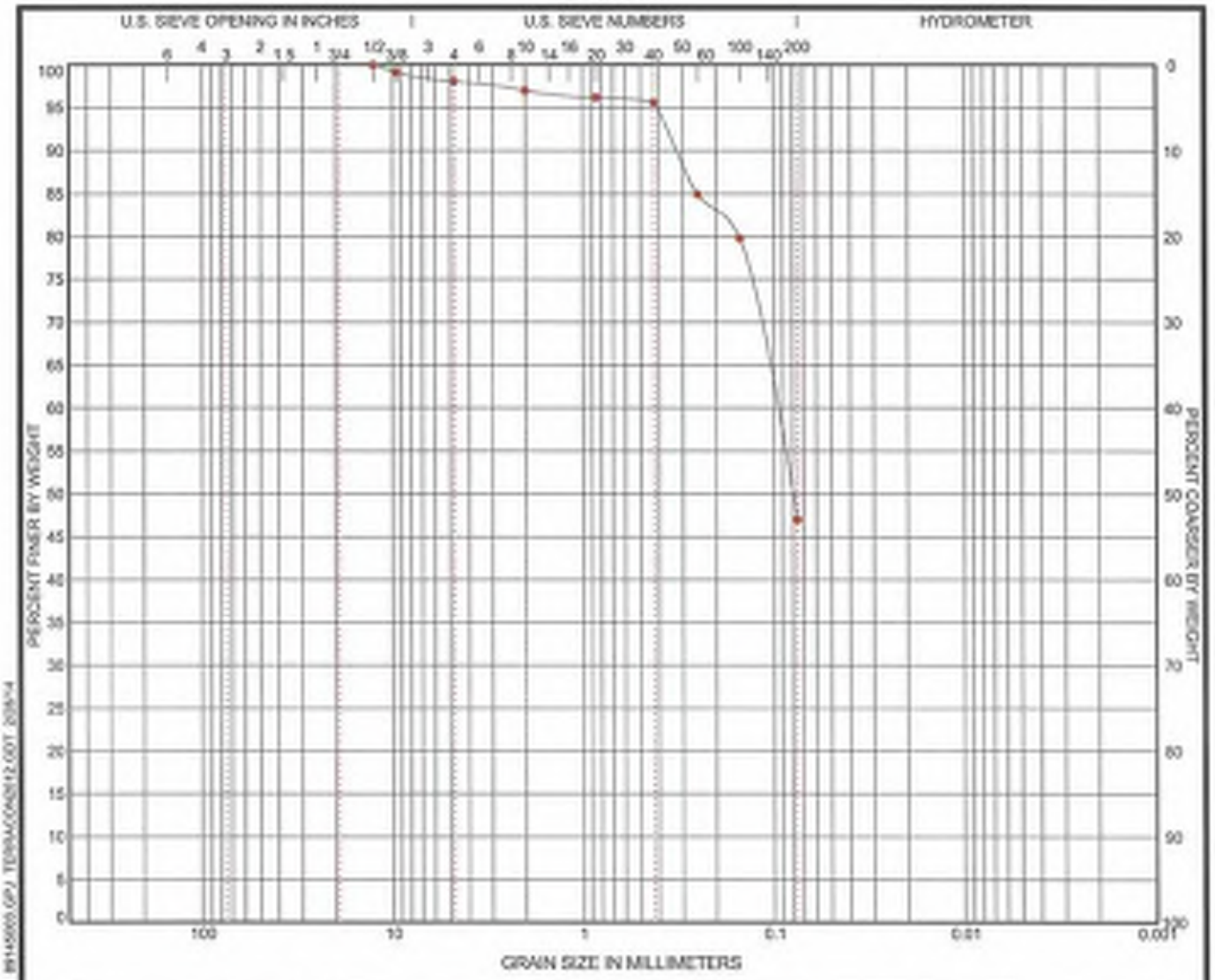

COBBLES	GRAVEL		SAND			SILT OR CLAY
	coarse	fine	coarse	medium	fine	

	BORING ID	DEPTH	% COBBLES	% GRAVEL	% SAND	% SILT	% FINES	% CLAY	USCS
●	Creek	1	0.0	1.9	51.0		47.0		SC

	GRAIN SIZE		
	●		
D_{60}	0.099		
D_{30}			
D_{10}			
	COEFFICIENTS		
C_c			
C_u			

SIEVE (size)	PERCENT FINER ●		
1 1/2"			
1"			
3/4"			
1/2"	100.0		
3/8"	99.13		
#4	98.07		
#10	96.98		
#20	96.2		
#40	95.63		
#60	94.93		
#100	79.8		
#200	47.02		

SOIL DESCRIPTION

● Clayey Sand

REMARKS

● Grab sample from the stream bank.

PROJECT: West Laredo Corridor, Phase II

SITE: Realignment of Las Cruces Drive
Laredo, Texas

Terracon
615 Gale Street, Building B
Laredo, Texas

PROJECT NUMBER: 89145003

CLIENT: Civil Engineering Consultants, Inc.
Laredo, Texas

EXHIBIT: B-2

LABORATORY TESTING ARE NOT VALID IF SEPARATED FROM ORIGINAL REPORT. GRAIN SIZE USCS 1 89145003.GPJ TERRACONSH12.GDT 2015/7/4

APPENDIX C

SUPPORTING DOCUMENTS

GENERAL NOTES

DESCRIPTION OF SYMBOLS AND ABBREVIATIONS

SAMPLING

Auger	Split Spoon
Shelby Tube	Macro Core
Ring Sampler	Rock Core
Grab Sample	No Recovery

WATER LEVEL

- Water Initially Encountered
- Water Level After a Specified Period of Time
- Water Level After a Specified Period of Time

Water levels indicated on the soil boring logs are the levels measured in the borehole at the times indicated. Groundwater level variations will occur over time. In low permeability soils, accurate determination of groundwater levels is not possible with short term water level observations.

FIELD TESTS

(HP)	Hand Penetrometer
(T)	Torvane
(b/f)	Standard Penetration Test (blows per foot)
(PID)	Photo-Ionization Detector
(OVA)	Organic Vapor Analyzer

DESCRIPTIVE SOIL CLASSIFICATION

Soil classification is based on the Unified Soil Classification System. Coarse Grained Soils have more than 50% of their dry weight retained on a #200 sieve; their principal descriptors are: boulders, cobbles, gravel or sand. Fine Grained Soils have less than 50% of their dry weight retained on a #200 sieve; they are principally described as clays if they are plastic, and silts if they are slightly plastic or non-plastic. Major constituents may be added as modifiers and minor constituents may be added according to the relative proportions based on grain size. In addition to gradation, coarse-grained soils are defined on the basis of their in-place relative density and fine-grained soils on the basis of their consistency.

LOCATION AND ELEVATION NOTES

Unless otherwise noted, Latitude and Longitude are approximately determined using a hand-held GPS device. The accuracy of such devices is variable. Surface elevation data annotated with +/- indicates that no actual topographical survey was conducted to confirm the surface elevation. Instead, the surface elevation was approximately determined from topographic maps of the area.

STRENGTH TERMS

RELATIVE DENSITY OF COARSE-GRAINED SOILS (More than 50% retained on No. 200 sieve.) Density determined by Standard Penetration Resistance Includes gravels, sands and silts.			CONSISTENCY OF FINE-GRAINED SOILS (50% or more passing the No. 200 sieve.) Consistency determined by laboratory shear strength testing, field visual-manual procedures or standard penetration resistance			
Descriptive Term (Density)	Standard Penetration or N-Value Blows/Ft.	Ring Sampler Blows/Ft.	Descriptive Term (Consistency)	Unconfined Compressive Strength, Qu, tsf	Standard Penetration or N-Value Blows/Ft.	Ring Sampler Blows/Ft.
Very Loose	0 - 3	0 - 6	Very Soft	less than 0.25	0 - 1	< 3
Loose	4 - 9	7 - 18	Soft	0.25 to 0.50	2 - 4	3 - 4
Medium Dense	10 - 29	19 - 58	Medium-Stiff	0.50 to 1.00	4 - 8	5 - 9
Dense	30 - 50	59 - 98	Stiff	1.00 to 2.00	8 - 15	10 - 18
Very Dense	> 50	≥ 99	Very Stiff	2.00 to 4.00	15 - 30	19 - 42
			Hard	> 4.00	> 30	> 42

RELATIVE PROPORTIONS OF SAND AND GRAVEL

Descriptive Term(s) of other constituents	Percent of Dry Weight
Trace	< 15
With	15 - 29
Modifier	> 30

GRAIN SIZE TERMINOLOGY

Major Component of Sample	Particle Size
Boulders	Over 12 in. (300 mm)
Cobbles	12 in. to 3 in. (300mm to 75mm)
Gravel	3 in. to #4 sieve (75mm to 4.75 mm)
Sand	#4 to #200 sieve (4.75mm to 0.075mm
Silt or Clay	Passing #200 sieve (0.075mm)

RELATIVE PROPORTIONS OF FINES

Descriptive Term(s) of other constituents	Percent of Dry Weight
Trace	< 5
With	5 - 12
Modifier	> 12

PLASTICITY DESCRIPTION

Term	Plasticity Index
Non-plastic	0
Low	1 - 10
Medium	11 - 30
High	> 30

Terracon

UNIFIED SOIL CLASSIFICATION SYSTEM

Criteria for Assigning Group Symbols and Group Names Using Laboratory Tests [A]					Soil Classification	
					Group Symbol	Group Name [B]
Coarse Grained Soils: More than 50% retained on No. 200 sieve	**Gravels:** More than 50% of coarse fraction retained on No. 4 sieve	**Clean Gravels:** Less than 5% fines [C]	$Cu \geq 4$ and $1 \leq Cc \leq 3$ [E]		GW	Well-graded gravel [F]
			$Cu < 4$ and/or $1 > Cc > 3$ [E]		GP	Poorly graded gravel [F]
		Gravels with Fines: More than 12% fines [C]	Fines classify as ML or MH		GM	Silty gravel [F,G,H]
			Fines classify as CL or CH		GC	Clayey gravel [F,G,H]
	Sands: 50% or more of coarse fraction passes No. 4 sieve	**Clean Sands:** Less than 5% fines [D]	$Cu \geq 6$ and $1 \leq Cc \leq 3$ [E]		SW	Well-graded sand [I]
			$Cu < 6$ and/or $1 > Cc > 3$ [E]		SP	Poorly graded sand [I]
		Sands with Fines: More than 12% fines [D]	Fines classify as ML or MH		SM	Silty sand [G,H,I]
			Fines classify as CL or CH		SC	Clayey sand [G,H,I]
Fine-Grained Soils: 50% or more passes the No. 200 sieve	**Silts and Clays:** Liquid limit less than 50	**Inorganic:**	PI > 7 and plots on or above "A" line [J]		CL	Lean clay [K,L,M]
			PI < 4 or plots below "A" line [J]		ML	Silt [K,L,M]
		Organic:	Liquid limit - oven dried	< 0.75	OL	Organic clay [K,L,M,N]
			Liquid limit - not dried			Organic silt [K,L,M,O]
	Silts and Clays: Liquid limit 50 or more	**Inorganic:**	PI plots on or above "A" line		CH	Fat clay [K,L,M]
			PI plots below "A" line		MH	Elastic Silt [K,L,M]
		Organic:	Liquid limit - oven dried	< 0.75	OH	Organic clay [K,L,M,P]
			Liquid limit - not dried			Organic silt [K,L,M,Q]
Highly organic soils:	Primarily organic matter, dark in color, and organic odor				PT	Peat

[A] Based on the material passing the 3-inch (75-mm) sieve
[B] If field sample contained cobbles or boulders, or both, add "with cobbles or boulders, or both" to group name.
[C] Gravels with 5 to 12% fines require dual symbols: GW-GM well-graded gravel with silt, GW-GC well-graded gravel with clay, GP-GM poorly graded gravel with silt, GP-GC poorly graded gravel with clay.
[D] Sands with 5 to 12% fines require dual symbols: SW-SM well-graded sand with silt, SW-SC well-graded sand with clay, SP-SM poorly graded sand with silt, SP-SC poorly graded sand with clay

[E] $Cu = D_{60}/D_{10}$ $\quad Cc = \dfrac{(D_{30})^2}{D_{10} \times D_{60}}$

[F] If soil contains ≥ 15% sand, add "with sand" to group name.
[G] If fines classify as CL-ML, use dual symbol GC-GM, or SC-SM.
[H] If fines are organic, add "with organic fines" to group name.
[I] If soil contains ≥ 15% gravel, add "with gravel" to group name.
[J] If Atterberg limits plot in shaded area, soil is a CL-ML, silty clay.
[K] If soil contains 15 to 29% plus No. 200, add "with sand" or "with gravel," whichever is predominant.
[L] If soil contains ≥ 30% plus No. 200 predominantly sand, add "sandy" to group name.
[M] If soil contains ≥ 30% plus No. 200, predominantly gravel, add "gravelly" to group name.
[N] PI ≥ 4 and plots on or above "A" line.
[O] PI < 4 or plots below "A" line.
[P] PI plots on or above "A" line.
[Q] PI plots below "A" line.

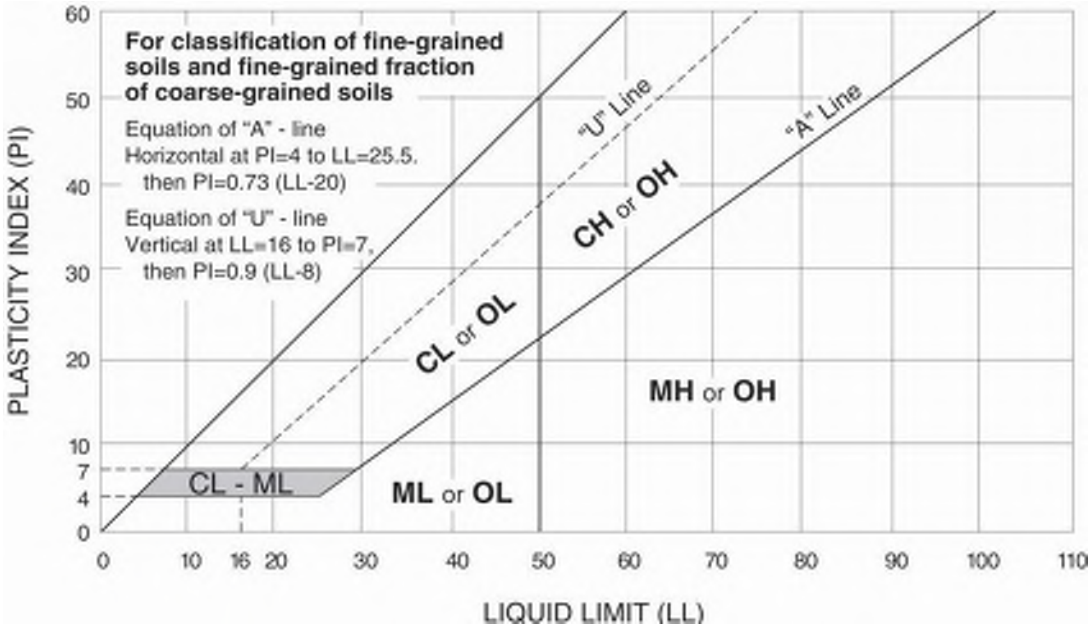

Texas Department of Transportation

TEXAS DEPARTMENT OF TRANSPORTATION

F P S21-1.3 — FLEXIBLE PAVEMENT SYSTEM — Release:12-7-2012

PAVEMENT DESIGN TYPE #4 -- ACP + ASPH STAB BASE + FLEX BASE OVER SUBGRADE

BROB	DIST.-22	COUNTY-240	CONT.	SECT.	JOB	HIGHWAY	DATE	PAGE
000	Laredo	WEBB	0922	33	076	Las Cruces	3/17/2014	1

COMMENTS ABOUT THIS PROBLEM

FHR design of IH 35
Use cement stabilized subbase
Traffic 2 million

BASIC DESIGN CRITERIA

LENGTH OF THE ANALYSIS PERIOD (YEARS)	20.0
MINIMUM TIME TO FIRST OVERLAY (YEARS)	10.0
MINIMUM TIME BETWEEN OVERLAYS (YEARS)	3.0
DESIGN CONFIDENCE LEVEL (95.0%)	C
SERVICEABILITY INDEX OF THE INITIAL STRUCTURE	4.2
FINAL SERVICEABILITY INDEX P2	2.5
SERVICEABILITY INDEX P1 AFTER AN OVERLAY	4.2
DISTRICT TEMPERATURE CONSTANT	31.0
SUBGRADE ELASTIC MODULUS by COUNTY (ksi)	8.00
INTEREST RATE OR TIME VALUE OF MONEY (PERCENT)	7.0

PROGRAM CONTROLS AND CONSTRAINTS

NUMBER OF SUMMARY OUTPUT PAGES DESIRED (8 DESIGNS/PAGE)	3
MAX FUNDS AVAILABLE PER SQ.YD. FOR INITIAL DESIGN (DOLLARS)	99.00
MAXIMUM ALLOWED THICKNESS OF INITIAL CONSTRUCTION (INCHES)	69.0
ACCUMULATED MAX DEPTH OF ALL OVERLAYS (INCHES) (EXCLUDING LEVEL-UP)	6.0

TRAFFIC DATA

ADT AT BEGINNING OF ANALYSIS PERIOD (VEHICLES/DAY)	14300.
ADT AT END OF TWENTY YEARS (VEHICLES/DAY)	20000.
ONE-DIRECTION 20YEAR 18 kip ESAL (millions)	3.700
AVERAGE APPROACH SPEED TO THE OVERLAY ZONE(MPH)	45.0
AVERAGE SPEED THROUGH OVERLAY ZONE (OVERLAY DIRECTION) (MPH)	45.0
AVERAGE SPEED THROUGH OVERLAY ZONE (NON-OVERLAY DIRECTION) (MPH)	45.0
PROPORTION OF ADT ARRIVING EACH HOUR OF CONSTRUCTION (PERCENT)	1.0
PERCENT TRUCKS IN ADT	7.9

PAVEMENT DESIGN TYPE # 4 -- ACP + ASPH STAB BASE + FLEX BASE OVER SUBGRADE

FROM	DIST.-22	COUNTY-240	CONT.	SECT.	JOB	HIGHWAY	DATE	PAGE
000	Laredo	WEBB	0922	33	076	Las Cruces	3/17/2014	2

INPUT DATA CONTINUED

CONSTRUCTION AND MAINTENANCE DATA

MINIMUM OVERLAY THICKNESS (INCHES)	1.5
OVERLAY CONSTRUCTION TIME (HOURS/DAY)	12.0
ASPHALTIC CONCRETE COMPACTED DENSITY (TONS/C.Y.)	1.90
ASPHALTIC CONCRETE PRODUCTION RATE (TONS/HOUR)	200.0
WIDTH OF EACH LANE (FEET)	12.0
FIRST YEAR COST OF ROUTINE MAINTENANCE (DOLLARS/LANE-MILE)	0.00
ANNUAL INCREMENTAL INCREASE IN MAINTENANCE COST (DOLLARS/LANE-MILE)	0.00

DETOUR DESIGN FOR OVERLAYS

TRAFFIC MODEL USED DURING OVERLAYING	2
TOTAL NUMBER OF LANES OF THE FACILITY	2
NUMBER OF OPEN LANES IN RESTRICTED ZONE (OVERLAY DIRECTION)	0
NUMBER OF OPEN LANES IN RESTRICTED ZONE (NON-OVERLAY DIRECTION)	1
DISTANCE TRAFFIC IS SLOWED (OVERLAY DIRECTION) (MILES)	0.60
DISTANCE TRAFFIC IS SLOWED (NON-OVERLAY DIRECTION) (MILES)	0.60
DETOUR DISTANCE AROUND THE OVERLAY ZONE (MILES)	0.00

PAVING MATERIALS INFORMATION

LAYER	CODE	MATERIALS NAME	COST PER CY	E MODULUS	POISSON RATIO	MIN. DEPTH	MAX. DEPTH	SALVAGE PCT.
1	A	ASPH CONC PVMT	115.00	500000.	0.35	2.00	2.00	30.00
2	B	ASPH STAB BASE	100.00	400000.	0.35	4.00	10.00	90.00
3	C	FLEXIBLE BASE	37.00	24000.	0.33	6.00	12.00	75.00
4	D	SUBGRADE(200)	2.00	8000.	0.40	200.00	200.00	90.00

Texas Department of Transportation

TEXAS DEPARTMENT OF TRANSPORTATION

F P S21-1.3 — FLEXIBLE PAVEMENT SYSTEM — Release:12-7-2012

PAVEMENT DESIGN TYPE # 4 -- ACP + ASPH STAB BASE + FLEX BASE OVER SUBGRADE

PROB	DIST.-22	COUNTY-240	CONT.	SECT.	JOB	HIGHWAY	DATE	PAGE
000	Laredo	WEBB	0922	33	076	Las Cruces	3/17/2014	3

C. LEVEL C — SUMMARY OF THE BEST DESIGN STRATEGIES IN ORDER OF INCREASING TOTAL COST

	1	2	3	4	5
MATERIAL ARRANGENENT	ABC	ABC	ABC	ABC	ABC
INIT. CONST. COST	30.25	30.61	37.56	34.00	38.74
OVERLAY CONST. COST	3.25	3.04	0.00	3.25	0.00
USER COST	0.00	0.00	0.00	0.00	0.00
ROUTINE MAINT. COST	0.00	0.00	0.00	0.00	0.00
SALVAGE VALUE	-6.14	-6.26	-7.50	-6.81	-7.68
TOTAL COST	27.36	27.39	30.05	30.44	31.06
NUMBER OF LAYERS	3	3	3	3	3
LAYER DEPTH (INCHES)					
D(1)	2.00	2.00	2.00	2.00	2.00
D(2)	6.00	6.50	9.00	5.50	8.50
D(3)	7.00	6.00	6.00	12.00	8.50
NO.OF PERF.PERIODS	2	2	1	2	1
PERF. TIME (YEARS)					
T(1)	10.	11.	22.	10.	20.
T(2)	24.	26.		24.	
OVERLAY POLICY(INCH) (INCLUDING LEVEL-UP)					
O(1)	2.0	2.0		2.0	

THE TOTAL NUMBER OF FEASIBLE DESIGNS CONSIDERED WAS 116

	Thickness (inches)	Modulus (ksi)	Poisson's Ratio	Material Name
ASPH CONC PVMT	2.00	500.00	0.35	ASPH CONC PVMT
ASPH STAB BASE	8.50	400.00	0.35	ASPH STAB BASE
FLEXIBLE BASE	8.50	24.00	0.33	FLEXIBLE BASE
SUBGRADE(200)	200.00	8.00	0.40	SUBGRADE(200)
Bed Rock		800.00	0.15	Bed Rock

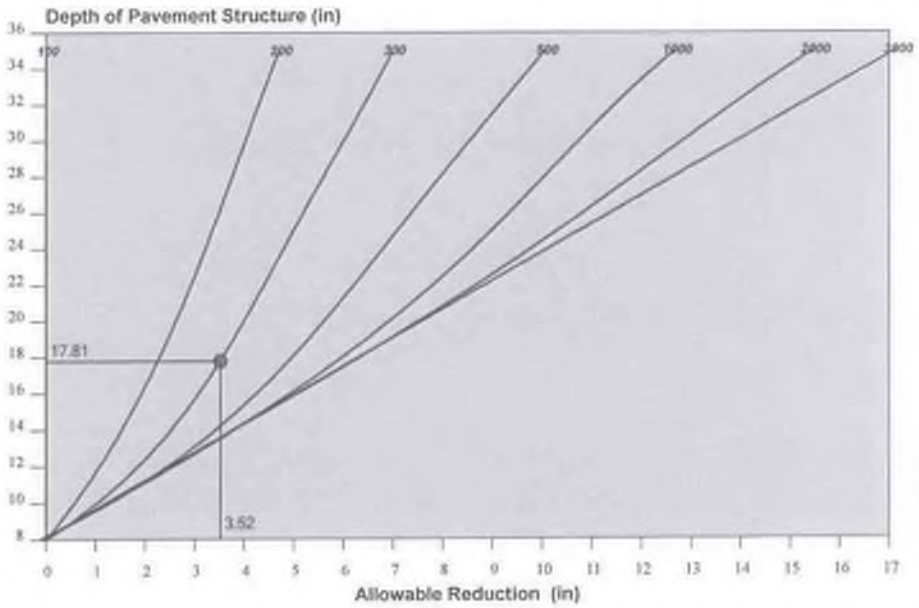

Thickness Reduction Chart for Stabilized Layers

INPUT PARAMETERS:

The Heaviest Wheel Loads Daily (ATHWLD)	12800.0 (lb)
Percentage of TandemAxles	70.0 (%)
Modified Cohesionmeter Value	300.0
Design Wheel Load	16640.0 (lb)
Subgrade Texas Triaxial Class Number (TTC)	4.41

User Input TTC based on historical TEX-117-E

RESULT:

Triaxial Thickness Required	17.8 (in)
The FPS Design Thickness	19.0 (in)
Allowable Thickness Reduction	3.5 (in)
Modified Triaxial Thickness	14.3 (in)

TRIAXIAL CHECK CONCLUSION:

The Design OK !

FPS 21 Triaxial Design Check Output		(FPS21-1.3Release:12-7-2012)	
Highway	Las Cruces	Problem	000
C-S-J	0922 - 33 - 076	Date	3/17/2014
District	Laredo	County	WEBB

Design Type:Asphalt concrete + Asphalt Stabilized Base + Flexible Base over Subgrade

Design- 5

Thick (in)	Modulus (ksi)	Poisson's Ratio	Mat.Type
2.00	500.0	0.35	ASPH CONC PVMT
8.50	400.0	0.35	ASPH STAB BASE
8.50	24.0	0.33	FLEXIBLE BASE
200.00	8.0	0.40	SUBGRADE(200)

Total Life: 20.1 years Cost: $31.06

Performance:

No. of Perf. Period	1
Perf. Time (year)	20.1
Overlay Policy (in)	

Cost:

Initial Construction Cost	38.736
Overlay Construction Cost	0.000
User Cost	0.000
Routine Maintain Cost	0.000
Salvage Value	-7.680
Total Cost of Pavement	31.056

FPS 21 Feasible Design Plotting Output		(FPS21-1.3Release:12-7-2012)	
Highway	Las Cruces	Problem	000
C-S-J	0922 - 33 - 076	Date	3/17/2014
District	Laredo	County	WEBB
Design Type:Asphalt concrete + Asphalt Stabilized Base + Flexible Base over Subgrade			

	Thickness (inches)	Modulus (ksi)	Poisson's Ratio	Material Name
ASPH CONC PVMT	2.00	500.00	0.35	ASPH CONC PVMT
ASPH STAB BASE	9.00	400.00	0.35	ASPH STAB BASE
FLEXIBLE BASE	6.00	24.00	0.33	FLEXIBLE BASE
SUBGRADE(200)	200.00	8.00	0.40	SUBGRADE(200)
Bed Rock		800.00	0.15	Bed Rock

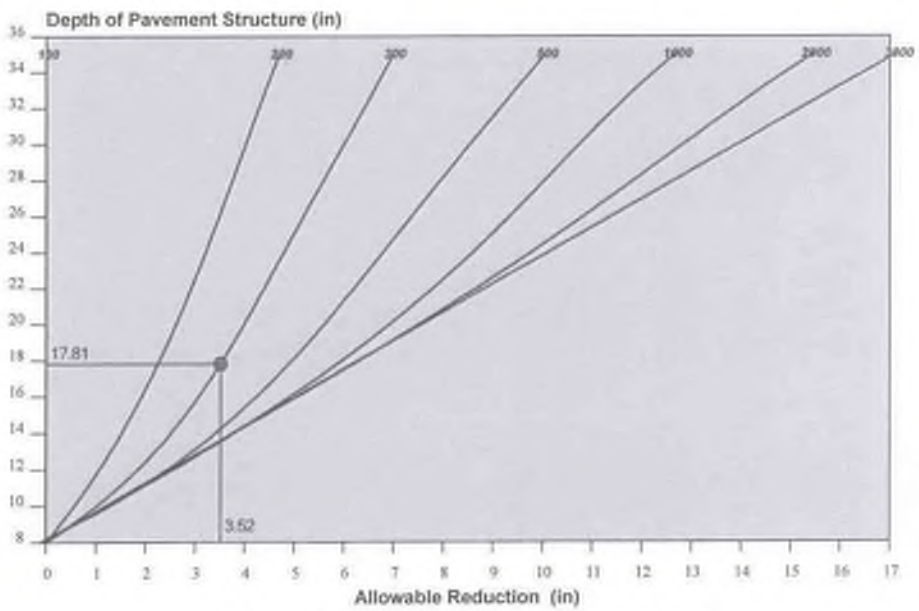

Thickness Reduction Chart for Stabilized Layers

INPUT PARAMETERS:

The Heaviest Wheel Loads Daily (ATHWLD)	12800.0 (lb)
Percentage of TandemAxles	70.0 (%)
Modified Cohesionmeter Value	300.0
Design Wheel Load	16640.0 (lb)
Subgrade Texas Triaxial Class Number (TTC)	4.41

User Input TTC based on historical TEX-117-E

RESULT:

Triaxial Thickness Required	17.8 (in)
The FPS Design Thickness	17.0 (in)
Allowable Thickness Reduction	3.5 (in)
Modified Triaxial Thickness	14.3 (in)

TRIAXIAL CHECK CONCLUSION:

The Design OK !

FPS 21 Triaxial Design Check Output		(FPS21-1.3Release:12-7-2012)	
Highway	Las Cruces	Problem	000
C-S-J	0922 - 33 - 076	Date	3/17/2014
District	Laredo	County	WEBB

Design Type:Asphalt concrete + Asphalt Stabilized Base + Flexible Base over Subgrade

Design- 3

Thick (in)	Modulus (ksi)	Poisson's Ratio	Mat.Type
2.00	500.0	0.35	ASPH CONC PVMT
9.00	400.0	0.35	ASPH STAB BASE
6.00	24.0	0.33	FLEXIBLE BASE
200.00	8.0	0.40	SUBGRADE(200)

Total Life: 21.7 years Cost: $30.05

Performance:

No. of Perf. Period	1
Perf. Time (year)	21.7
Overlay Policy (in)	

Cost:

Initial Construction Cost	37.556
Overlay Construction Cost	0.000
User Cost	0.000
Routine Maintain Cost	0.000
Salvage Value	-7.505
Total Cost of Pavement	30.051

FPS 21 Feasible Design Plotting Output		(FPS21-1.3Release:12-7-2012)	
Highway	Las Cruces	Problem	000
C-S-J	0922 - 33 - 076	Date	3/17/2014
District	Laredo	County	WEBB
Design Type:Asphalt concrete + Asphalt Stabilized Base + Flexible Base over Subgrade			

Texas Department of Transportation

TEXAS DEPARTMENT OF TRANSPORTATION

F.P.S21-1.3 — FLEXIBLE PAVEMENT SYSTEM — Release:12-7-2012

PAVEMENT DESIGN TYPE # 7 -- USER DEFINED PAVEMENT

PROB	DIST.-22	COUNTY-240	CONT.	SECT.	JOB	HIGHWAY	DATE	PAGE
000	Laredo	WEBB	0922	33	076	Las Cruces	3/17/2014	1

COMMENTS ABOUT THIS PROBLEM

FDR design of IH 35
Use cement stabilized subbase
Traffic 2 million

BASIC DESIGN CRITERIA

LENGTH OF THE ANALYSIS PERIOD (YEARS)	20.0
MINIMUM TIME TO FIRST OVERLAY (YEARS)	10.0
MINIMUM TIME BETWEEN OVERLAYS (YEARS)	3.0
DESIGN CONFIDENCE LEVEL (95.0%)	5
SERVICEABILITY INDEX OF THE INITIAL STRUCTURE	4.2
FINAL SERVICEABILITY INDEX P2	2.5
SERVICEABILITY INDEX P1 AFTER AN OVERLAY	4.2
DISTRICT TEMPERATURE CONSTANT	31.0
SUBGRADE ELASTIC MODULUS by COUNTY (ksi)	8.00
INTEREST RATE OR TIME VALUE OF MONEY (PERCENT)	7.0

PROGRAM CONTROLS AND CONSTRAINTS

NUMBER OF SUMMARY OUTPUT PAGES DESIRED (8 DESIGNS/PAGE)	3
MAX FUNDS AVAILABLE PER SQ.YD. FOR INITIAL DESIGN (DOLLARS)	99.00
MAXIMUM ALLOWED THICKNESS OF INITIAL CONSTRUCTION (INCHES)	69.0
ACCUMULATED MAX DEPTH OF ALL OVERLAYS (INCHES) (EXCLUDING LEVEL-UP)	6.0

TRAFFIC DATA

ADT AT BEGINNING OF ANALYSIS PERIOD (VEHICLES/DAY)	14300.
ADT AT END OF TWENTY YEARS (VEHICLES/DAY)	20000.
ONE-DIRECTION 20YEAR 18 kip ESAL (millions)	3.700
AVERAGE APPROACH SPEED TO THE OVERLAY ZONE(MPH)	45.0
AVERAGE SPEED THROUGH OVERLAY ZONE (OVERLAY DIRECTION)(MPH)	45.0
AVERAGE SPEED THROUGH OVERLAY ZONE (NON-OVERLAY DIRECTION) (MPH)	45.0
PROPORTION OF ADT ARRIVING EACH HOUR OF CONSTRUCTION (PERCENT)	1.0
PERCENT TRUCKS IN ADT	7.8

PAVEMENT DESIGN TYPE # 7 -- USER DEFINED PAVEMENT

PROB	DIST.-22	COUNTY-240	CONT.	SECT.	JOB	HIGHWAY	DATE	PAGE
000	Laredo	WEBB	0922	33	076	Las Cruces	3/17/2014	2

INPUT DATA CONTINUED

CONSTRUCTION AND MAINTENANCE DATA

MINIMUM OVERLAY THICKNESS (INCHES)	1.5
OVERLAY CONSTRUCTION TIME (HOURS/DAY)	12.0
ASPHALTIC CONCRETE COMPACTED DENSITY (TONS/C.Y.)	1.90
ASPHALTIC CONCRETE PRODUCTION RATE (TONS/HOUR)	200.0
WIDTH OF EACH LANE (FEET)	12.0
FIRST YEAR COST OF ROUTINE MAINTENANCE (DOLLARS/LANE-MILE)	0.00
ANNUAL INCREMENTAL INCREASE IN MAINTENANCE COST (DOLLARS/LANE-MILE)	0.00

DETOUR DESIGN FOR OVERLAYS

TRAFFIC MODEL USED DURING OVERLAYING	2
TOTAL NUMBER OF LANES OF THE FACILITY	2
NUMBER OF OPEN LANES IN RESTRICTED ZONE (OVERLAY DIRECTION)	0
NUMBER OF OPEN LANES IN RESTRICTED ZONE (NON-OVERLAY DIRECTION)	1
DISTANCE TRAFFIC IS SLOWED (OVERLAY DIRECTION) (MILES)	0.60
DISTANCE TRAFFIC IS SLOWED (NON-OVERLAY DIRECTION) (MILES)	0.60
DETOUR DISTANCE AROUND THE OVERLAY ZONE (MILES)	0.00

PAVING MATERIALS INFORMATION

LAYER	CODE	MATERIALS NAME	COST PER CY	E MODULUS	POISSON RATIO	MIN. DEPTH	MAX. DEPTH	SALVAGE PCT.
1	C	DENSE-GRADED HMA T	115.00	650000.	0.35	4.00	12.00	90.00
2	M	FLEXIBLE BASE	37.00	50000.	0.35	6.00	12.00	75.00
3	M	FLEXIBLE BASE	37.00	50000.	0.35	6.00	12.00	75.00
4	M	FLEXIBLE BASE	37.00	50000.	0.35	6.00	12.00	75.00
5	T	SUBGRADE	2.00	8000.	0.40	200.00	200.00	90.00

WARNING :
THERE ARE MORE THAN 1000 FEASIBLE INITIAL DESIGNS FOR THIS SET OF MATERIALS

CONSTRAINTS SHOULD BE REVISED - PROBLEM CONTINUES

PAVEMENT DESIGN TYPE # 7 -- USER DEFINED PAVEMENT

PROB	DIST.-22	COUNTY-240	CONT.	SECT.	JOB	HIGHWAY	DATE	PAGE
000	Laredo	WEBB	0922	33	076	Las Cruces	3/17/2014	3

C. LEVEL C SUMMARY OF THE BEST DESIGN STRATEGIES IN ORDER OF INCREASING TOTAL COST

	1	2	3	4	5	6	7	8
MATERIAL ARRANGEMENT	CMMM	CMMM	CMMM	CMMM	CMMM	CMMM	CMMM	CMMM
INIT. CONST. COST	33.39	33.39	34.47	40.86	41.32	41.32	41.32	41.32
OVERLAY CONST. COST	3.25	3.25	2.84	0.00	0.00	0.00	0.00	0.00
USER COST	0.00	0.00	0.00	0.00	0.00	0.00	0.00	0.00
ROUTINE MAINT. COST	0.00	0.00	0.00	0.00	0.00	0.00	0.00	0.00
SALVAGE VALUE	-8.14	-8.14	-8.41	-8.79	-8.81	-8.81	-8.81	-8.81
TOTAL COST	28.50	28.50	28.50	32.07	32.51	32.51	32.51	32.51
NUMBER OF LAYERS	4	4	4	4	4	4	4	4
LAYER DEPTH (INCHES)								
D(1)	4.50	4.50	5.00	7.00	6.50	6.50	6.50	6.50
D(2)	6.50	6.00	6.00	6.00	6.00	7.50	7.00	6.50
D(3)	6.00	6.50	6.00	6.00	6.00	6.50	7.00	7.50
D(4)	6.00	6.00	6.00	6.00	6.00	6.00	6.00	6.00
NO.OF PERF.PERIODS	2	2	2	1	1	1	1	1
PERF. TIME (YEARS)								
Y(1)	10.	10.	12.	22.	20.	20.	20.	20.
Y(2)	24.	24.	26.					
OVERLAY POLICY(INCH) (INCLUDING LEVEL-UP)								
O(1)	2.0	2.0	2.0					

THE TOTAL NUMBER OF FEASIBLE DESIGNS CONSIDERED WAS 940

TEXAS DEPARTMENT OF TRANSPORTATION

F P S21-1.3 FLEXIBLE PAVEMENT SYSTEM Release:12-7-2012

PAVEMENT DESIGN TYPE # 7 -- USER DEFINED PAVEMENT

PROB	DIST.-22	COUNTY-240	CONT.	SECT.	JOB	HIGHWAY	DATE	PAGE
000	Laredo	WEBB	0922	33	076	Las Cruces	3/17/2014	4

C. LEVEL C SUMMARY OF THE BEST DESIGN STRATEGIES
IN ORDER OF INCREASING TOTAL COST
9

MATERIAL ARRANGEMENT	CNMM
INIT. CONST. COST	41.32
OVERLAY CONST. COST	0.00
USER COST	0.00
ROUTINE MAINT. COST	0.00
SALVAGE VALUE	-8.81
TOTAL COST	32.51
NUMBER OF LAYERS	4
LAYER DEPTH (INCHES)	
D(1)	6.50
D(2)	6.00
D(3)	8.00
D(4)	6.00
NO.OF PERF.PERIODS	1
PERF. TIME (YEARS)	
T(1)	20.
OVERLAY POLICY(INCH) (INCLUDING LEVEL-UP)	

THE TOTAL NUMBER OF FEASIBLE DESIGNS CONSIDERED WAS 940

	Thickness (inches)	Modulus (ksi)	Poisson's Ratio	Material Name
DENSE-GRADED HMA Thick	6.50	650.00	0.35	DENSE-GRADED HMA Thick
FLEXIBLE BASE	8.00	50.00	0.35	FLEXIBLE BASE
FLEXIBLE BASE	6.00	50.00	0.35	FLEXIBLE BASE
FLEXIBLE BASE	6.00	50.00	0.35	FLEXIBLE BASE
SUBGRADE	200.00	8.00	0.40	SUBGRADE
Bed Rock		800.00	0.15	Bed Rock

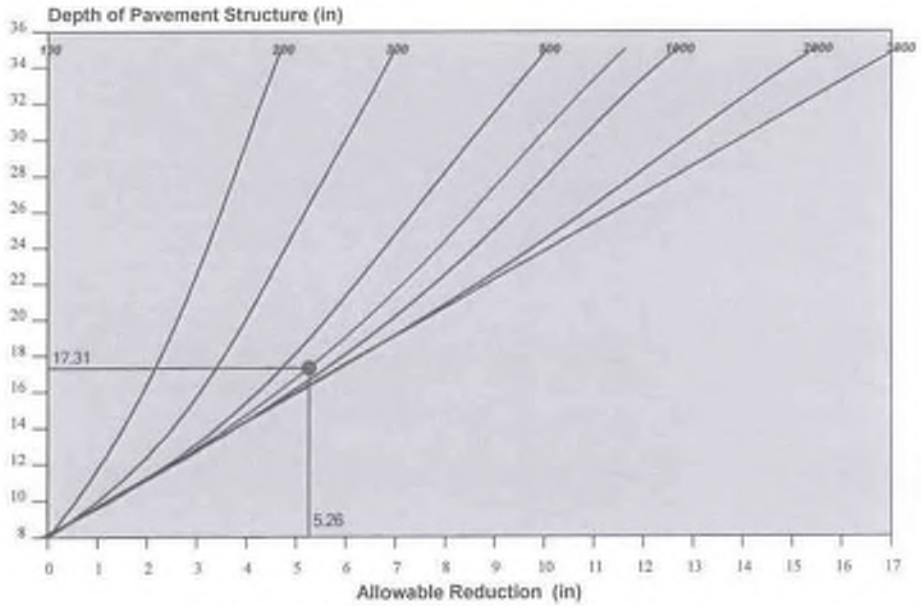

Thickness Reduction Chart for Stabilized Layers

INPUT PARAMETERS:

The Heaviest Wheel Loads Daily (ATHWLD)	12000.0 (lb)
Percentage of TandemAxles	50.0 (%)
Modified Cohesionmeter Value	800.0
Design Wheel Load	15600.0 (lb)
Subgrade Texas Triaxial Class Number (TTC) Calculated TTC based on input soil PI	4.41
User Input Sub-Grade Plasticity Index (PI)	19.00

RESULT:

Triaxial Thickness Required	17.3 (in)
The FPS Design Thickness	26.5 (in)
Allowable Thickness Reduction	5.3 (in)
Modified Triaxial Thickness	12.0 (in)

TRIAXIAL CHECK CONCLUSION:

The Design OK !

FPS 21 Triaxial Design Check Output		(FPS21-1.3Release:12-7-2012)	
Highway	Las Cruces	Problem	000
C-S-J	0922 - 33 - 076	Date	3/17/2014
District	Laredo	County	WEBB
Design Type:User Defined Pavement Design			

Design- 5

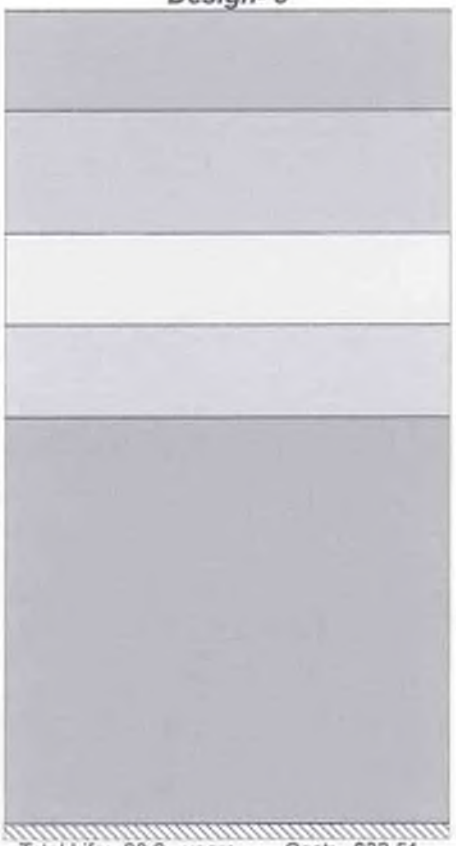

Thick (in)	Modulus (ksi)	Poisson's Ratio	Mat.Type
6.50	650.0	0.35	DENSE-GRADED HMA Thick
8.00	50.0	0.35	FLEXIBLE BASE
6.00	50.0	0.35	FLEXIBLE BASE
6.00	50.0	0.35	FLEXIBLE BASE
200.00	8.0	0.40	SUBGRADE

Total Life: 20.2 years Cost: $32.51

Performance:

No. of Perf. Period	1
Perf. Time (year)	20.2
Overlay Policy (in)	

Cost:

Initial Construction Cost	41.319
Overlay Construction Cost	0.000
User Cost	0.000
Routine Maintain Cost	0.000
Salvage Value	-8.813
Total Cost of Pavement	32.506

FPS 21 Feasible Design Plotting Output		(FPS21-1.3Release:12-7-2012)	
Highway	Las Cruces	Problem	000
C-S-J	0922 - 33 - 076	Date	3/17/2014
District	Laredo	County	WEBB
Design Type:User Defined Pavement Design			

Option 1

Pavement Design
(AASHTO 1993 Method)

Design Inputs		**Asphalt**			**Concrete**	
Sugrade Support	CBR =	3				
	Mr =	4500	psi	k =	80	pci
Reliability		90	%		90	%
Standard Deviation	So =	0.45			0.35	
Initial Serviceability	Po =	4.2			4.5	
Terminal Serviceability	Pt =	2.5			2.5	
Design Serviceability Loss,	ΔPSI =	1.7			2.0	

Layer Coefficients:

AC Surface and Binder	a_1 =	0.44
AC Base	a2 =	0.44
Aggregate Base	a3 =	0.14
Subbase	a3 =	0.00

Concrete Compressive Strength	=	4000	psi
Modulus of Elasticity of Concrete	=	3,600	ksi
Modulus of Rupture of Concrete:	=	580	
Load Transfer ("J" Factor)	=	3.8	
Drainage Coefficient	=	1.0	

	Major Collector
Asphalt Section Traffic (18 kip ESAL) =	3,700,000

Asphalt Pavement Section	Drainage, m		
AC Surface + Binder		**2.0**	in.
Asphalt Base		**6.5**	in.
Aggregate Base	1.0	**10.0**	in.
Subbase	1.0	**6.0**	in.
	Structural Number:	**5.14**	
	Structural Number - Required	***5.10***	

	Major Collector
Concrete Section Traffic (18 kip ESAL) =	4,900,000

Concrete Pavement Section **10.7** in.

Project: West Laredo Corridor, Phase II Location: Laredo, Texas

Project No. 89145003 Date: 03/17/14

Terracon

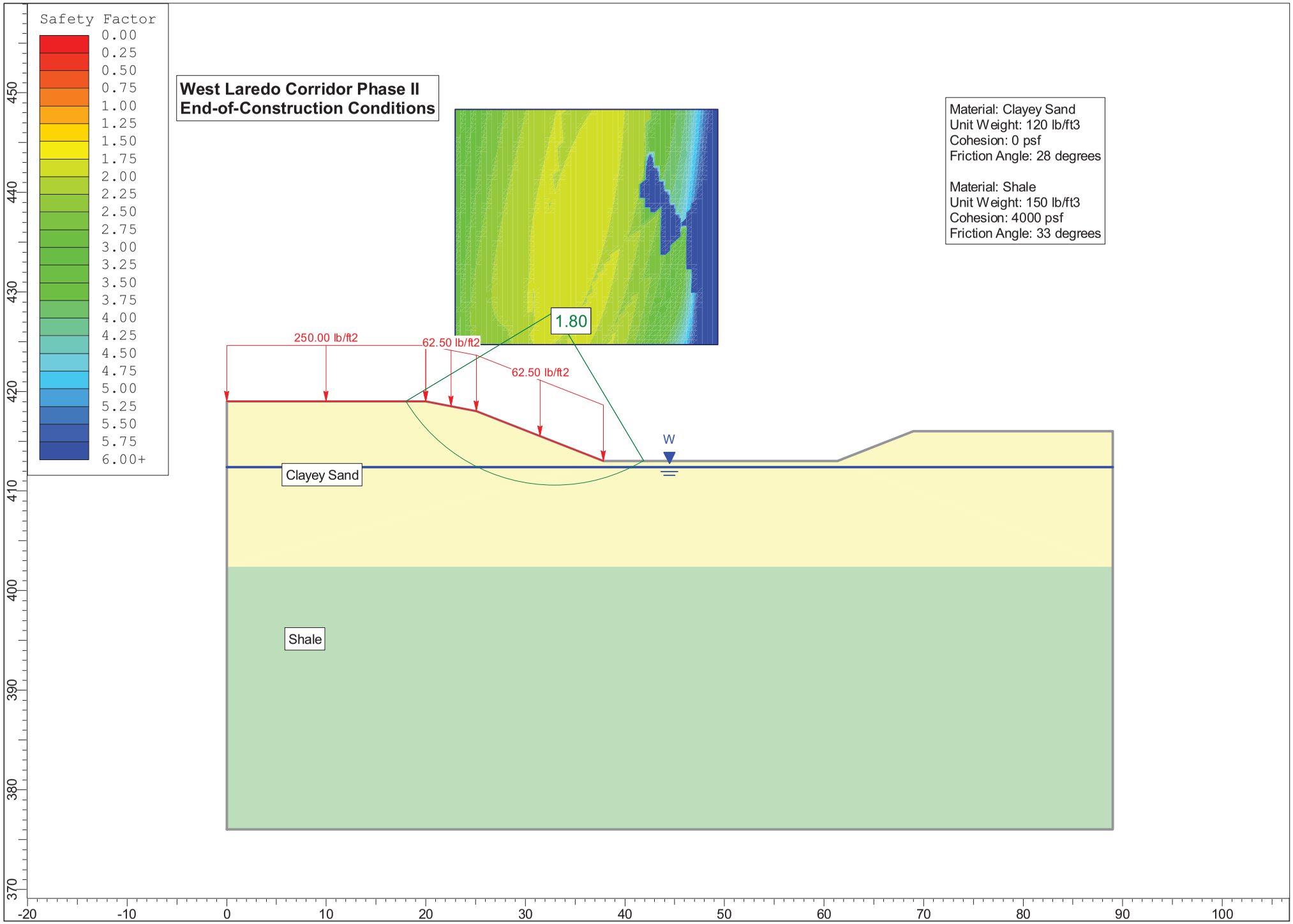
Safety Factor
0.00
0.25
0.50
0.75
1.00
1.25
1.50
1.75
2.00
2.25
2.50
2.75
3.00
3.25
3.50
3.75
4.00
4.25
4.50
4.75
5.00
5.25
5.50
5.75
6.00+
West Laredo Corridor Phase II
End-of-Construction Conditions
Material: Clayey Sand
Unit Weight: 120 lb/ft3
Cohesion: 0 psf
Friction Angle: 28 degrees
Material: Shale
Unit Weight: 150 lb/ft3
Cohesion: 4000 psf
Friction Angle: 33 degrees
1.80
250.00 lb/ft2
62.50 lb/ft2
62.50 lb/ft2
W
Clayey Sand
Shale
450
440
430
420
410
400
390
380
370
-20
-10
0
10
20
30
40
50
60
70
80
90
100

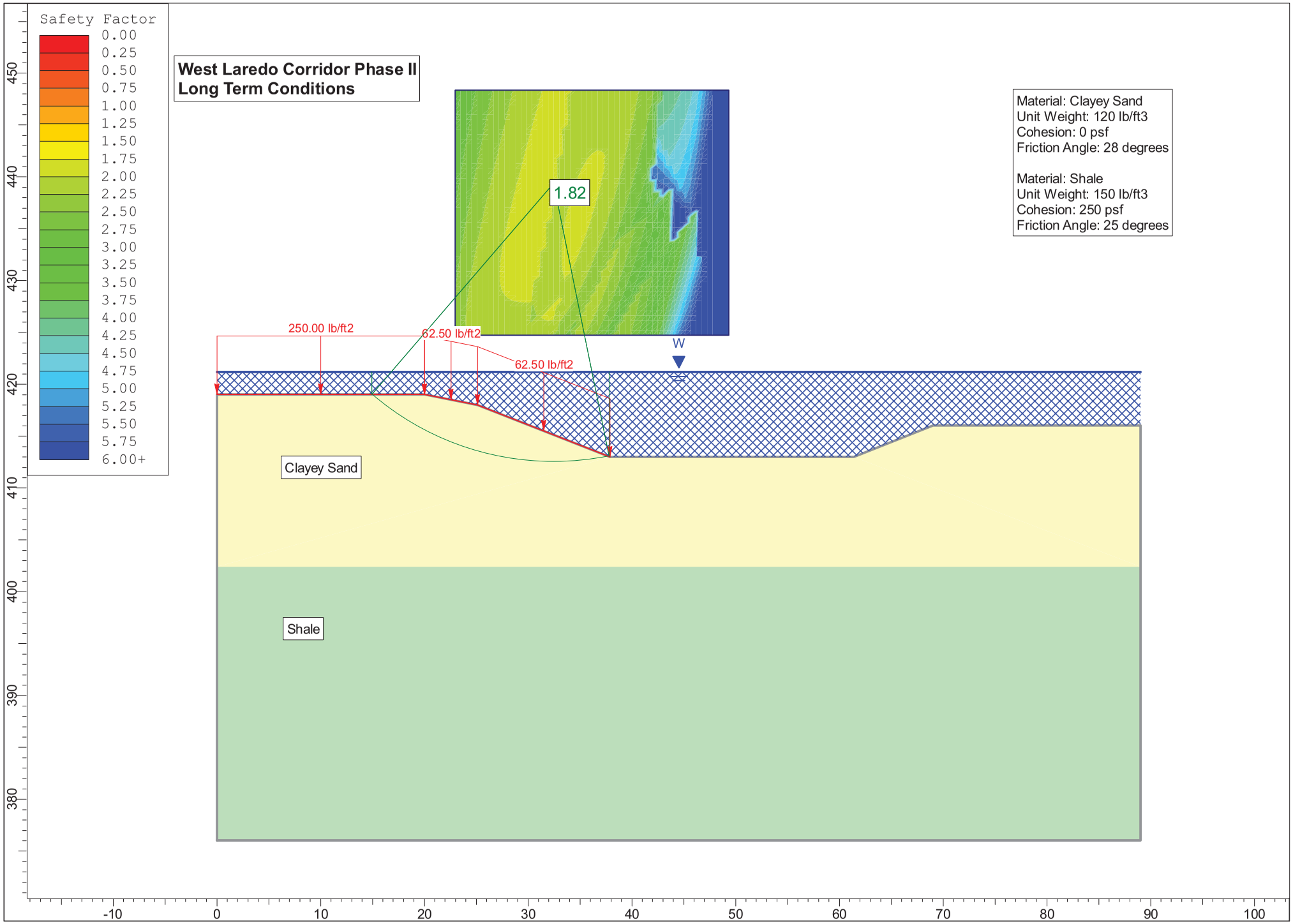
Safety Factor
0.00
0.25
0.50
0.75
1.00
1.25
1.50
1.75
2.00
2.25
2.50
2.75
3.00
3.25
3.50
3.75
4.00
4.25
4.50
4.75
5.00
5.25
5.50
5.75
6.00+
West Laredo Corridor Phase II
Long Term Conditions
1.82
Material: Clayey Sand
Unit Weight: 120 lb/ft3
Cohesion: 0 psf
Friction Angle: 28 degrees
Material: Shale
Unit Weight: 150 lb/ft3
Cohesion: 250 psf
Friction Angle: 25 degrees
250.00 lb/ft2
62.50 lb/ft2
62.50 lb/ft2
W
Clayey Sand
Shale
450
440
430
420
410
400
390
380
-10
0
10
20
30
40
50
60
70
80
90
100

CITY OF LAREDO

UTILITY SPECIFICATIONS:

West Laredo Multi-modal Trade Corridor – Phase II
(Flecha/Las Cruces Realignment Project)
Project No: DMO 2012 (628)
CSJ: 0922-33-076

SECTION 102
EXCAVATION AND BACKFILL FOR UTILITIES

D-102.01 SCOPE: This section shall govern all excavation and backfill which will be encountered during the work, and supplements those paragraphs pertaining to excavation in Sections entitled **"SPECIFICATIONS FOR SDR 26-GRAVITY SEWER PIPING", "WATER LINE CONSTRUCTION", AND "PVC PIPE WATER CONDUITS & INSTALLATION"** of these specifications.

D-102.02 CLASSIFICATION: All excavation for this Project shall be considered unclassified. The Contractor is expected to determine the nature of the work and to make his bid prices reflective of the actual conditions which will be encountered. No claim for extra compensation shall be made by the Contractor due to rock, or other unfavorable excavation conditions encountered during the course of the work.

D-102.03 EXISTING UTILITIES: Before commencing excavation, the Contractor shall notify all utility companies with sufficient lead time, and confirm the location of existing underground lines and conduits in the work area by calling 811.

D-102.04 CLEARING: The Contractor shall do all clearing, grubbing, etc. necessary to complete the work.

D-102.05 DEWATERING: The Contractor shall provide and maintain adequate equipment to remove and dispose of all surface and ground-water entering excavations, trenches, or other parts of the work.

D-102.06 EXCAVATION: Unless otherwise ordered by the Engineer in writing, trench shall be as indicated in the Drawings, and trenching for water lines shall be excavated to a depth of five feet.

D-102.07 SHEETING AND SHORING: Where necessary to protect workmen, the work, or the existing structures, the Contractor shall sheet, brace, and shore the excavation to prevent caving or sliding. This item is further described in Division D, Section 802, entitled **"SHEETING AND BRACING"**.

D-102.08 DISPOSAL OF EXCESS SOIL: Unless otherwise specified, the Contractor shall dispose of all unsuitable or excess excavation spoil daily. Disposal shall be made at a location and in a manner which is acceptable to the Owner.

D-102.09 PIPE ZONE: The "pipe zone" shall mean that portion of the trench which extends from 24 " above the top of the pipe joints to the bottom of the excavation. "Above the pipe zone" shall mean that portion of the trench which shall extend from 24" above the top of the pipe joints to the top of the finished surface.

D-102.10 BLASTING: Shall be prohibited except where allowed in writing by the City and Engineer. The Contractor shall take all necessary precautions as specified in the General Provisions of these Specifications. The Contractor shall be solely responsible for any damage incurred due to blasting.

D-102.11 OVER-EXCAVATION: In the event of over-excavation, the over- excavated depth of the trench shall be filled with the appropriate bedding material.

D-102.12 STABILIZATION: Subgrades for pipe work shall be firm, dense, and thoroughly consolidated. The subgrade shall be free of mud, muck, loose material and debris, and shall remain firm and intact under the workmen's feet.

D-102.13 PIPE EMBEDMENT & PIPE ZONE BACKFILL: The first layer of backfill shall be sufficient to provide a compacted depth of one-half the outside diameter of the barrel. This layer shall be placed by hand and tamped with hand or pneumatic tampers. The rest of the pipe zone shall be placed in a similar manner in layers not to exceed 8" loose measure to the top of the pipe zone. Unless otherwise specified, the embedment and material in the pipe zone shall be zero P.I. sand or gravel material, as specified by the engineer. Select excavation material may be acceptable; however, the contractor shall be required to submit ample sieve analysis results from a reputable independent testing laboratory to the engineer in order to use such materials for embedment. Backfill material containing rock over 3" in any dimension shall not be used in trenches under paved areas. The pipe trench shall be backfilled in a manner so as to prevent future settlement for a period of one year after date of final payment. All secondary backfill material shall be as required on section D-102.14, 1.2.

Before leaving the work at night or any other time, the upper ends of all pipes shall be securely closed with a tight fitting plug and provisions shall be made to keep the line from floating out of place should the trench fill with water. Any damage to the lines from failure to follow these provisions shall be repaired at Contractor's expense.

Provisions must be made at all times to keep the interior of the pipe that has been laid free from dirt, silt, gravel, and any other foreign matter and any such material that is deposited within the pipe from any cause whatsoever must be removed as the work progresses.

D-102.14 BACKFILLING: All trenches and excavations shall be backfilled within 24 hours after pipes are installed therein unless other means of protecting the pipe is directed by the Engineer. At no times, however, shall any backfilling be done until the Engineer has inspected the pipe to be covered. Backfilling requirements:

Materials:

1.1. Initial (primary) backfill to a point of 12 inches above the top of pipe shall be done as follows:

1.1.1. Suitable excavated material placed in uniform lifts not more than 6 inches in depth and shall be compacted to the density specified herein. The maximum dry density and optimum moisture shall be determined as per TxDot Tex-114-E. Test for in place density shall be in accordance with TxDOT Tex-115-E within 24 hours after compaction. Each lift shall be compacted to the required density and moisture as shown bellow, unless otherwise shown on the plans:

Subgrade Material	Density	Moisture Content
PI ≤ 20	≥ 95 % of Max Dry Density	± 2% of Opt. or greater
PI > 20	≥ 95 % of Max Dry Density	≥ Opt. Moisture

1.1.2. Zero PI Sand. When shown on the plans, backfill the primary trench zone with zero PI sand. Non-plastic material meeting the specifications below will not be required to be tested for density.

OPTION ZERO P.I.
SIEVE ANALYSIS

Passing 3/8" sieve	95-100%
Passing 1/4" sieve	85-100%
Passing No.40 sieve	75-100%
Passing No.80 sieve	20- 90%
Passing No.200 sieve	00- 20%

The sand shall be placed in layers no to exceed 10 inches in depth and lightly tamped to consolidate the mass against pipe and earth surfaces.
There is no separate item for sand, unless shown on the plans as a separate pay item.

1.1.3. Flowable Backfill. When shown on the plans, conform with Division D Section 134. There is no separate item for sand, unless shown on the plans as a separate pay item.

1.1.4. Select Fill or Flexible Base (gravel, caliche, crushed limestone).

Clean gravel approved by the engineer may be used for backfill from the bottom of the trench to the 12 inches above the top of pipe. The gravel shall be placed in layers no to exceed 10 inches in depth and lightly tamped to consolidate the mass against pipe and earth surfaces.

Flexible base material (caliche, crushed limestone) may be used from the bottom of the trench to 12 inches above the top of the pipe or to the bottom of the street base in lifts no to exceed 8 inches. Material shall contain the required moisture to obtain the density for each layer to no less of 95% of the maximum dry density. There is no separate item for sand, unless shown on the plans as a separate pay item.

1.2. Secondary Backfill. After the initial backfill has been completed at a point of 12 inches above the top of pipe, the material for secondary backfill shall be placed in uniform layers no more than 10 inches in depth (loose measurement) and shall be compacted to the required density specified herein. Excavation material used for secondary backfill shall comply with the following unless shown on the plans:

Secondary Backfill

Under Pavement		
Subgrade Mat.	PI≤ 20	PI > 20
Density	≥ 95% Max Dry Dens.	≥ 95% Max Dry Dens.
Moisture Cont.	± 2% of Opt. or greater	≥ Opt. Moisture

Within the R.O.W. or Easement		
Subgrade Mat.	PI≤ 20	PI > 20
Density	≥ 90% Max Dry Dens.	≥ 90% Max Dry Dens.
Moisture Cont.	± 2% of Opt. or greater	≥ Opt. Moisture

(1).Timing of backfill: All trenches and excavation shall be backfilled within twenty-four (24) hours after pipes are installed, unless other means of protecting pipe is directed by the Engineer. At no time, however, shall any backfilling be done until the Engineer has inspected the pipe to be covered. In the case the trench cannot be backfilled, steel plates shall be used to protect the public.

(2).Backfill placement: After the bedding has been prepared and the pipes installed as required by the pertinent specifications, selected materials from excavation or borrow shall be placed along both sides of the pipe equally in uniform layers not exceeding six (6) inches in depth (loose measurement) in the primary backfill zone and ten (10) inches in depth (loose measurement) in the secondary backfill zone, wetted if required, and thoroughly compacted so that on each side of the pipe there shall be a berm of thoroughly compacted material at least as wide as the external diameter of the pipe, except insofar as undisturbed material obtrudes into this area.

(3).Addition to backfill: Whenever excavation is made for installing pipe culverts or sewers across private property or beyond the limits of the embankment, the top soil removed in excavating the trench shall be kept separate and replaced, as nearly as feasible, in its original position, and the entire area involved in the construction operations shall be restored to a presentable condition.

(4).Earth trench: In earth trench, the pipe shall be placed on the natural, undisturbed earth foundation with the trench bottom flat or nearly so. Where rock, shale, or boulders are encountered in the trench, the same shall be removed to a depth of six (6) inches below the grade line and the trench shall be refilled with good, sound earth, gravel, or granular material up to original grade and tamped into place.

(5).Inspection: Prior to the final approval of the utility lines, the Engineer, accompanied by the Contractor's representative, shall make a thorough inspection by appropriate methods of the entire installation. Any indication of defects in material or workmanship or obstruction in the pipe due to the Contractor's negligence shall be corrected by the Contractor without additional

compensation and in a manner as directed by the Engineer.

① **GENERAL:** There are five (5) different conditions for backfill of proposed pipe. The plans indicate which condition shall prevail in each section or block of the "pipe route". If the plans do not indicate a backfill condition, Condition "A" shall prevail.

Please refer to the appendix for Utility Trench Backfill Methods.

D-102.15 WATER JETTING: Only in "Condition C" above, and for pipe diameters of 12" or less, and in trenches 8' or less, and only when authority is obtained in writing from the City Engineer, backfill may be compacted with water by use of the jetting method. When using the jetting method, backfill above the pipe zone shall be placed in lifts not to exceed 5 feet. Water jetting shall be delivered under sufficient volume and pressure through an approved jetting hose and pipe nozzle. The jetting hose shall have a minimum inside dimension of two inches (2"). The jetting hose shall be connected to an approved minimum two inches (2") water pump capable of delivering water at the volume and pressure as required by the Engineer. The pipe nozzle shall be of sufficient length to introduce the water at a depth of not less than one foot (1') above the preceding lift. Points of trench jetting shall be staggered along the length of the trench and spaced at not more than three feet (3') on centers. Each five feet (5') lift shall be jetted initially at a depth of not more than one foot (1') above the preceding lift. Sufficient water shall be introduced into the secondary backfill to cause complete subsidence of the backfill and develop free standing water at the surface of each lift. After the final lift has been jetted as approved, twelve (12) hours shall be allowed for the reduction of the materials moisture content. When the backfill moisture content is acceptable for mechanical or pneumatic compaction, the surface shall be compacted to the satisfaction of the Engineer. The surface of the final lift of trenches subject to traffic shall be compacted by ditch tamping equipment.

D-102.16 SITE RESTORATION: The Contractor shall remove and dispose in an acceptable manner of all excess construction material, trash, debris, excess spoil material, etc., from the construction site. All pavement, fences, drainage structures, drainage ditches, and etc., shall be replaced to a condition as good as, or better than, the original structure as existed. The site shall be graded to a smooth well drained condition.

D-102.17 EXISTING GROUND WATER CONDITIONS: Where ground water conditions exist, the following shall apply inclusive of crushed stone or gravel backfilling. No pipe shall be laid in trench containing water. There will be no separate payment for trench dewatering or the materials, equipment, or labor required to reestablish wet trenches to the conditions and specifications required herein. Non-Storm Water Discharge Permit will need to be obtained from the Environmental Services Department.

D-102.18 DISPOSAL OF EXCAVATED MATERIALS: Excavated materials, so far as needed and of a suitable and acceptable character, shall be piled adjacent to the excavations to be used as backfill as required. All excavated material that is unsuitable for backfilling purposes or which is in excess of the amount required or needed to satisfactorily complete the backfill, shall be disposed of daily. The character and suitability of all backfill material shall meet the approval of the Engineer. Desirable top soil, or sod, etc., shall be carefully piled separately from the other excavated material

so that it can be placed in this original position when required. Excavated material shall be handled at all times in such manner as to cause a minimum of inconvenience to public travel and to permit safe and convenient access to private and public properties adjacent to or along the line of the work. In parkways and easements, where it is necessary to deposit excavated materials on lawns during the progress of the work, care shall be taken to prevent damage to such lawns. Where damage is done to such lawns all expense of replacing the lawn shall be borne by the Contractor.

D-102.19 REMOVAL AND REPLACEMENT OF SOD, SHRUBBERY, PLANTS, ETC.: Where it is necessary to remove the sod, shrubbery, plants, etc., in order to make any excavation for this work, such areas as are backfilled shall have the same sod, shrubbery, plants, etc. replaced in good condition or if necessary to furnish new sod, shrubbery, or plants of the same kind and in good condition, same shall be furnished by the Contractor at his expense.

The sod, where removal is deemed necessary, shall be removed in squares cut out with a sharp spade or other satisfactory tool; the square shall be of such sizes that they may be conveniently handles without breaking. Such sod shall be removed in layers of not less than four inches (4") depth and shall be stored and given proper attention to protect sod from drying out, pending the time of replacement.

If trees and plants shall be removed, this work shall be done in the approved manner as to require protection of roots, branches, etc.; when backfilling is completed the trees and plants shall be replaced in their original position or as near such position as possible.

If irrigation system has to be removed and replaced, refer to Section 806.

D-102.20 PROTECTION OF TREES, PLANTS, SHRUBBERY, ETC.: In developed areas where trees, plants, shrubbery, etc., are adjacent to the line of work, the Contractor shall protect such trees, plants, or shrubbery by wooden boxes, frames, or guards of sufficient strength to prevent any injury from machinery, trucks, or workmen during the prosecution of the work.

D-102.21 Payment. No pay item will be included in the proposal nor direct payment made for excavation and backfill. The cost for placing the material shall be included in the unit price bid for the specific work function.

SECTION 104
PVC WATER PIPE

D-104.01 GENERAL

1. Description

This work shall consists of the construction, complete in place of PVC Water Pipe as specified herein, and in conformity with the lines, grades, dimensions, materials, and design shown on the plans.

D-104.02 PRODUCTS

1. Polyvinyl Chloride Water Pipe

A. GENERAL

All polyvinyl chloride (PVC) water pipe shall of the rigid (UNPLASTICIZED) type and must bear the National Sanitation Foundation seal of approval for potable water pipe. Each joint of pipe shall consist of single continuous extrusion; bells or other components attached by solvent welding are not acceptable. Pipe shall be pressure rated at 305 psi (DR 14, C-900) as indicated.

Pipe shall have push-on, rubber joints of the bell and spigot type with thickened general bells with rubber gasket joints. The wall thickness of each pipe bell and joint coupling must be greater than the standard pipe barrel thickness. Clearance must be provided in every gasket joint for both lateral pipe deflection and for linear expansion and contraction. Concrete thrust blocking shall be placed behind bends and tees. Concrete support cradles or blocking shall be required for support of all fire hydrants, valves and AWWA C110 fittings; such support shall be provided for AWWA C153 fittings when required by the Engineer.

Pipe installed in any project must be manufactured within last twelve (12) months.

B. APPLICABLE SPECIFICATIONS

Except as modified or supplemented herein, PVC pipe shall meet the following standards:

-DR 14, C-900, Class 305 PVC Pipe to be used for installation of water mains 8” to 12” not deeper than 16 feet unless specifically identified in the plans. The use of 6” diameter is allowed for the Fire Hydrant assembly and other stubouts. All installation methods, testing procedures and backfilling requirements must be followed as per these specifications.

-Fittings used with PVC Pressure pipe shall be AWWA C-110 or AWWA C-153 compact ductile iron mechanical joint fittings manufactured in USA with 316 stainless steel bots, rods and nuts

.

-DR 21 for PVC Pressure Pipe, in 2 and 3 inches nominal size,

-DR 18, C905, Class 235, for water mains 16 to 24 inches nominal size. Any pipe greater than 24” requires a separate specification submittal.

Standard sizes, dimensions and tolerances shall be as follows:

Nominal Size (inches)	Outside Avg. (inches)	Diameter Tolerance (inches)	Wall Min. (inches)	Thickness Tolerance (inches)
6	6.900	+0.011	0.493	+0.046
8	9.050	+0.015	0.646	+0.060
12	13.200	+0.015	0.943	+0.088

All pipe 2" and larger must be approved Underwriter's Laboratories for use in buried water supply and fire protection systems.

Concrete steel cylinder pipe: Requires a separate submittal for review and approval by the Utilities Director

C. MATERIAL REQUIREMENTS
All pipe and fittings shall be made from clean, virgin, NSF approved, Class 12454B PVC free of defects. Clean reworked materials generated from the manufacturer's own production may be used within the current limits of the referenced AWWA C-900 or C-905.

D. MARKING
Permanent marking on each joint piece shall include the following at intervals of not more that 5 feet:
-Nominal pipe size and OD base (e.g., 4 CIPS)
-The type of plastic material (e.g., PVC 12454B)
-The Standard Dimension Ration and the pressure rating in psi for water at 73 F (e.g., DR 14, 200 psi).
-The AWWA designation with which the pipe complies (e.g., AWWA C-900).
-The manufacturer' s name or code and the National Sanitation Foundation (NSF) mark.
-Install the marking facing up.

E. TRACER TAPE
For all non-metallic pipe 8" and larger, directly above centerline of the pipe and approximately 18" below finished grade, shall be placed Conductive Tracer Detection Tape. The tape shall be encased in a protective, inert, plastic jacket and color coded in accordance with APWA Uniform Code.

D-104.03 EXECUTION

1. Excavation

Trench all shall be straight. The minimum with of trench excavation shall not be less than the internal diameter of the pipe plus twelve (12") inches. The pipe shall have a minimum cover

of 36" unless shown otherwise on the plans.

2. Embedment Using Gravel or Granular Material

Where rock shale or boulders are encountered in the trench, the same shall be removed to a depth of 6" below the grade line and the trench shall be refilled with sand, gravel, or up to the original grade and tamped into place. Where ground water is found, replace the backfill material with gravel or granular material as shown on the construction plans, otherwise, at least the bedding and primary backfill shall be replaced with gravel or granular material.

3. Pipe Laying

Pipe shall not be laid where the sub-grade is in a condition unsatisfactory to the Engineer. If sub-grade is soft, spongy, or disintegrated, the material shall be removed until a firm, stable and uniform bearing is reached and the sub-grade brought back to grade with suitable materials thoroughly compacted in place. Embedment for the pipe or the pipe itself will NOT be laid in water.

Where pipe is installed beneath railroad tracks, construction clearance to cross under railroad trackage shall be obtained by Contractor or facility owner from proper railroad authorities. Any expense of bracing or support to tracks during excavation operation beneath trackage shall be considered part of the contractor.

Where pipe shall be installed beneath State Highways, construction clearance and other requirements to cross under State Highways shall be obtained from State Highway District Engineer by facility owner.

Proper traffic control devices as per TMUTCD shall be placed and maintained to assure maximum traffic and pedestrian safety, or as directed by Local, Railroad, State Highway authorities or other governing agencies.

Owner will obtain all permits for construction, and will make a formal application for the right to cross canals, railroads, highways, pipe lines etc., Contractor must cooperate fully with all agencies involved while construction in areas controlled by such agencies.

Before pipe is laid, all dirt shall be removed from inside; and all lumps, blisters, excess coal tar, dirt, oil, and grease removed from both inside and outside of pipe.

After pipe is laid, care shall be taken to avoid entrance of dirt, water or small animals by use of tight bulk heads in all openings.

Contractor shall not leave more than 600 linear feet of open trench.

4. Service Saddles

Service saddles shall be of the un-hinged type on PVC Class 900 pipe (size 6" to 12"). The saddle body and bottom is to be of 85-5-5-5 solid brass or as per the latest regulations,

material as per ASTM B-62, single width with a minimum of two (2) silicone bronze bolts and a cc-thread.

Bronze saddles with bronze bolts must meet the latest revision of AWWA specifications for saddles to be used on Class 900 PVC pipes.

-Saddles 6" to 12" are to be Jones J-996, or approved equal.
-Saddles 14" to 16" are to be Jones J-979, or approved equal

On January 4, 2014 the water pipe, fittings and fixtures must comply with the S.3874 Reduction of Lead in Drinking Water Act SEC.2 (d) (1) (A) not containing more than 0.2 percent lead when used with respect to solder and flux and (B) not more than a weighted average of 0.25 percent lead when used with respect to the wetted surfaces of pipes, pipe fittings, plumbing fittings, and fixtures.

For tapping sleeve valves Stainless Steel Saddle including body , bolts and nuts shall be Type 316 as per ASTM A240M (to meet or exceed).

These specifications are not intended to eliminate any material or equipment of equal quality and purpose of that specified, but instead designed to set standards. If the contractor wishes to use equal material or equipment, he shall submit a sample and/or written proof of quality that substitute is of equal or better quality to Engineer and Water Utilities Engineer and shall function as these plans and specifications intend.

5. Pipe Joints

Manufacturer's recommendations shall be followed.

6. Pipe Restraints

- **Mechanical joints:** Refer to Section 132
- **Concrete Thrust Blocks**

Thrust blocks shall be made of concrete and shall only be used where specifically call for in the plans or otherwise indicated by the engineer or inspection, in addition to restraints when the pipe line changes direction, as at tees and bends; changes size, as at reducers (also some crosses and tees); stops, as at dead end; or is expected to develop thrust at valves. The dimensions of the thrust block shall be as per concrete mix used should be of a minimum strength of 2500 psi or as specified by Engineer, dimensions should be.

The size and type of thrust block depends on pressure, pipe size, kind of soil, and the type of fitting. View Concrete thrust block details Drawing No. 104.
Thrust based on 150 psi water pressure. Area based on 2,000 psf soil bearing

	TEE		90 BEND		45 BEND		22 1/2 BEND	
Pipe Size	Thrust (PSF)	Min. Reqd. Area (S.F.)	Thrust (PSF)	Min. Reqd. Area (S.F.)	Thrust (PSF)	Min. Reqd. Area (S.F.)	Thrust (PSF)	Min. Reqd. Area (S.F.)
6"	5700	3	8055	4	4365	2	2205	1
8"	9870	5	13950	7	7560	4	3825	2
10"	16125	8	22800	12	12360	6	6255	3
12"	22965	12	32460	16	17580	9	8910	5
14"	31155	16	44040	22	23865	12	12090	6
16"	40320	20	57015	29	30885	16	15645	8

7. Storage

Storage of PVC shall be in the shade or shall be covered with a suitable cover. PVC pipe shall not be exposed to the sun longer than 24 hours while being laid.

8. Hydrostatic Tests

All pipe lines constructed under this contract before being accepted shall be tested with a hydraulic test according to *Section 116"Hydrostatic Tests for Pressure Mains"*.

The cost of testing and finding leaks and repairing the same and re-testing, if necessary, shall be at the expense of the Contractor. The water required to fill the lines shall be furnished by the Contractor.

9. Line Disinfection

The completed water line shall be disinfected according to *Section 118"Disinfection of Potable Water Main*s".

The chlorinated water shall then be discharged from the water line and replaced with fresh potable water.

The Contractor will furnish all labor materials and equipment necessary to complete the proper disinfection of the line and the cost of this operation shall be included in the bid price for installation of the distribution system.

10. Measurement

PVC pipe will be measured for payment in linear feet along the center line of the trench. No

deduction will be made for valves and fittings.

11. Payment

PVC pipe will be paid for at the unit price per linear foot, complete in place, as provided in the proposal and contract. The contract price per linear foot shall be the total compensation for the furnishing of all labor, materials, tools, equipment, and incidentals necessary to complete work, including excavation, granular embedment material, backfill, and disposal of surplus materials, in accordance with the plans and these specifications.

SECTION 106
DUCTILE IRON PIPE

GENERAL

D-106.01 DESCRIPTION:

1. Scope: This section describes the manufacture, construction, and installation of ductile iron pipe and fittings.

D-106.02 QUALITY ASSURANCE: Reference Standards:

a. AWWA - C105, C110, C111, C115, C151, C153, C600, C651.
b. ASTM - C33, C150

D-106.03 SUBMITTALS:

1. Submit manufacturer's data on pipe furnished, indicating compliance with the Specifications regarding dimensions, thickness, weights, and materials. Where flanged pipe is called for, submit complete piping layout indicating the length of each flanged joint to be furnished.

PRODUCTS

D-106.04 DUCTILE IRON PIPE AND FITTINGS:

1. GENERAL:
   a. Ductile iron pressure pipe six inches (6") in diameter and larger shall conform to the current American National Standard Specifications for Ductile Iron Pipe, Centrifugally Cast in Metal Molds or Sand-Lined Molds, for Water or Other Liquids, AWWA C151 (A 21.51). The interior of the pipe shall be cement-mortar lining in accordance with the latest edition of ANSI/AWWA C104 Standard. All pipe shall be AWWA Class 150, or higher rated pipe.
   b. Ductile iron pipe less than six inches (6") in diameter shall be prohibited.

2. DESIGN REQUIREMENTS:
   a. The ductile iron shall conform in all respects to the Current Specification for Ductile Iron Castings, ASTM Designation A536.
   b. Thickness Class: Ductile iron pipe shall be Class 52 minimum unless otherwise shown on the plans.

3. JOINTS:
   a. All ductile iron pressure pipes shall be furnished with one of the following types of joints. Buried pipe shall be furnished with push-on or mechanical joint ends unless otherwise noted. Exposed pipe shall be flanged.

TYPE OF JOINT	REFERENCE STANDARD

Push-on Joint	AWWA C111
Mechanical Joint	AWWA C111
Flanged Ends	AWWA C110 & 115

b. All screwed flanges shall be ductile iron.
c. Provide restrained joint inside encasement.

4. COATING AND LINING: All ductile iron pipe and all fittings shall be bituminous coated outside in accordance with AWWA Standards, and polyethylene wrapped as per **D-106.10.**

5. UNDERWRITER'S APPROVAL: Ductile iron pipe shall be approved by the Underwriter's Laboratory and shall be accepted by the State Fire Insurance Board for use in water distribution systems without penalty. All pipes shall be new.

6. BOLTS AND NUTS: Bolts and nuts for pipe mechanical joints shall be Type 316 stainless steel. Flange bolts and nuts for above ground installation shall conform to Type 304 stainless steel. Flange bolts and nuts for below ground or in a vault or submerged installations shall be Type 316 stainless steel.

D-106.05 FLANGE GASKETS: Flange gaskets shall be full faced and conform to Appendix A of AWWA C115.

EXECUTION

D-106.06 EXECUTION: Lay all pipes in accordance with AWWA C600, except as modified herein.

D-106.07 PIPE LAYING AND JOINTING:

1. After the subgrade and embedment materials have been placed and the length of pipe has been placed in the trench, center the spigot in the bell and apply the pipe joint lubricant recommended by the pipe manufacturer. Force the spigot "home" using cables or excavating machinery. Use timbers to protect the bell of the joint from damage during jointing operation, especially when excavating machinery is used to force the pipe home.

2. Lay the pipe in such a fashion that the full length of the barrel of the pipe is resting on the embedment. Excavate bell holes so the bell of the pipe does not touch the bottom of the ditch. Take precautions to prevent dirt and embedment materials from entering the joint space. No blocking up of the pipe or joints will be permitted.

D-106.08 CUTTING OF PIPE: Saw cut pipe for closure pieces in a neat, workmanlike manner without damage to the pipe. Make each cut square to the centerline of the pipe and bevel the outside edge of the pipe at the cut to the same configuration and dimensions as the factory applied spigot level.

D-106.9 PROTECTION OF PIPE: At all times when pipe laying is not in progress, cover the open ends of the pipeline with a water tight cap to prevent water, debris, and animals from entering the pipe. Remove all foreign matter or dirt from the pipe during laying operations. Do not lay pipe in water or when trench conditions are unsuitable for such work.

D-106.10 POLYETHYLENE TUBE PROTECTION: All buried cast iron and ductile iron pipe and fitting shall be provided with polyethylene tube protection. Install polyethylene tube according to AWWA C105. Completely cover all fitting and connections with 8 mil (minimum) low density polyethylene film or 4 mil (minimum) cross laminated high-density polyethylene meeting ANSI/AWWA Specification C-105 current, with all edges and laps taped securely to provide a continuous and watertight wrap. Repair all punctures of the polyethylene, including those caused in the placement of bedding aggregates, with duct tape to restore the continuous protective rap before backfilling.

D-106.11 HYDROSTATIC TESTS: All pipe lines constructed under this contract before being accepted shall be tested with a hydraulic test according to *Section 116"Hydrostatic Tests for Pressure Mains"*.

The cost of testing and finding leaks and repairing the same and re-testing, if necessary, shall be at the expense of the Contractor. The water required to fill the lines shall be furnished by the Contractor.

D-106.12 LINE DISINFECTION: The completed water line shall be disinfected according to *Section 118"Disinfection of Potable Water Main*s".

The chlorinated water shall then be discharged from the water line and replaced with fresh potable water.

The Contractor will furnish all labor materials and equipment necessary to complete the proper disinfection of the line and the cost of this operation shall be included in the bid price for installation of the distribution system.

D-106.13 MEASUREMENT: Ductile Iron pipe will be measured for payment in linear feet along the center line of the trench. No deduction will be made for valves and fittings.

D-106.14 PAYMENT: Ductile Iron pipe will be paid for at the unit price per linear foot, complete in place, as provided in the proposal and contract. The contract price per linear foot shall be the total compensation for the furnishing of all labor, materials, tools, equipment, and incidentals necessary to complete work, including excavation, granular embedment material, backfill, and disposal of surplus materials, in accordance with the plans and these specifications.

SECTION 110
WATER VALVES

D 110.01 GENERAL

1. Description

This item to consist of valves furnished and installed as indicated. Unless otherwise indicated, all valves 4" and larger shall be AWWA type valves suitable design and fully equipped for service buried in earth, without need for further modification and shall be wrapped with 8 mil polyethylene film with all edges and laps securely taped to provide continuous wrap. Unless otherwise indicated, all valve stems shall be adjusted to situate the operating nut not less than 30" but not more than 36" below the proposed ground or paving surface of the finished project.

D 110.02 PRODUCTS

1. Materials

Contractor shall, as requested by the Utilities Director, submit descriptive information and evidence that materials and equipment Contractor proposes for incorporation into work is of the kind and quality that satisfies the specified functions and quality.

1. Iron Body Gate Valves, 6" to 12" shall comply with AWWA C509, resilient wedge gate valve.
2. Iron Body Gate Valves larger than 12", including Tapping Valve, shall conform to AWWA C515.
3. Stainless Steel Type 316 Tapping Sleeve:
    a. Mechanical Joint end outlet and neck conforming to type 316 Stainless steel. The valve inlet flange shall have a machined projection or raised face complying with MSS SP-60 for accurate alignment to the mating recess in the tapping sleeve flange. Seat rings and body casting shall be over-sized as required to accommodate full size cutters; the outlet end shall be constructed and drilled to allow the drilling machine adapter to be attached directly to the valve.
    b. Test plug ¾" NPT shall be stainless steel type 316
    c. Body, bolts, nuts shall be stainless steel type 316, nuts coated to prevent galling.
    d. SBR Body gasket to be full circumferential with hydro mechanical outlet seal, bridge plate to be stainless steel type 316.
4. Samples, Inspection and Testing Requirements.
   All tests and inspections called for by the applicable standards shall be performed by the manufacturer. Upon request, results of these tests shall be made available to the City.
5. Other Requirements:
   Each submittal shall be accompanied by:
   -Complete data covering the operator, including type and size, model number, etc., the manufacturer's name and address of his nearest service facility, the numbers of turns to fully open and close the valve, detailed instruction for calibrating the limit stops for open and closed positions and any other information which may be necessary to operate and maintain the operator.
   - Complete dimensional data and installation instructions for the valve assembly as it is to be installed, including the operator.

- Complete replacement parts lists and drawings, identifying every part from both the valve and operator.

2. Valves

1. a. *Stem* S*eals:* All valves shall be approved O-ring type stem seals. At least two O-rings shall be in contact with the valve stem where it penetrates the valve body. All Valves must open counter clock and close clock wise.

   b. *Operation:* All valves shall be approved O-ring type stem seals. At least two O-rings shall be in contact with the valve stem where it penetrates the valve body.

   c. *Gearing:* Valves shall gear and, when necessary for proper bury depth and cover, shall be horizontal bevel-geared type enclosed in a lubricated gear case.

   d. *Bypass*: Unless otherwise indicated, 16" and larger gate valve shall be equipped with a by pass of the non-rising stem type which meets the same AWWA standard required for the main valve.

   e. *Valve Ends:* Valve ends shall be push-on, flanged or mechanical joint, as indicted or approved.

   f. *Gear Case*: All geared valves shall have enclosed gear cases of the extended type, attached to the valve bonnet in a manner that makes it possible to replace the stem seal without disassembly and without disturbing the gears, bearing or gear lubricant. Gear cases shall be designed and fabricated with an opening to atmosphere so that water leakage past the stem seal does not enter the gear case.

   g. *Valve Body*: Valves in 16" and larger sizes installed in the horizontal position shall have bronze rollers, tracks, scrapers, etc.

   h. *Bolts:* The valves shall have bolts and nuts for the stuffing box and bonnet with the following compositions: type 316 stainless steel, nuts coated to prevent galling

   i. *Stem:* The valve stem shall be made of bronze ASTM B-132 alloy C67600 bar stock material. The stem shall have at least one "anti-friction" thrust washer above and below the stem collar to reduce operating torque. Valves with cast stems or two piece stem collars are not acceptable.

   j. *Body thickness:* The valve body, bonnet, stuffing box, and disc shall be composed of ASTM A-126 Class B grey iron or ASTM A395. The body and bonnet shall also adhere to the minimum wall thickness as set forth in Table 2, section 4.3.1 of AWWA C509.

   k. *Resilient wedge:* The valve disc and guide lugs must be fully encapsulated in SBR ASTM D2000 rubber material. Guide caps of an acetal bearing material shall be placed over solid guide lugs to prevent abrasion and to reduce the operating torque.

   l. *Coatings:* The valves shall have all internal and external ferrous surfaces coated with a fusion bonded thermosetting powder epoxy coating of 10 mils nominal thickness. The coating shall conform to AWWA C550.

   m. The valve type shall be NRS (non-rising stem) or OS&Y (outside screw & yoke) as specified

   n. The valve shall have an arrow cast on the operating nut or hand wheel showing opening direction. The direction of opening shall be as specified.

   o. The NRS valves shall be provided with a 2” square operating nut and OS&Y valves shall be provided with a hand wheel. The bolt that attaches the operating nut to the stem shall be recessed into the operating nut so as not to interfere with valve wrench operation.

   m. *Warranty:* The valves shall be warranted by the manufacturer against defects in materials or workmanship for a period of ten (10) years from the date of manufacture. The manufacturing facility for the valves must have current ISO certification.

D 110.03 EXECUTION

1. Construction Methods

1. *Setting Valves*
   Unless otherwise indicated, main valves, blow-off valves and piping shall be set and jointed in the manner described for cleaning, laying, and jointing pipe.

   Unless otherwise indicated, valves shall be set at the locations shown on the drawings as piping is being laid and such that their location does not conflict with other appurtenances such as curb ramps. A concrete or steel support shall be provided for each valve Valves shall be installed so the tops of operating stems will be at the proper elevation required for the piping at the location indicated above but not exceeding 5ft. in depth. Valve boxes and valve stem casings shall be firmly supported and maintained, centered and aligned plum over the valve or operating stem, with the top of the box or casing installed flush with the finished ground or pavement in existing streets, and installed with the top of the box or casing approximately 6" below the standard street subgrade in streets which are excavated for paving construction or where such excavation is scheduled or elsewhere as directed by the Engineer.

2. *Protective Covering*
   Unless otherwise indicated, all flanges, nuts, bolts, threaded outlets and all other steel component shall be coal tar coated and shall be wrapped with standard 8 mil (minimum) low density polyethylene film or 4 mil (minimum) cross laminated high-density polyethylene meeting ANSI/AWWA Specification C-105 current, with all edges and laps taped securely to provide a continuous and watertight wrap. Repair all punctures of the polyethylene, including those caused in the placement of bedding aggregates, with duct tape to restore the continuous protective rap before backfilling.

3. *Valve Box, Casing and Cover*.
   Stems of all buried valves shall be protected by valve box assemblies. Valve box castings shall conform to ASTM A48, Class 30B. Testing shall be verified by the manufacturer. Valve box extension shall be as per manufacturer recommendations. Valve boxes shall be two piece, cast iron, screw type. The drop cover shall be lettered "WATER". A 24"x24”x6” thick minimum concrete collar around the valve box shall be provided.

D 110.04 MEASUREMENT

All types of valves will be measured per each complete assembly.

D 110.05 PAYMENT

Payment shall be full compensation in accordance with the pay item seen in the bid, for excavation, furnishing, hauling and placing valves and barrel extensions including all incidental and subsidiary material and work; preparing, shaping, dewatering, shoring of trenches, bedding, placing, adjusting to grade, couplings, sleeves, concrete support, joint restraints, valve stem extenders, concrete collars complete in place, and compacting backfill materials and for all other incidentals necessary to complete the installation, as indicated, complete in place.

SECTION 116
HYDROSTATIC TESTS FOR PRESSURE MAINS

D-116.01 GENERAL

1. Summary

A. Measurement and Payment
   1. Separate payment will not be made for hydrostatic testing of water mains. Include costs for testing, repair of defects, and retesting required in this section in appropriate unit prices bid for water line construction.

   2. The costs associated with purchase of water to fill proposed lies for flushing, disinfecting, chlorination, dechlorination, and hydrostatic testing shall be paid by the Contractor. Said costs shall be subsidiary to the unit price bid for construction of appropriate size of water line.

2. Quality Assurance

A. Contractor shall perform hydrostatic tests on water lines in accordance to AWWA C600-93 and these specifications. Hydrostatic test must be performed in the presence of the City of Laredo Utilities Inspector.

3. Submittals

A. Submit in accordance with the Standard General Conditions and Supplementary Conditions.
B. Copies of all testing results shall be submitted to the Engineer prior to acceptance of piping system.

D-116.02 PRODUCTS

1. Water

A. Water used to fill proposed lines, for flushing, for disinfection, and testing of lines shall be potable water from the City of Laredo. Contractor shall coordinate and contract with the City for a temporary construction meter to be located off an existing fire hydrant, if available; otherwise a temporary fire hydrant shall be furnished by the Contractor.

D-116.03 EXECUTION

1. General

A. Conduct pressure and leakage tests in accordance with Section 3 of AWWA C600 of these specifications. Contractor must notify City of Laredo Utilities Engineer 48 hours prior to pressure and leakage testing.
B. Commence test procedures when following conditions met.
   1. Pipe section to be tested is clean and free of dirt, sand, or other foreign material.
   2. Pipe outlets plugged with test plugs. Plugs, pipes, fittings, and valves secured to prevent blowouts.
   3. Value of applied test pressure checked at each point in test section to ensure it does not exceed maximum allowable pressure of pipes, valves, fittings, and

appurtenances.

C. Safety: Perform pressure testing in accordance with OSHA requirements and in manner protecting worker, bystanders, and adjacent property.

D. Correct leaks defects, and retest until acceptable results obtained.

D-116.04 PRESSURE TESTS

A. Test pressures shall be as follows:
   1. Water Main Test Pressure: 150 psi at highest elevation in test section.

B. Test Procedure:
   1. Add water to expel air.
   2. Pressurizing equipment shall include regulator set to avoid over pressurizing and damaging otherwise acceptable line.
   3. Make test connection, subject main to normal water pressure, and examine for leaks.
   4. Apply test pressure by means of force pump of design and capacity that required pressure can be applied and maintained without interruption for duration of test.
   5. Measure test pressure by means of tested and properly calibrated pressure gauge.
   6. Maintain initial test pressure for sufficient length of time to permit inspecting piping under test, but not less than 30 min.
   7. In case repairs are required, repeat pressure test until pipe installation conforms to specified requirements.
   8. Perform final test at required test pressure for 4 hrs.

C. Water main considered to have failed pressure test if applied pressure drops 1 psi.

D-116.05 LEAKAGE TEST

A. Conduct pressure test and initial leakage test concurrently. Final leakage test may be waived by Engineer if found unnecessary to add water during duration of final pressure test.

B. Leakage defined as quantity of water to be supplied into newly laid pipe, or section thereof, necessary to maintain specified leakage test pressure after main has been filled with water and entrapped air expelled.

   1. Leakage shall not exceed number of gph as determined by following formula for rubber-sealed joints.

$$L = \frac{ND(P)^{1/2}}{7{,}400}$$

Where:

L= allowable leakage in gallons per hour
N= number of joints under test
D= nominal diameter of main in inches
P= average pressure in lbs./sq. in. gauge during leakage test

2. If section under test contains joints of various diameter allowable leakage will be sum of computed leakage for each size of joint.

C. Test Procedure:

1. Submit test section to approximately 150 psi gauge pressure at highest elevation of water main under test.
2. Conduct final leakage test for 4 hours.
3. Repair defects and retest until acceptable results obtained.

D-116.06 MEASUREMENT AND PAYMENT

There will no separate measurement or payment for Hydrostatic Tests for Pressure Mains, all cost shall be included in the various bid items involved.

SECTION 120
CONCRETE ENCASEMENT, CRADLES, SADDLES, AND COLLARS

D-120.01 DESCRIPTION: This Item shall govern for placing concrete encasement, cradles, saddles, and collars, when called for the Project plans or as directed by the Engineer.

D-120.02 MATERIALS: Concrete: All concrete shall, at a minimum, conform to the provisions of TxDOT Specifications, (Item 421) 2004 edition or latest revision , "Concrete" (Class B) or shall be of the class noted on the plans.

D-120.03 CONSTRUCTION METHODS:

1. **Concrete Encasement:** When concrete encasement is show on the plans or when directed by the Engineer, the trench shall be excavated and fine graded to a depth conforming with details and sections shown on the plans. The pipe shall be supported by precast concrete blocks of the same strength as the concrete for encasement and securely tied down to prevent floatation. Encasement shall then be placed to a depth and width conforming with details and sections shown on the plans.

2. **Concrete Cradles:** When concrete cradles are shown on the plans or when called for by the Engineer, the trench shall be prepared and the pipe supported in the same manner as described in this specification and shall be constructed in accordance with details and sections shown on the plans.

3. **Concrete Saddles:** When shown on the plans or when directed by the Engineer, pipe to receive concrete saddle shall be backfilled in accordance with TxDOT (Item No. 402) "Excavation, Trenching, and Backfill" to the spring line and concrete placed for a depth and width conforming with details and sections shown on the plans.

4. **Concrete Collars:** When shown on the plans or when directed by the Engineer, concrete collars shall be constructed in accordance with details and sections shown on the plans.

D-120.04 MEASUREMENT: "Concrete Encasement, Cradles, Saddles, and Collars", will be measured by the cubic yard of accepted work, complete in place. Reinforcing, if required, shall not be measured for payment.

D-120.05 PAYMENT: There will be no separate payment for Concrete Encasement, Cradles, Saddles, and Collars; all materials, manipulation, labor, tools, equipment, and incidentals necessary to complete the work shall be included in the various bid items involved.

SECTION 128
DISPOSAL OF WASTE MATERIAL AND SALVAGEABLE MATERIAL

D-128.01 GENERAL: Section includes disposal of waste material and salvageable material.

D-128.02 SUBMITTALS:

A. Obtain and submit disposal permits for proposed disposal sites if required by local ordinances, TCEQ and/or EPA.

B. Submit a copy of written permission from a property owner, along with description of property prior to disposal of excess material adjacent to the Project. Submit a written and signed release from property owner upon completion of disposal work.

EXECUTION

D-128.03 SALVAGEABLE MATERIAL:

Excavated Material: when indicated on plans, load haul, and deposit excavated material at a location or locations shown on plans outside the limits of project.

Base, Surface, and Bedding Material: Local shell, gravel, bituminous, or other base and surfacing material designated for salvage.

Pipe Culvert: Load culverts designated for salvage into designated trucks.

Other Salvageable Materials: Conform to requirements of individual specification section.

Coordinate disposal of material with Environmental Services Director.

D-128.04 EXCESS MATERIAL:

A. Vegetation, rubble, broken concrete, debris, asphaltic concrete pavement, excess soil, and other materials not designated for salvage, shall become property of the Contractor and shall be removed from the job site and legally disposed of.

B. Excess soil may be deposited on private property adjacent to the project when written permission is obtained from property owner. See Paragraph 128.02B above.

C. Waste materials shall be removed from the site on a daily basis, such that the site is maintained in a neat and orderly condition.

D-128.05 MEASUREMENT AND PAYMENT: There will be no separate payment for waste material disposal; all materials, manipulation, labor, tools, equipment, and incidentals necessary to complete the work shall be included in the various bid items involved.

SECTION 130
DUCTILE IRON FITTINGS

D-130.01 DESCRIPTION: This item shall consist of grey-iron and ductile-iron fittings installation and adjustment installed in accordance with these specifications and as directed by the Engineer.

D-130.02 MATERIALS AND CONSTRUCTION:

1. Fittings: All fittings shall conform to American Water Works Association (AWWA) Standards for Grey-Iron and Ductile-Iron Compact Fittings, and AWWA Standard C-153 for Ductile Iron Compact Fittings, Class D, manufactured in the USA. Fittings 6 inches through 24 inches in size shall be mechanical joint type unless otherwise specified on the plans. Fittings shall be installed with the thrust blocking and/or joint restraint, as shown in the plans. Adapters shall be used where necessary to provide a transition between asbestos-cement pipe and the fittings. All bolts and nuts shall be stainless steel type 316, nuts coated to prevent galling. Ductile Iron Fittings and restraints shall be wrapped with standard 8 mil (minimum) low density polyethylene film or 4 mil (minimum) cross laminated high-density polyethylene meeting ANSI/AWWA Specification C-105 current, with all edges and laps taped securely to provide a continuous and watertight wrap. Repair all punctures of the polyethylene, including those caused in the placement of bedding aggregates, with duct tape to restore the continuous protective rap before backfilling.

2. Cleaning Ductile-Iron: All lumps, blisters, and excess coal-tar coating shall be removed from the ends of cast-iron fittings. The outside of the spigot and the inside of the bell shall be wire-brushed and wiped clean, dry, and free from oil and grease before the pipe is laid. The interior of the pipe shall be blown clean with compressed air or swabbed out clean and dry as directed by the Engineer. Immediately prior to placing any pipe in the trench, the interior shall be cleaned by an approved brush or swab or with compressed air to remove all dirt and foreign materials. All pipe and fittings shall be suspended above ground to be inspected for defects by the Contractor.

D-130.04 MEASUREMENT: Ductile-Iron Fittings will be measured per each complete assembly.

D-130.05 PAYMENT: Payment for Cast-Iron and Ductile Iron Compact Fittings will be included in the unit price bid for all types and sizes installed. Such payment shall also include excavation, selected embedment material, anticorrosion embedment when specified, backfilling, hauling and disposition of surplus excavated materials, polyethylene wrapping, asphaltic material for ferrous surfaces, all glands, nuts, bolts, gaskets and concrete reaction and thrust blocking and joint restraint systems.

SECTION 132
PIPE JOINT RESTRAINT SYSTEMS

D 132.01 GENERAL

1. Description

This specification covers pipe joint restraint systems to be used on domestic water mains for PVC C-900 pipe sizes 4-inch through 12- inch diameter and PVC C-905 pipe sizes 16- inch through 24- inch diameter, and for Ductile Iron pipe sizes from 4-inch through 24-inch diameter. Joint restraint systems are classified as "mechanical joint" or non- metallic restrained joint "for the specific type of pipe joint to be restrained.

D 132.02 PRODUCTS

1. General Requirements

A. Underwriter Laboratories (U.L) and Factory Mutual (FM) certifications are required on all restraint systems.

B. Unless otherwise noted, restraint systems to be used on PVC C-900 and C-905 pipe shall meet or exceed A.S.T.M. Standard F1674-96, "Standard Test Methods for Joint Restraint Products for Use with PVC Pipe," or the latest revision thereof and shall be made in USA only. Restraint systems used on ductile pipe shall meet or exceed U.L. Standard 194 and shall be made in USA only.

C. Non-metallic restrained joint pipe and couplings shall be utilized specifically for C-900 PVC pipe and fittings in sizes 4"-12", and for C-905 PVC pipe and fittings in size 16".

D. Each restraint system shall be packaged individually and include installation instructions.

E. Each restraint system shall be wrapped with 8 mil. of polyethylene film with all edges and laps securely taped to provide continued wrap.

2. Specific Requirements:

A. Restrainer for PVC C-900/C-905 & Ductile Iron Push-on Type Connections:

1. Pipe restraints shall be utilized to prevent movement for push-on D.I. or PVC (C900&C905) (compression type) bell and spigot pipe connections or where a flexible coupling has been used to join two sections of plain-end pipe D.I. or PVC (C900&C905). The restrainer may be adapted to connect a plain end D.I. or PVC pipe to a ductile iron mechanical joint (MJ) bell fitting. The restrainer must not be directionally sensitive.

2. The pipe shall be restrained by a split retainer band. The band shall be cast ductile iron, meeting or exceeding ASTM A536-80, Grade 65-45-12. The inside face or contact surface of the band shall be of sufficient width to incorporate cast or machined non-directionally sensitive serration to grip the outside circumference of the pipe. The serration shall provide full (360 degrees) contact and maintain pipe roundness and avoid any localized points of stress. The split band casting shall be designed to "bottom-out" before clamping bolt forces (110ft-lb minimum torque) can over-stress the pipe, but will provide full non-directionally sensitive restraint at the rated pressures.

3. All T-head bolts, nuts and restraining rods shall be 316 Stainless Steel. Nuts coated to prevent galling.

4. The split ring type non-directionally sensitive restrainer system shall be capable of a test pressure twice the maximum sustained working pressure listed in section D and be for both D.I. and/or PVC C900.

5. Restraint systems sizes six through twelve inches shall be capable of use for both ductile iron and/or PVC C900.

6. The restraint system may consist of two types: the two split retainer rings and for new construction use only the one split and one solid cast backup ring.

B. Non-metallic restrained joint pipe and couplings for PVC C-900/C-905 Type Connections:

1. Gasketed restrained coupling connections shall join two sections of factory grooved PVC (C900/C-905) pipe, NSF 61. The restrainer coupling must not be directionally sensitive.

2. The coupling shall incorporate twin elastomeric sealing gaskets meeting the requirements of ASTM F-477 and shall be DR-14 Class 305 C-900 for 4" -12" pipe, meeting or exceeding the performance requirements of AWWA C-900, latest revision; and DR-18 C-905 for 16" pipe, meeting or exceeding the performance requirements of AWWA C-905, latest revision . The inside face or contact surface of the coupling connection shall be of sufficient width to incorporate a factory machined non-directionally sensitive groove in both pipe and coupling to grip the outside circumference of the pipe. The couplings shall provide full (360 degrees) contact and maintain pipe roundness and avoid and localized points of stress. The coupling shall be designed with an internal stop to align the precision-machined grooves in the coupling and pipe prior to installation of a non- metallic thermoplastic restraint spleen, and will provide full non-directionally sensitive restraint at the rated pressures.

3. High-strength flexible thermoplastic spleens shall be inserted into mating precision –machined grooves in the pipe and coupling to provide full non-directional restraint with evenly distributed loading.

4. The non- metallic restrained joint pipe and couplings for PVC C-900/C-905 type non-directionally sensitive restrainer system shall be capable of a test pressure twice the maximum sustained working pressure and be for PVC: C-900 pipe sizes four (4) through twelve (12) inch, and C-905 pipe size sixteen (16) inch.

5. Non-metallic restrained joint pipe and couplings for PVC C-900 restrained systems sizes four (4) through twelve (12) inches shall be capable of use for both (DR 18) and four (4) through eight (8) inches for (DR 14) PVC C900 pipe. Non-metallic restrained joint pipe and couplings for PVC C-905 restrained systems size sixteen (16) inches shall be capable of use for (DR 18) PVC C905 pipe.

6. The non- metallic restrained joint pipe and couplings for PVC C-900 restraint system and for PVC C-905 restraint system shall consist of a pipe and couplings system produced by the same manufacturer meeting the performance qualifications of Factory Mutual (FM) and Underwriters Lab (UL).

D. Fitting Restraint for Ductile Iron Pipe (Only):

1. Radial bolt type restrainer systems shall be limited to ductile iron pipe in conjunction with Mechanical Joint (MJ) bell end pipe of fittings. The system shall utilize a standard MJ gasket with a ductile iron replacement gland conforming to ASTM A 536-80. The gland dimensions shall conform to Standard MJ bolt circle criteria.

2. Individual wedge restrainers shall be ductile iron heat treated to a minimum hardness of 370 BHN. The wedge screws shall be compressed to the outside wall of the pipe using a shoulder bolt and twist-off nuts to insure proper actuating of the restraining system.

3. All bolts, nuts and restraining rods shall be 316 Stainless Steel. Nuts coated to prevent galling.

4. Standard MJ gasket shall be virgin SBR meeting ASTM D-2000 3 BA 715 or 3 BA 515.

E. Maximum Sustained Working Pressure Requirements:

Nominal Diameter	PVC C-900 / C-905	Ductile Iron
4 & 6 inch	305 psi	350 psi
8 inch	305 psi	250 psi
10 & 12 inch	305 psi	200 psi

14 & 16 inch	235 psi	200 psi
20 & 24 inch	235 psi	200 psi

3. Tests:

The City of Laredo Utilities Department may, at no cost to the manufacturer, subject random joint restraint system products to testing by an independent laboratory for compliance with these standards. Any visible defect of failure to meet the quality standards herein will be ground for rejecting the entire order.

4. Product List:

The attached qualified product list identifies specified manufacturers models approved for installation in City of Laredo water distribution systems.

Recommended Manufacturers and Models: (Subject to Review & Approval by City of Laredo)

A. Slip on Joint Restraint Systems:

MANUFACTURER	MATERIAL		
	PVC C-900/C-905	**Ductile Iron**	**D.I. 16" Above**
Ford/Uni-Flange (4″ - 16″)	1390C	1390C	1390C
EBBA Iron Sales, Inc (4″ -12″)	1500	1700	1700
Romac Industries, Inc. (4″ - 8″)	Model 611	Model 611	470SJ

B. Non-Metallic Restrained Joint Pipe and Couplings for PVC C-900/C-905 RJ Type Connections:

Certain Teed Corporation, Certa-Lok C-900/RJ
4" – 12" Class 305 (DR-14)

Certa-Lok C-905/RJ
16" Class 235 (DR-18)

D. Fitting Restraint (MJ):

MANUFACTURER	MATERIAL	
	PVC C-900/C-905, DR-14/DR-18	**Ductile Iron**
EBBA Iron Sales, Inc.	2000 PV (Only C-900)	Megalug1100
Ford/Uni-Flange	UFR-1500-C 14”- 24”	Series 1400
Star Pipe Products (Domestic)	StarGrip Series 4000 (3”-12”)	StarGrip Series 3000 (3”-12”)

E. Restrained Flange Adapters:

MANUFACTURER	MATERIAL	
	PVC C-900	**Ductile Iron**
EBBA Iron Sales, Inc.	2100 Megaflange	2100 Megaflange
Ford/Uni-Flange	900	200, 400, 420

D 132.03 MEASUREMENT AND PAYMENT: There is no pay item for joint restraint systems. The cost of furnishing and installing joint restraints shall be included with and considered fully subsidiary to the unit bid price of the items that they restrain: pipe, valves, fittings, Etc.

SECTION 134
FLOWABLE BACKFILL
(Controlled Low Strength Material)

D-134.1 Description: Furnish and place flowable backfill for trench, hole, or other void without consolidation.

D-134.2 Materials.

A. Cement. Furnish cement conforming to **D-504.02**

B. Fine Aggregate. Provide fine aggregate that will stay in suspension in the mortar to the extent required for proper flow and that meets the gradation requirements of the aggregate gradation chart below.

Sieve Size	Percent Passing
3/4 in.	100
No. 200	0–30

Test fine aggregate gradation in accordance with Tex-401-A. Plasticity Index (PI) must not exceed 6 when tested in accordance with Tex-106-A.

C. Mixing Water. Use mixing water conforming to the requirements of TxDot Item 421, "Hydraulic Cement Concrete."

D-134.3. Construction. Submit a construction method and plan, including mix design and shrinkage characteristics of the mix, for approval. Provide a means of filling the entire void area, and be able to demonstrate that this has been accomplished. Prevent the movement of any inserted structure from its designated location. If voids are found in the fill or if any of the requirements are not met as shown on the plans, remove and replace or correct the problem without additional cost to the City of Laredo. Unless otherwise shown on the plans, furnish a mix meeting the requirements of Sections**134.3.A**, "Strength," and **134.3.B**, "Consistency."

A. Strength. The 28-day compressive strength range, when tested in accordance with Tex-418-A, must be between 80 psi and 150 psi unless otherwise directed. Two specimens are required for a strength test, and the compressive strength is defined as the average of the breaking strength of the 2 cylinders.

B. Consistency. Design the mix to be placed without consolidation and to fill all intended voids. Fill an open-ended, 3-in.-diameter-by-6-in.-high cylinder to the top to test the consistency. Immediately pull the cylinder straight up. The correct consistency of the mix must produce a minimum 8-in.-diameter circular spread with no segregation.
When necessary, use specialty type admixtures to enhance the flowability, reduce shrinkage, and reduce segregation by maintaining solids in suspension.

Mix the flowable fill using a central-mixed concrete plant, ready-mix concrete truck, pug mill, or other approved method. Cure test specimens in accordance with Tex-447-A. The laboratory will sample, make, and test all specimens.

D-134.4 Placement

The controlled low strength material shall be placed directly into the excavation. The CLSM shall be placed in a uniform manner that will prevent voids in or segregation of the material. Foreign material which falls into the trench prior to and during placing of the CLSM shall be immediately removed. The CLSM shall have consistency, workability, plasticity, flow characteristics and pumpability (when required) such that the material when placed is self-compacting.

Mechanical compaction or vibration may be used to consolidate around structures, pipes, multiple conduits, etc. when directed by the engineer, otherwise no mechanical compaction or vibration shall be required.

When CLSM is used for backfill around water or sanitary sewer pipes install zero PI sand or gravel 12" above the top of the pipe. When CLSM is used for backfill around conduits,, the CLSM shall be placed equally on both sides of conduit to prevent lateral displacement. Also, the CLSM shall be placed in lifts. The height of each lift shall not exceed the depth that will cause floating of the pipe or conduit. When placing the CLSM in greater lift depths, sufficient anchorage shall be provided so the pipe or conduit will not float.

The minimum clear distance between the outside of the pipe or conduit and the side of the excavation (each side) shall be 12 inches

When CLSM is used behind retaining walls, the depth of each lift shall be limited so it will not induce hydraulic loads greater than the design loads.

For long trenches or installations which require a large amount of CLSM, bulkheads of wood, dirt, sand bags, etc. can be used to control the material's flowability. The bulkhead shall be removed prior to the continuation the backfilling.

A minimum of 24 hours shall elapse prior to backfilling the remaining portion of the trench with other backfill material in accordance with Section102, "Excavation and Backfill for Utilities".

D-134.5 Measurement: This item will be measured by the cubic yard of material placed when indicated as a separate pay item. Measurement will not include additional volume caused by slips, slides, or cave-ins resulting from contractor's operations.

D-134.6 Payment: When indicated as a separate pay item, the materials furnished and work performed will be paid for at the unit price bid as measured. This price is full compensation for furnishing, hauling, placing the materials, equipment, tools, labor, and incidentals. When the Project Manual, plans or other specifications indicate the use of flowable backfill as incidental to another pay item, no direct payment for the material will be made.

SECTION 136
CEMENT-STABILIZED BACKFILL

D-136.1. Description: When shown on the plans, backfill the excavation to the bottom of pavement base with cement-stabilized sand or caliche.

D-136.2 Materials:

- **A.** Cement: Cement shall consist of Type I Portland Cement conforming to ASTM C150
- **B.** Sand: Zero P.I. sand as aggregate for cement-stabilized backfill. Use only approved aggregate up to the bottom of existing pavement section base.
- **C.** Caliche
- **D.** Water: Water shall be clean and clear, free of oils, acids, alkalis, organic matter or other deleterious substances and shall conform to the requirements of ASTM C94.

D-136.3 Execution:

Sand/caliche-cement Mixture Product. The mixture shall consist of a minimum of two (2) sacks of Portland cement per cubic yard based on the dry weight of the aggregate. The mixture shall contain sufficient water to hydrate the cement (not flowable).

The cement, sand/caliche and water shall be mixed in a pugmill type mixer, which meets the approval of the Engineer. It shall be mixed for a minimum period of two minutes per batch.
No mixing will be allowed on street surface.

D-136.4 Placement:

Place cement-stabilized backfill equally along the sides of structures to prevent strain on or displacement of the structure. Fill voids when placing cement-stabilized backfill. Use hand operated tampers if necessary to fill voids.

The sand cement mixture shall be placed in maximum eight (8) inch thick lifts, loose measure, and thoroughly rodded and tamped around the pipe, boxes, structures, bridge approaches and paving sections. Placement and compaction shall be performed in a manner that will thoroughly fill all voids without placing undue strain on or displacement of the structure.

Cement stabilized sand backfill below the top of sewers, manholes, inlets or other structures shall be placed equally along all sides of the structure. Cement stabilized sand backfill/bedding shall be placed in a manner that will completely fill all voids in the trench. Should compaction be required to fill all voids in the areas described, hand operated tampers may be used.

Materials not placed and not compacted within four (4) hours after mixing shall be rejected.

Do not place or compact sand/caliche-cement mixtures in standing or free water.

D-136.5 Performance:
Random samples of the delivered product will be taken in the field at the direction of the Engineer and tested. A minimum of one (1) sample per week or job shall be taken at random to represent a production that is less than one hundred (100) tons per week. Two (2) samples per week shall be taken at random to represent a production greater than one hundred (100) tons per week. The Engineer shall have the option to obtain additional samples for testing.

D-136.6 Measurement: When specified or shown on the plans as a pay item will be measured by the cubic yard. Measurement will not include additional volume caused by slips, slides, or cave-ins resulting from contractor's operations

D-136.6 Payment: When indicated as a separate pay item, the materials furnished and work performed will be paid for at the unit price bid as measured. This price is full compensation for furnishing, hauling, placing the materials, equipment, tools, labor, and incidentals. When the Project Manual, plans or other specifications indicate the use of cement stabilized sand as incidental to another pay item, no direct payment for the material will be made.

Docusign Envelope ID: A678F31C-3478-4023-B6AE-88589750B41C

FED.RD. DIV.NO.	FEDERAL AID PROJECT NO.		SHEET NO.
6	DMO 2012 (628)		1
STATE	DIST.	COUNTY	
TEXAS	LRD	WEBB	
CONT.	SECT.	JOB	HIGHWAY NO.
0922	33	076	CS

INDEX OF SHEETS
(REFER TO SHEET 2 FOR INDEX)

CONSTRUCTION PLANS
FOR
LAS CRUCES REALIGNMENT

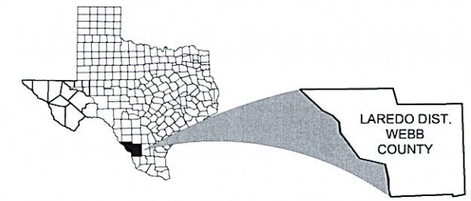

PROJECT NO.: DMO 2012 (628)

CONTROL NO.: 0922-33-076

LIMITS: FROM:Intersection of FM 1472 and Flecha Lane
TO: 0.174mi East of FM 1472

NEW CONSTRUCTION OF: Realignment of Flecha Ln/Las Cruces Along FM 1472 (Mines Rd)

FOR WORK CONSISTING OF: Grading, Base, Structure, Surface, Pavement Markings, etc

NET LENGTH OF PROJECT = 916.27LF = 0.174MI
Roadway = 766.95LF = 0.145MI
Bridge = 149.33LF = 0.029MI

CITY OF LAREDO

MAYOR

Honorable Dr. Victor D. Treviño, Mayor

Gilbert Gonzalez
Council Member
District I

Ricardo Richie Rangel, Jr.
Council Member
District II

Melissa R. Cigarroa
Council Member
District III

Ricardo "Rick" Garza
Council Member
District IV

Ruben Gutierrez, Jr
Council Member
District V

Dr. David Tyler King
Council Member
District VI

Vanessa Perez
Mayor Pro Tempore
District VII

Alyssa Cigarroa
Council Member
District VIII

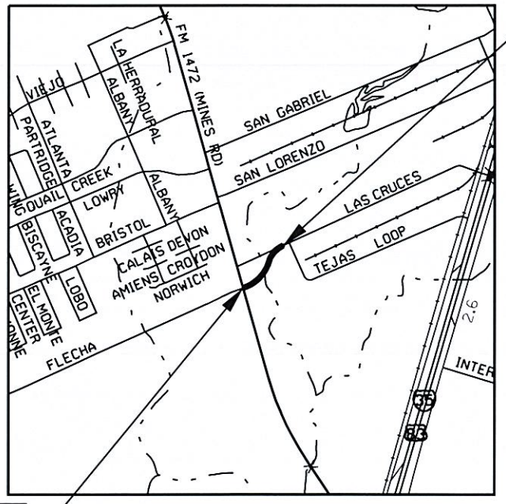

END PROJECT
CSJ: 0922-33-076
STA 20+71.00
REF MRK:

BEGIN PROJECT
CSJ: 0922-33-076
STA 11+54.73
REF MRK:

NOT TO SCALE

FUNCTIONAL CLASS: MAJOR COLLECTOR
AREA OF DISTURBED SOIL = 3.01 AC
DESIGN SPEED = 30 MPH
ADT = 7,200 (2026), 9,800 (2046),
% TRUCK = 14.1 (TXDOT)
EXCEPTIONS: NONE
EQUATIONS: NONE
RAILROADS: NONE

TDLR INSPECTION REQUIRED
TDLR No. 2025013714

KCI TECHNOLOGIES, INC.
2806 W. BITTERS RD. - SUITE 218
SAN ANTONIO, TX 78248 - 210.641.9999
TEXAS REGISTERED ENGINEERING FIRM
TBPE FIRM No. F-10573
www.kci.com

KCI

KYLE GASS, P.E. PROJECT MANAGER

APPROVED BY:

Ramon E. Chavez for JOSEPH NEEB
CITY MANAGER

DATE: 08/01/2025

APPROVED BY:

Signed by: ELIUD DE LOS SANTOS
5680697668A9457...
ELIUD DE LOS SANTOS, P.E.
CITY ENGINEER

DATE: 8/1/2025

SPECIFICATIONS ADOPTED BY THE TEXAS DEPARTMENT OF TRANSPORTATION, SEPTEMPER 1, 2025 AND SPECIFICATION ITEMS LISTED AND DATED AS FOLLOWS, SHALL GOVERN ON THIS PROJECT: REQUIRED CONTRACT PROVISIONS FOR ALL FEDERAL-AID CONSTRUCTION CONTRACTS (FORM FHWA 1273, OCTOBER 23, 2023).

Texas Department of Transportation

COUNTY WEBB
HWY. NO. CS
DATE ACCEPTED

PROJECT NO. DMO 2012 (628)
LETTING DATE

PLOTTED ON: 7/31/2025 @ 3:44:39 PM DESIGN FILENAME: X:\data\txdot\Projects\359700_LasCruces_Flecha\WestLaredoCorridor\!\GENERAL\LasCruces_TitleSht.dgn

SHEET NO.	GENERAL
1	TITLE SHEET
2	INDEX OF SHEETS
3	PROJECT LAYOUT
4	PROJECT CONTROL SHEET
5 - 6	TYPICAL SECTIONS
7 - 13	GENERAL NOTES
14	TCP AND SW3P SUMMARY
15	REMOVAL SUMMARY
16	ROADWAY & GRADING SUMMARY
17	EARTHWORK SUMMARY
18	DRAINAGE & BRIDGE SUMMARY
19	TRAFFIC SIGNAL & ILLUMINATION SUMMARY
20	PAVEMENT MARKING SUMMARY
21	SMALL SIGN SUMMARY

SHEET NO.	TRAFFIC CONTROL PLAN
22	SCHEDULE OF TRAFFIC CONTROL AND ADVANCED WARNING DEVICES
23	TRAFFIC CONTROL PLAN SEQUENCE OF WORK PHASE 1
24 - 25	TRAFFIC CONTROL PLAN SEQUENCE OF WORK PHASE 2
26	TRAFFIC CONTROL PLAN SEQUENCE OF WORK PHASE 3
27	TCP PHASE 2 DETOUR LAYOUT
28	TCP PHASE 3 DETOUR LAYOUT
29	TEMPORARY SIGNAL LAYOUT PHASE 1
30	TEMPORARY SIGNAL LAYOUT PHASE 2
31	TEMPORARY SIGNAL LAYOUT PHASE 3
32 - 33	STORMWATER POLLUTION PREVENTION PLAN (SW3P)
34	ENVIRONMENTAL PERMITS, ISSUES AND COMMITMENTS (EPIC)

SHEET NO.	TRAFFIC CONTROL AND SW3P STANDARDS
35 - 46	*BC(1 THRU 12)-21
47	*WZ(TD)-17
48	*WZ(UL)-13
49 - 50	*WZ(BTS-1& BTS-2)-13
51	*WZ(RCD)-13
52	*TCP(1-2)-18
53	*TCP(2-4)-18
54	*TCP(2-5)-18
55	*TCP(3-1)-13
56	*TCP(3-3)-14
57	*TCP(7-1)-13
58 - 59	*LPCB-13
60	*EC(1)-16
61	*EC(2)-16
62	*EC(3)-16
63	*WZ(STPM)-23
64 - 65	***REVEGETATION NOTES & SPECIFICATION

SHEET NO.	ROADWAY DETAILS
66 - 67	HORIZONTAL & VERTICAL ALIGNMENT DATA
68	REMOVAL ITEMS & UTILITY LAYOUT
69 - 70	PLAN & PROFILE SHEETS
71	INTERSECTION LAYOUT
72	LAS CRUCES CULDESAC
73	FM 1472 (MINES RD) LEFT TURN LANE
74 - 75	DRIVEWAY DETAILS
76 - 77	MISCELLANEOUS ROADWAY DETAILS

SHEET NO.	ROADWAY STANDARDS
78 - 81	*TYPE C1W - 19
82 - 83	*RAC - 20
84 - 87	*PED - 18
88	*SGT (12S) 31 - 18
89 - 90	*GF (31) TR TL3 - 20
91	*GF (31) DAT - 19
92	*TAU (M) (N) - 19

SHEET NO.	DRAINAGE DETAILS
93	CULVERT DRAINAGE AREA MAP
94	CULVERT DISCHARGE CALCULATIONS
95 - 97	CULVERT HYDRAULIC DATA SHEET
98	BRIDGE CLASS CULVERT LAYOUT
99	CHANNEL GRADING LAYOUT
100	INTERIOR DRAINAGE AREA MAP
101	STORM DRAIN CALCULATIONS
102 - 103	STORM DRAIN PLAN AND PROFILE
104	STORM DRAIN LATERALS

SHEET NO.	DRAINAGE STANDARDS
105	*MC-MD
106 - 107	*MC-10-7
108 - 109	*SRR
110	*SSPC
111	*BCS
112	*PW
113	*PB
114	*PBGC
115	*PJB
116	*PDD
117	*PRM
118 - 119	*PCO
120	*CGT-PCO
121	**TRAFFIC INLET TYPE X-1 THRU X-6

SHEET NO.	TRAFFIC ITEMS
122	SUMMARY OF TRAFFIC SIGNAL QUANTITIES
123	EXISTING SIGNAL LAYOUT
124	PROPOSED SIGNAL LAYOUT
125	PROPOSED SIGNAL DETAILS
126	PROPOSED TRAFFIC SIGNAL ELEVATIONS
127	ILLUMINATION LAYOUT

SHEET NO.	TRAFFIC STANDARDS
128	*TS-FD-12
129 - 133	*LMA(1)-12 THRU LMA(5)-12
134	*ED(1)-14
135 - 143	*ED(3)-14 THRU ED(11)-14
144	*MA-C-12
145	*MA-D-12
146	*TS-CF-21
147	*CFA-12
148	*WV & IZ-14
149	*TS-BP-20
150	*LUM-A-12

SHEET NO.	SIGNING & PAVEMENT MARKING DETAILS
151 - 154	SIGNING AND PAVEMENT MARKINGS LAYOUT

SHEET NO.	PAVEMENT MARKINGS, SMALL SIGNS AND DELINEATION STANDARDS
155	*SMD(GEN)-08
156 - 158	*SMD(SLIP-1,2,3)-08
159	*SMD(TWT)-08
160	*SMD(FRP)-08
161 - 163	*PM(1-3)-22
164	*D & OM(1) - 20
165	**TWL TL (1) - 22
166 - 167	**TWL TL (3 & 4) - 21

SHEET NO.	ROADWAY AND CHANNEL CROSS SECTIONS
168 - 180	LAS CRUCES ROADWAY CROSS SECTIONS
181 - 185	LAS CRUCES CHANNEL CROSS SECTIONS

SHEET NO.	WATER PLANS
186	WATER SUMMARY
187	WATER LINE PLAN & PROFILE
188	MISCELLANEOUS DETAILS 102-1& 104-6

* TXDOT STANDARDS
** SAN ANTONIO DISTRICT STANDARDS
*** LAREDO DISTRICT STANDARDS

THE STANDARD SHEETS SPECIFICALLY IDENTIFIED ABOVE, HAVE BEEN SELECTED BY ME OR UNDER MY SUPERVISION AS BEING APPLICABLE TO THIS PROJECT.

7/31/2025

LAS CRUCES REALIGNMENT

INDEX OF SHEETS

SHEET 1 OF 1

KCI TECHNOLOGIES, INC.
2806 W. BITTERS RD. - SUITE 218
SAN ANTONIO, TX 78248 - 210.641.9999
TEXAS REGISTERED ENGINEERING FIRM
TBPE FIRM No. F-10573
www.kci.com

Texas Department of Transportation

FED.RD. DIV.NO.	FEDERAL AID PROJECT NO.		SHEET NO.
6	DMO 2012 (628)		2
STATE	DIST.	COUNTY	
TEXAS	LRD	WEBB	
CONT.	SECT.	JOB	HIGHWAY NO.
0922	33	076	CS

PLOTTED ON: 7/31/2025 @ 3:49:18 PM DESIGN FILENAME: X:\data\txdot\Projects\359700_LasCruces_Flecha\WestLaredoCorridorII\GENERAL\LasCruces_INDEX.dgn

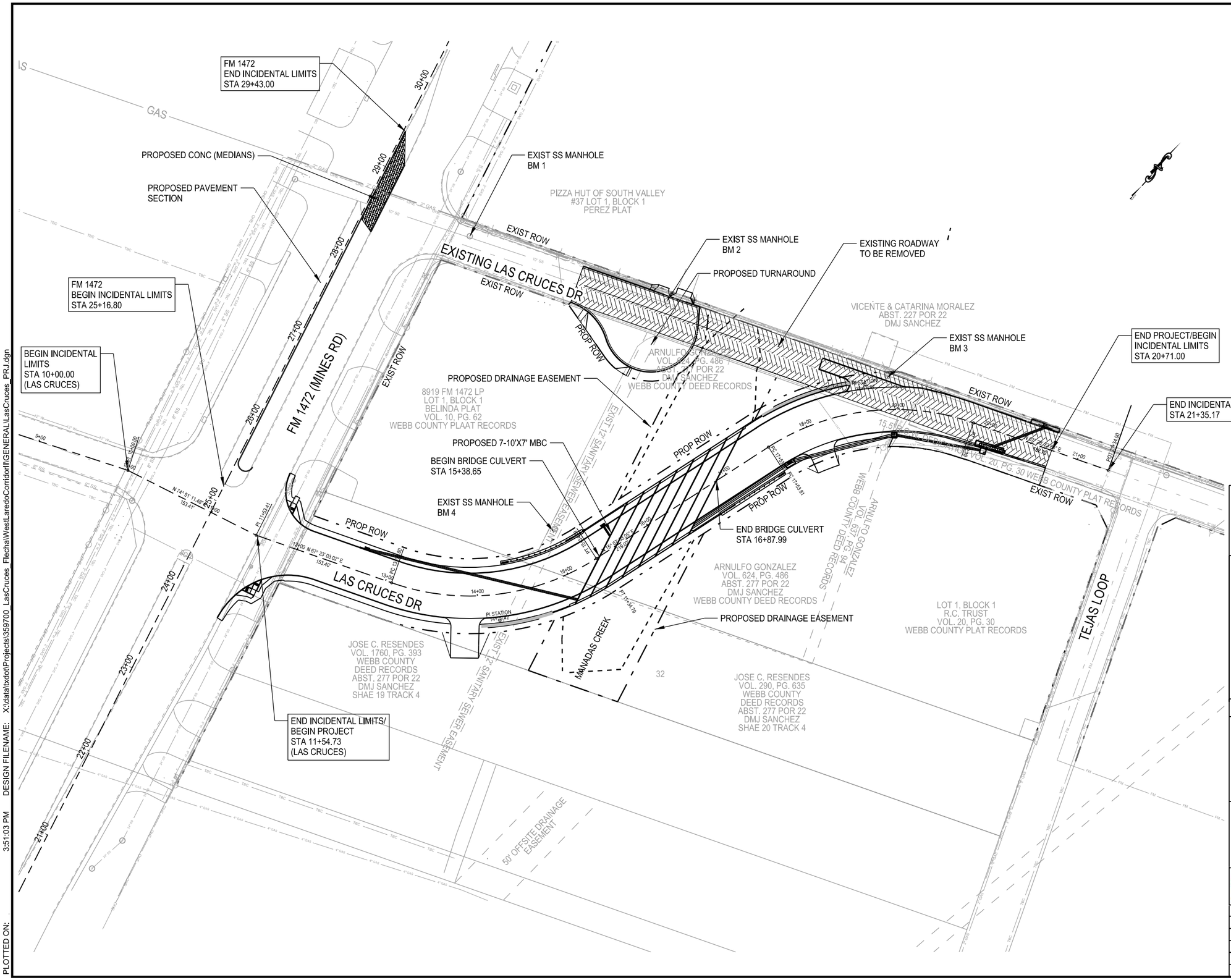

STATE OF TEXAS
KYLE GASS
94833
LICENSED
PROFESSIONAL ENGINEER

KYLE GASS, P.E.
7/31/2025

LAS CRUCES REALIGNMENT

PROJECT LAYOUT

SHEET 1 OF 1

KCI TECHNOLOGIES, INC.
2806 W. BITTERS RD. - SUITE 218
SAN ANTONIO, TX 78248 - 210.641.9999
TEXAS REGISTERED ENGINEERING FIRM
TBPE FIRM No. F-10573
www.kci.com

Texas Department of Transportation

FED.RD. DIV.NO.	FEDERAL AID PROJECT NO.		SHEET NO.
6	DMO 2012 (628)		3
STATE	DIST.	COUNTY	
TEXAS	LRD	WEBB	
CONT.	SECT.	JOB	HIGHWAY NO.
0922	33	076	CS

PLOTTED ON: 3:51:03 PM DESIGN FILENAME: X:\data\txdot\Projects\359700_LasCruces_Flecha\WestLaredoCorridor\GENERAL\LasCruces_PRJ.dgn

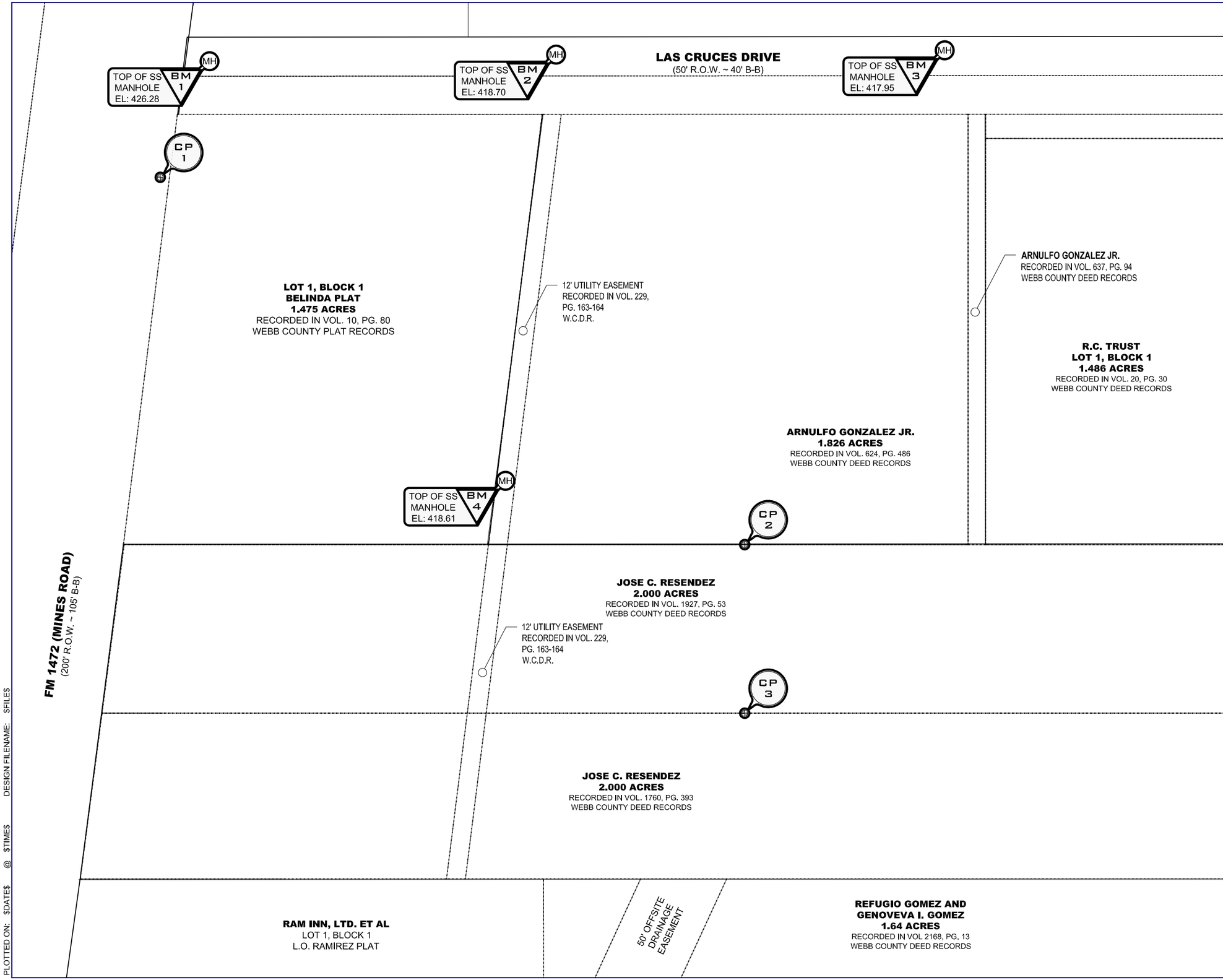

CONTROL DATA

NO.	NORTHING	EASTING	ELEVATION
1	17102135.1180	657373.9830	424.98
2	17102062.1044	657809.4740	–
3	17101962.5647	657850.9406	–

BENCH MARK DATA

NO.	NORTHING	EASTING	ELEVATION
1	17102215.7930	657374.5640	426.28
2	17102304.9680	657577.5850	418.70
3	17102403.0890	657806.0220	417.95
4	17102040.9140	657652.5130	418.61

NOT TO SCALE

STATE OF TEXAS REGISTERED
JEFFREY G. PUIG
5961
PROFESSIONAL LAND SURVEYOR
02/27/2025

LAS CRUCES REALIGNMENT

PROJECT CONTROL SHEET

KCI TECHNOLOGIES, INC.
2806 W. BITTERS RD. - SUITE 218
SAN ANTONIO, TX 78248 - 210.641.9999
TEXAS REGISTERED ENGINEERING FIRM
TBPE FIRM No. F-10573
www.kci.com

Texas Department of Transportation

FED.RD. DIV.NO.	FEDERAL AID PROJECT NO.		SHEET NO.
6	DMO 2012 (628)		4
STATE	DIST.	COUNTY	
TEXAS	LRD	WEBB	
CONT.	SECT.	JOB	HIGHWAY NO.
0922	33	076	CS

PLOTTED ON: $DATE$ @ $TIME$ DESIGN FILENAME: $FILE$

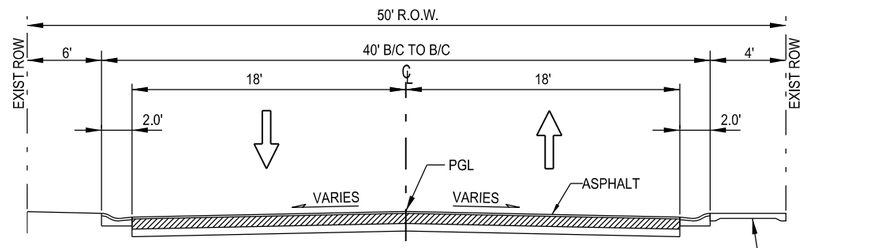

EXISTING TYPICAL SECTION

STA 11+54.33 TO STA 16+04.31

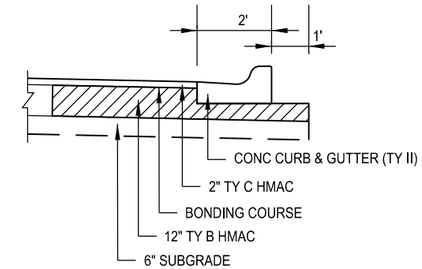

DETAIL "A"

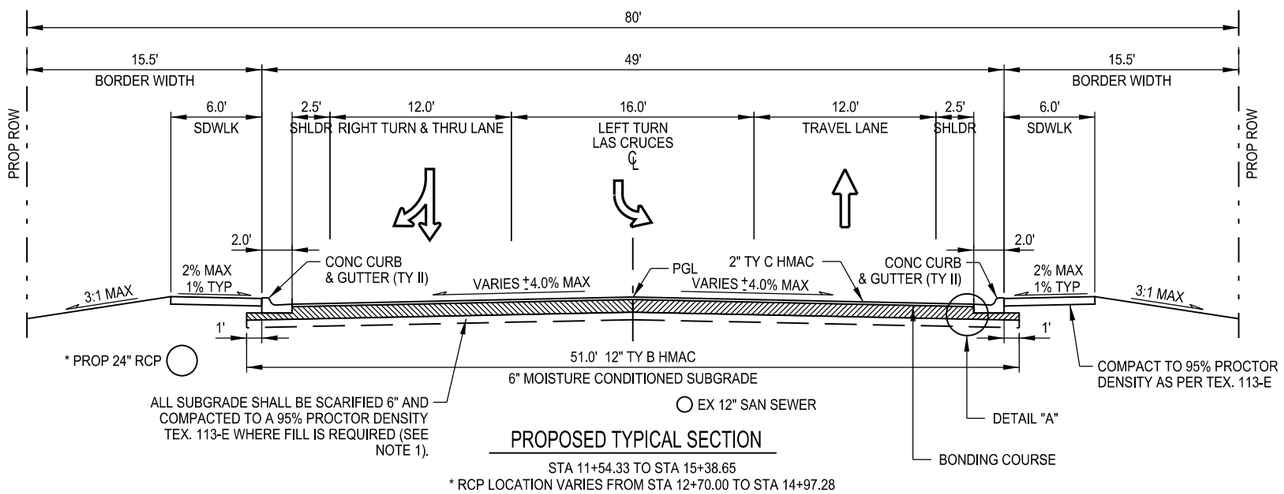

PROPOSED TYPICAL SECTION

STA 11+54.33 TO STA 15+38.65
* RCP LOCATION VARIES FROM STA 12+70.00 TO STA 14+97.28

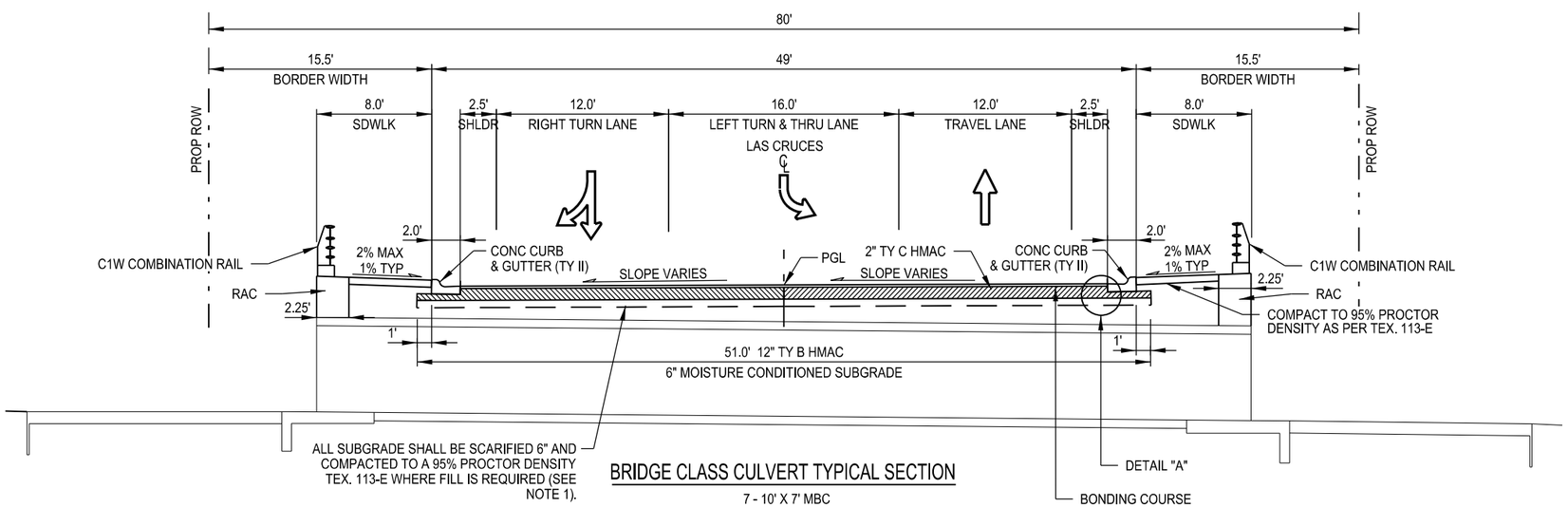

BRIDGE CLASS CULVERT TYPICAL SECTION

7 - 10' X 7' MBC
STA 15+38.65 TO STA 16+87.99

NOTES:

1. CONTRACTOR TO GRADE AND COMPACT AREA BEHIND CURB ON BOTH SIDES OF STREET TO THE PROPERTY LINE UNLESS OTHERWISE DESIGNATED BY THE ENGINEER IN THE FIELD.
2. FOR CONTRACTOR'S INFORMATION, THE HMAC QUANTITIES ARE BASED ON TY C: 115#/SY/IN AND TY B: 120#/SY/IN.
3. BONDING COURSE APPLICATION RATE IS 0.07 GAL/SY.
4. UTILITIES SHOWN AT ASSUMED LOCATIONS. CONTRACTOR TO VERIFY LOCATION AND DEPTH PRIOR TO CONSTRUCTION.

GRAPHIC SCALE
(IN FEET)
30 15 0 5 10 15
1" = 10'

STATE OF TEXAS
KYLE GASS
94833
LICENSED
PROFESSIONAL ENGINEER

KYLE GASS, P.E.
7/31/2025

LAS CRUCES REALIGNMENT

TYPICAL SECTIONS

SHEET 1 OF 2

KCI TECHNOLOGIES, INC.
2806 W. BITTERS RD. - SUITE 218
SAN ANTONIO, TX 78248 - 210.641.9999
TEXAS REGISTERED ENGINEERING FIRM
TBPE FIRM No. F-10573
www.kci.com

Texas Department of Transportation

FED.RD. DIV.NO.	FEDERAL AID PROJECT NO.		SHEET NO.
6	DMO 2012 (628)		5
STATE	DIST.	COUNTY	
TEXAS	LRD	WEBB	
CONT.	SECT.	JOB	HIGHWAY NO.
0922	33	076	CS

PLOTTED ON: 7/31/2025 @ 3:51:29 PM DESIGN FILENAME: X:\data\txdot\Projects\359700_LasCruces_Flecha\WestLaredoCorridor\GENERAL\LasCruces_TYP_01.dgn

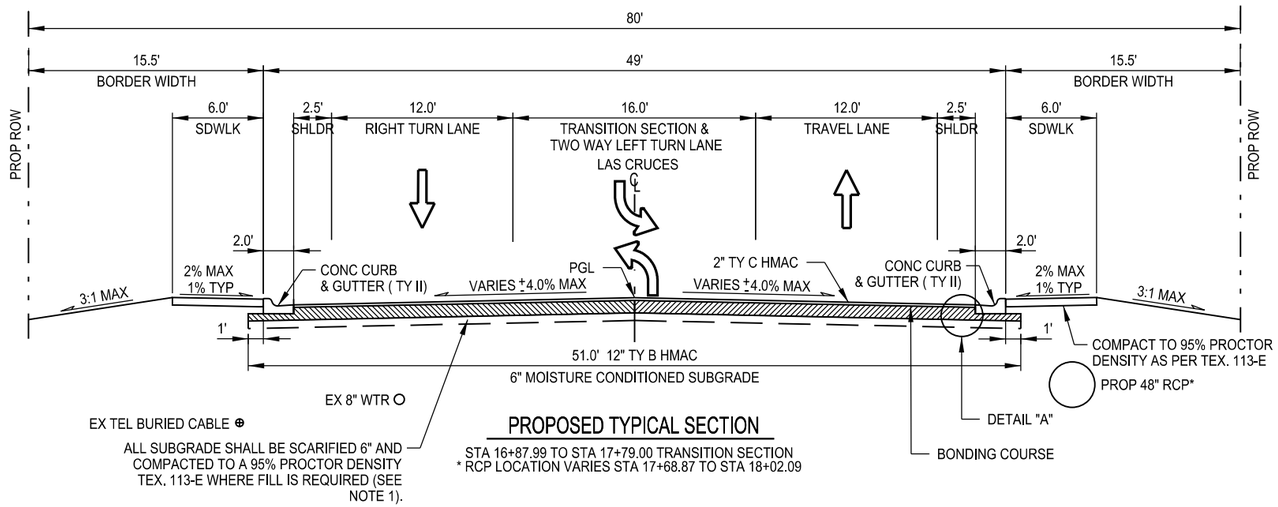

PROPOSED TYPICAL SECTION

STA 16+87.99 TO STA 17+79.00 TRANSITION SECTION
* RCP LOCATION VARIES STA 17+68.87 TO STA 18+02.09

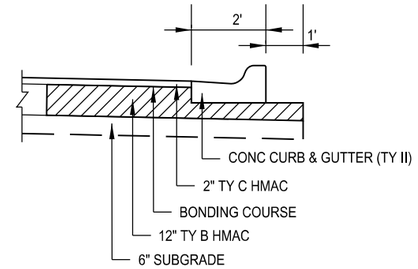

DETAIL "A"

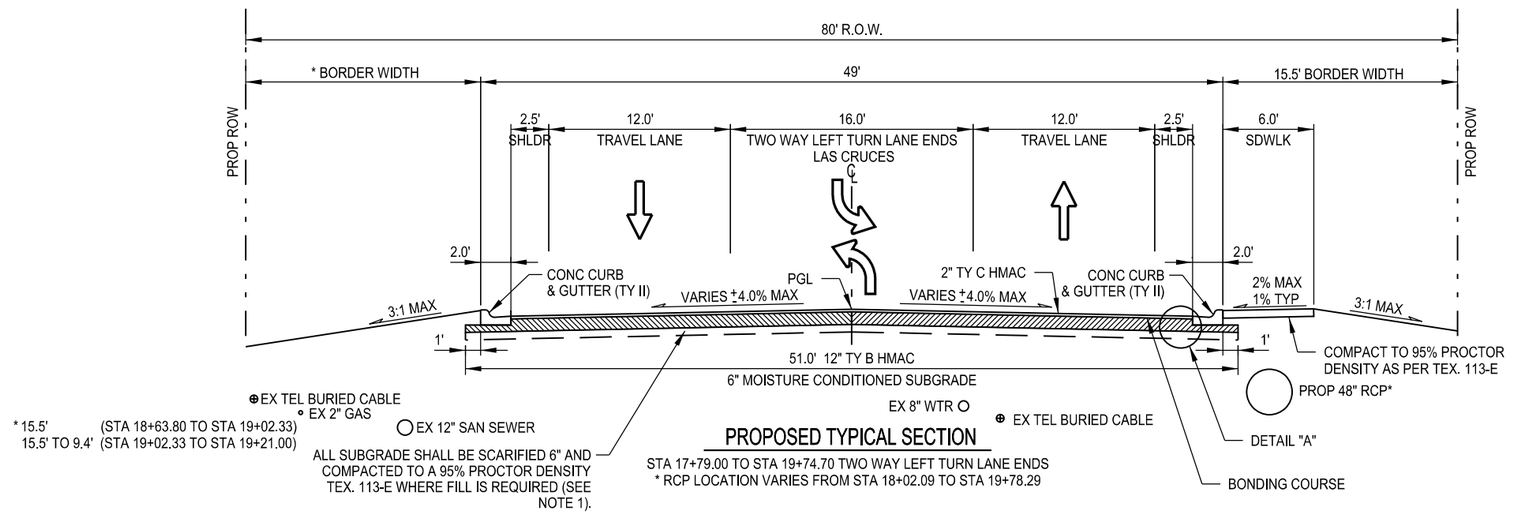

PROPOSED TYPICAL SECTION

STA 17+79.00 TO STA 19+74.70 TWO WAY LEFT TURN LANE ENDS
* RCP LOCATION VARIES FROM STA 18+02.09 TO STA 19+78.29

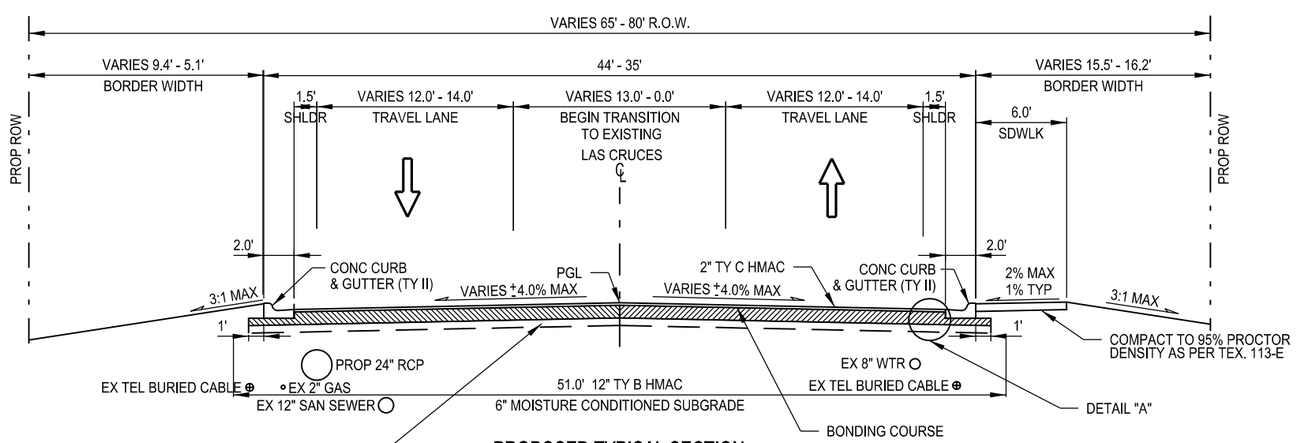

PROPOSED TYPICAL SECTION

STA 19+74.70 BEGIN TRANSITION TAPER TO EXISTING CONDITIONS

NOTES:

1. CONTRACTOR TO GRADE AND COMPACT AREA BEHIND CURB ON BOTH SIDES OF STREET TO THE PROPERTY LINE UNLESS OTHERWISE DESIGNATED BY THE ENGINEER IN THE FIELD.
2. FOR CONTRACTOR'S INFORMATION, THE HMAC QUANTITIES ARE BASED ON TY C: 115#/SY/IN AND TY B: 120#/SY/IN.
3. BONDING COURSE APPLICATION RATE IS 0.07 GAL/SY.
4. UTILITIES SHOWN AT ASSUMED LOCATIONS. CONTRACTOR TO VERIFY LOCATION AND DEPTH PRIOR TO CONSTRUCTION.

GRAPHIC SCALE
(IN FEET)
30 15 0 5 10 15
1" = 10'

STATE OF TEXAS
KYLE GASS
94833
LICENSED
PROFESSIONAL ENGINEER

KYLE GASS, P.E.
7/31/2025

LAS CRUCES REALIGNMENT

TYPICAL SECTIONS

SHEET 2 OF 2

KCI TECHNOLOGIES, INC.
2806 W. BITTERS RD. - SUITE 218
SAN ANTONIO, TX 78248 - 210.641.9999
TEXAS REGISTERED ENGINEERING FIRM
TBPE FIRM No. F-10573
www.kci.com

Texas Department of Transportation

FED.RD. DIV.NO.	FEDERAL AID PROJECT NO.		SHEET NO.
6	DMO 2012 (628)		6
STATE	DIST.	COUNTY	
TEXAS	LRD	WEBB	
CONT.	SECT.	JOB	HIGHWAY NO.
0922	33	076	CS

PLOTTED ON: 7/31/2025 @ 3:51:49 PM DESIGN FILENAME: X:\data\txdot\Projects\359700_LasCruces_Flecha\WestLaredoCorridorII\GENERAL\LasCruces_TYP_02.dgn

GENERAL NOTES:

1. All construction and materials to be in accordance with 2024 TxDOT STANDARD SPECIFICATIONS FOR CONSTRUCTION AND MAINTENANCE OF HIGHWAYS, STREETS, AND BRIDGES with any revisions thereto, and any Special Specifications issued for the Project unless otherwise specified.

2. No extra payments shall be allowed for work called for on the plans, but not included on the bid schedule. This incidental work will be required and shall be included in the pay item to which it relates.

3. Conflicts in the plans and/or specifications found by the contractor shall be promptly reported to the inspector before proceeding with construction.

4. Bidders are hereby notified to make subsurface investigations as they deem necessary. No additional payment shall be made for rock, sand, gravel or other unstable conditions encountered in street excavation, box culvert excavation, structural excavation, channel excavation, or unforeseen circumstances.

5. The contractor shall limit work activities to the streets rights-of-way and easements. No provisions have been made for work activities or storage materials and/or equipment on private property.

6. The contractor shall preserve all construction stakes, markers, etc. Any construction stakes, markers, etc., removed by the contractor or the contractor's employees shall be replaced at the contractor's expense.

7. Due to Ferderal Regulations Title 49, Part 192.181, gas utility owners must maintain access to gas valves at all times. The contractor must protect and work around any gas valves that are in the Project Area.

8. During the construction, the contractor shall be responsible for maintenance of fencing. Damaged fencing shall be replaced with equal or better materials and workmanship. The contractor shall coordinate with the landowner for work withing private property. Easement fences may be removed and replaced as required. It shall be the contractor's' responsibility to maintain and set up temporary fencing for livestock as necessary for all phases of work. No sperate payment shall be made for maintaining fencing.

9. Tree removal necessitated by contractor activities will be the responsibility of the contractor and will be subsidiary to Preparation Right-of-way.

Item 5 - Control of the Work

The Contractor shall maintain and preserve the integrity of all "existing survey markers" by avoiding the disturbance of such markers; which include all control points (horizontal and/or vertical), stakes, marks, and right-of-way markers. The Department will repair all Contractor disturbed control points, stakes, marks, and right-of-way markers. The cost for any and all repairs to the "existing survey markers" will be deducted from money due or to become due to the Contractor.

Place temporary asphalt around the manholes and/or valves to provide a minimum of 50:1 taper when manholes and/or valves are exposed to traffic. The cost of the elevation adjustment and asphalt tapers will not be paid for directly, but will be subsidiary to the price bid for other manhole and/or valve work.

Prior to construction must call 811 to verify any utilities located within project limits. Contractor will also coordinate with utility owners listed below for any adjustments needed to sanitary sewer manholes, water valves, gas valve, telecommunication, television manhole located within project limits. The utility company is responsible for any adjustment when necessary. The work should be performed in a manner as to not delay construction contractor work activity.

Contractor will make necessary arrangements with the utility owner(s) when utility adjustments are required, as a result of construction activities.

Item 7 - Legal Relations and Responsibilities

For all pits or quarries, comply with the "Texas Aggregate Quarry and Pit Safety Act."

Upon completion of all work provided in the contract for any individual project, the Engineer will make an inspection. If it is found to be satisfactory, the Contractor will be released from further maintenance on that individual project. Such partial acceptance will be made in writing and will in no way void or alter any terms of the contract.

If an abandoned-in-place natural gas pipeline is encountered and has to be removed, wrapped steel gas pipelines will be assumed to contain asbestos, unless analytical testing of the wrap material determines that the wrap material contains less than 1 % asbestos, as determined using the Polarized Light Microscopy (PLM) Method. Observe and comply with all federal, state and local laws, ordinances and regulations regarding the management of asbestos containing materials. At a minimum, the following procedure will be used whenever an existing wrapped steel gas pipe has to be removed (for whatever reason) during construction operations.

1. Notify the Engineer
2. As soon as the pipe is removed, cover and secure the ends of the pipe with a double layer of 6 mil plastic, then move it to a secure temporary storage site (approved by the Engineer) within the project limits. Care will be taken to avoid damage to the plastic and if damaged, replace before further handling of the pipe. If the wrapping of the pipe is damaged, the entire pipe will be covered with plastic.

LAS CRUCES REALIGNMENT

GENERAL NOTES

SHEET 1 OF 7

KCI TECHNOLOGIES, INC.
2806 W. BITTERS RD. - SUITE 218
SAN ANTONIO, TX 78248 - 210.641.9999
TEXAS REGISTERED ENGINEERING FIRM
TBPE FIRM No. F-10573
www.kci.com

Texas Department of Transportation

FED.RD. DIV.NO.	FEDERAL AID PROJECT NO.		SHEET NO.
6	DMO 2012 (628)		7
STATE	DIST.	COUNTY	
TEXAS	LRD	WEBB	
CONT.	SECT.	JOB	HIGHWAY NO.
0922	33	076	CS

PLOTTED ON: 7/31/2025 @ 3:52:20 PM DESIGN FILENAME: X:\data\txdot\Projects\359700_LasCruces_Flecha\WestLaredoCorridor\IGENERAL\LasCruces_GEN_NOTES_ALL.dgn

3. The Engineer will determine the owner (utility company) of the gas line to coordinate removal of the pipe from the project. If the owner of the gas pipe cannot be determined, the Engineer will make arrangements to transport the pipe off the project. The Contractor will not be responsible for removing the pipe from the project.
4. The removal of the steel gas pipe from the trench is subsidiary to the work that created the need to remove the pipe (structural excavation, roadway excavation, removal and replacement of the pipe, etc.). The work performed in handling the pipe after it has been removed (covering with plastic, hauling to a secure storage within the project, and loading onto the transportation vehicle for removal from the project) will be paid for through the extra work order process.

If an existing asbestos Cement (AC) pipe is encountered and has to be removed, observe and comply with all federal, state and local laws, ordinances and regulations regarding the management of asbestos containing materials. At the minimum, work involving AC pipe should be overseen by a person who has received asbestos training and is familiar with the National Emissions Standards for Hazardous Air Pollutants (NESHAP). If greater than 260 linear feet of pipe is to be removed, written notification to the Texas Department of State Health Services (DSHS) 1 0 days prior commencing with the removal of AC pipe is required. At each location shown in the plans and/or identified during construction to involve AC pipe, remove the necessary amount of AC pipe without creating any friable material. For tie-ins remove whole sections of AC pipe at the nearest joint. Remove the AC pipe and store it in a secure (Engineer approved) location for pick up by the owner of the utility. Prior to performing this work, notify the Engineer and the owner of the utility of the work schedule 48 hours in advance of beginning the work.

Jurisdictional Waters of the United States and Project Specific Locations (PSL) Coordination - This project requires permit(s) with environmental resource agencies. There is a high probability that environmentally sensitive areas will be encountered on contractor designated project specific locations (PSLS) for the project (including but not limited to haul roads, equipment staging areas, parking areas, etc.).

Requirements for Work within Jurisdictional Waters of the United States:

The department has been authorized to perform work within designated areas of the project under U.S. Army Corps of Engineers (USACE) nationwide permit (NWP) #14 and/or #3a and/or #3b.

The contractor will not initiate activities in a project specific location (PSL) associated with a U.S. Army Corps of Engineers (USACE) permit area (i.e. an area where the USACE has jurisdiction) that has not been previously evaluated by the USACE as part of the permitting for this project. Such activities include, but are not limited to, haul roads, equipment staging areas, borrow and disposal sites. Associated defined here includes materials delivered to or from the PSL. The permit area includes all waters of the U.S. and their associated wetlands affected by activities associated with this project. Special restrictions may be required for such work in these USACE jurisdictional areas. The contractor will be responsible for any and all consultations with the USACE regarding activities, including PSLs, which have not been previously evaluated by the USACE. The Contractor will provide the department with a copy of all consultation(s) or approval(s) from the USACE prior to initiating activities.

The contractor may proceed with activities in PSLs that do not affect a USACE permit area if a self determination has been made that the PSL is non-jurisdictional or proper USACE clearances have been obtained in jurisdictional areas or have been previously evaluated by the USACE as part of the permit review of this project. The contractor is solely responsible for documenting any determination(s) that their activities do not affect a USACE permit area. The contractor will maintain copies of their determination(s) for review by the department and/or any regulatory agency.
The disturbed area for all project locations in the Contract, and the Contractor project specific locations (PSLs) within 1 mile of the project limits for the Contract, will further establish the authorization requirements for storm water discharges. The **City** will obtain an authorization to discharge storm water from the Texas Commission on Environmental Quality (TCEQ) for the construction activities shown on the plans. The Contractor is to obtain required authorization from the TCEQ for Contractor PSLs for construction support activities on or off the ROW. When the total area disturbed in the Contract and PSLs within 1 mile of the project limits exceeds 5 acres, the Contractor shall provide a copy of the Contractor Notice of Intent (NOI) for the PSLs to the Engineer and to the local government operating a municipal separate storm sewer system (MS4) if applicable. If the total area of project disturbed areas and PSLs total between 1-acre but less than 5-acres, the Contractor shall post the appropriate Contractor Construction Site Notice for all Contractor PSLs to be in compliance with TCEQ storm water regulations.

In order to expedite the approval process for PSLs or to eliminate or minimize potential impacts to project progress, initiate coordination efforts with the U.S.A.C.E. within 30 days from the date of “authorization to begin work” for all PSLs that are in areas where the USACE has jurisdiction (i.e. USACE permit areas). If this is not done, the contractor waives the right to request any contract time considerations if project progress is impacted and PSL’S approval is still pending.

Requests submitted to the **AREA ENGINEER** will be evaluated on this basis, and will require documentation showing substantial early coordination efforts to expedite the approval process as herein stated. The request will include a detailed chronological summary status with dates of coordination activities with the resource agencies, including those occurring after the initial coordination, to be reviewed and confirmed by the **CITY’s** environmental section.

For PSLs that fall within USACE permit areas, the Contractor must document and coordinate with the USACE, if required, before any excavation hauled from or embankment hauled into a USACE permit area by either (1) or (2) below.

1. Restricted Use of Materials for Previously Evaluated Permit Areas. The Contractor will document both the project specific location (PSL) and their authorization and the Contractor will maintain copies for review by the Department and/or any regulatory agency. When an area within the project limits has been evaluated by the USACE as part of the permit process for this project, then:
   a. Suitable excavation of required material in the areas shown on the plans and cross sections as specified in Item 110 is used for permanent or temporary fill (Item 132, Embankment) within a USACE permit area may be restricted;
   b. Suitable embankment (Item 132) from within the USACE permit area is used as fill within a USACE evaluated area may be restricted; and,
   c. Unsuitable excavation or excess excavation [“Waste”] (Item 110) that is disposed of at an approved location within a USACE evaluated area may be restricted.

LAS CRUCES REALIGNMENT

GENERAL NOTES

SHEET 2 OF 7

KCI TECHNOLOGIES, INC.
2806 W. BITTERS RD. - SUITE 218
SAN ANTONIO, TX 78248 - 210.641.9999
TEXAS REGISTERED ENGINEERING FIRM
TBPE FIRM No. F-10573
www.kci.com

Texas Department of Transportation

FED.RD. DIV.NO.	FEDERAL AID PROJECT NO.		SHEET NO.
6	DMO 2012 (628)		8
STATE	DIST.	COUNTY	
TEXAS	LRD	WEBB	
CONT.	SECT.	JOB	HIGHWAY NO.
0922	33	076	CS

PLOTTED ON: 7/31/2025 @ 3:52:24 PM DESIGN FILENAME: X:\data\txdot\Projects\359700_LasCruces_FlechaWestLaredoCorridorII\GENERAL\LasCruces_GEN_NOTES_ALL.dgn

2. Contractor Materials from Areas Other than Previously Evaluated Areas. The Contractor will provide the Department with a copy of all USACE coordination or approvals before initiating any activities for an area within the project limits that has not been evaluated by the USACE or for any off right-of-way locations used for the following, but not limited to, haul roads, equipment staging areas, borrow and disposal sites, including:
   a. Item 132, Embankment, used for temporary or permanent fill within a USACE permit area; and,
   b. Unsuitable excavation or excess excavation ["Waste"] (Item 110, Excavation) that is disposed of outside a USACE evaluated area.

Storm Water Regulations Requirements:
The Contractor shall be responsible for (off ROW) PSLs applicable to the TCEQ Construction General Permit (CGP) requirements and will notify the Engineer of the disturbed acreage within one (1) mile of the project limits. The Contractor shall obtain any required authorization form the TCEQ for any Contractor PSLs for construction support activities on or off ROW.

The total disturbed areas within the ROW are anticipated at less than one (1) acre and/or this project is classified as "surface work" consisting of an asphalt overlay of an existing roadway without shoulder-up disturbances. Due to this type of construction, the project qualifies for exclusion under the *Construction General Permit* (CGP) issued by the Texas Commission on Environmental Quality (TCEQ) on February 15, 2008. However; should the sum of the Engineer's anticipated disturbances and all of the Contractor's (On ROW and off ROW) PSLs equal or exceed the one (1) acre threshold, both TxDOT and the Contractor shall have project responsibilities under the CGP that reverts to non-exclusion status. To insure project compliance with all applicable water quality regulations, the Contractor shall obtain Engineer approval for all non-depicted areas of disturbance that increases the Engineer's initial soil and vegetation disturbed area estimates before associated work operations start.

Item 8 - Prosecution and Progress

No closures will be allowed on the weekends which include the following holidays: January 1, the last Monday in May, July 4, the first Monday in September, the fourth Thursday in November, December 25 and Easter weekend.

Working days will be computed and charged in accordance with Article 8.3.1. *(*Five-Day Workweek*)*

Nighttime work will be allowed to be performed, as approved and directed by the Engineer. Refer to the Sequence of Work, Traffic Control Plan, etc. shown in the plans, for other details.

Work that interferes with traffic is required to be performed during off-peak hours, 7 pm until 6 am.

Item 9 - Measurement and Payment

Coordinate and provide off-duty law enforcement officers with officially marked vehicles (if patrol cruisers are available from the enforcement agency involved) during the following operations: Phase Changes (transitioning to a new sequence of construction, traffic signal upgrades, lane closures, and/or during a one-way traffic control situation) For payment in accordance with TxDOT Force Account method; complete the weekly tracking forms and submit invoices that agree with the tracking from for payment at the end of each month approved services were provided.

Submit Material on hand (MOH) payment requests at least 5 working days prior to the end of the month for payment on that month's estimate. For out of town MOH submit requests at least 10 working days prior to the end of the month.

Item 100 - Preparing Right of Way

Burning of brush will not be permitted.

Do not begin any clearing operations until the trees and areas of vegetation that should not be removed or disturbed by construction activities have been identified. To ensure that these areas are not disturbed, place protection fencing as shown in the plans or as directed/approved by the Engineer.

All right of way clearing operations will be coordinated with the project's SW3P and as directed/approved by the Engineer.

Item 105 - Removing Treated and Untreated Base and Asphalt Pavement

Asphalt pavement *and/or* Base material to be removed under this item will remain the property of the Contractor.

Item 106 - Obliterating Abandoned Road

Strip and windrow existing topsoil before shaping operations. Remove asphaltic concrete pavement in conformance with applicable Item. Remove material designated as salvageable in conformance with applicable Items. Remove abandoned structures unless otherwise shown on the plans. Scarify and blend the abandoned roadbed with soil. Break down clods or lumps of material. Fill, cut, and shape the designated sections of the abandoned roadway to blend into the surrounding terrain. Eliminate ditches except where needed to facilitate drainage. Cover disturbed areas with topsoil after shaping operations to facilitate establishment of vegetation.

Item 132 - Embankment

For fill sections from embankment finished grade line and below, to a depth of 4 feet:
Field compact density to ≥ 98% dry density.
Plasticity Index (PI) limit is: 2≤ PI ≤ 15.
Liquid limit ≤ 45
Bar linear shrinkage ≥ 2 Plasticity Index (PI) limit is: 1 ≤ PI ≤ 15.

For all other fill sections, Plasticity Index (PI) limit is less than or equal to 30.

Item 160 - Topsoil

Place 5 inches of Topsoil to designated areas.

Item 164 - Seeding for Erosion Control

Drill seeding will be used for this project. Refer to the Laredo District Standard Revegetation notes and specifications for additional information.

LAS CRUCES REALIGNMENT

GENERAL NOTES

SHEET 3 OF 7

KCI TECHNOLOGIES, INC.
2806 W. BITTERS RD. - SUITE 218
SAN ANTONIO, TX 78248 - 210.641.9999
TEXAS REGISTERED ENGINEERING FIRM
TBPE FIRM No. F-10573
www.kci.com

Texas Department of Transportation

FED.RD. DIV.NO.	FEDERAL AID PROJECT NO.		SHEET NO.
6	DMO 2012 (628)		9
STATE	DIST.	COUNTY	
TEXAS	LRD	WEBB	
CONT.	SECT.	JOB	HIGHWAY NO.
0922	33	076	CS

PLOTTED ON: 7/31/2025 @ 3:52:27 PM DESIGN FILENAME: X:\data\txdot\Projects\359700_LasCruces_FlechaWestLaredoCorridor\IGENERAL\LasCruces_GEN_NOTES_ALL.dgn

Item 168 - Vegetative Watering

For Requiring Watering at a Specified Rate (Used only in Urban Projects).

Water all areas of project to be seeded or sodded at a rate of 1.4 gal per sq yd per cycle with 2 cycles per day for first 28 days then 2.8 gals per sq yd with 1 cycle per day for day 29 thru day 42.

Maintain the seed bed in a condition favorable for the growth of grass. Watering can be postponed immediately after a rainfall on the site of ½ in. or greater, but will be resumed before the soil dries out. Watering will continue until final acceptance.

Obtain water at a source that is metered or furnish the manufacturer's specifications showing the tank capacity for each truck used. Notify the Engineer before watering so meter readings or truck counts may be verified.

Establish 70% uniform vegetative coverage during this period in order to comply with stabilization requirements. Operate and meter water equipment under pumping pressure in order to deliver the required quantities of water necessary. During periods of adequate moisture, as determined by the Engineer, mechanical watering may not be required. In addition to metering the water equipment, provide a log book showing daily water usage and receipts of water applied upon request of the Engineer.
Upon establishment of 70% vegetative coverage as determined by the Engineer, the Engineer has the option to require the Contractor to continue watering as specified for a period not to exceed 30 days.

Item 320 – Equipment for Hot Mix Asphalt Materials

For staged construction, all longitudinal ACP joints shall be constructed with a 3:1 to 6:1 taper. For placement of 2 inches or more, the device will provide a maximum ½ inch vertical edge. Outside edges (next to the grass/earth) will also have a taper or will be backfilled the same day.

Final Surface course: all longitudinal ACP joints for the final Hot Mix surface course shall be in widths equal to travel lane widths so that all final course ACP joints will match the proposed lane striping (pavement markings), unless otherwise directed by the engineer.

Item 341 - Dense-Graded Hot-Mix Asphalt (Exempt)

The tack coat material shall be placed at a rate of approximately 0.07 gal/sy.

Underseals will be tacked at a rate of 0.04 gal/sy when left open to traffic for more than 14 days.

Waterproof thermal tarps are required on all loads unless otherwise approved by the Engineer

Contractor is allowed to use RAP below the riding surface.

HMACP TY	Application Rate	Lab Density
A*	120 #/SY/IN	96.5%
B*	120 #/SY/IN	96.5%
C	115 #/SY/IN	96.5%
D	115 #/SY/IN	96.5%

* If mix has RAP the required lab density will be 97%.

In addition to the tack coat materials specified in these standard specifications, MS-2 or MS-1 may be used.

Use the point of sampling for tests, test method TEX-217-F (part I and part II), for the coarse aggregate stockpile when the dryer-drum mixing plant is used. The point of sampling when the batch plant is used will be at the hot bins.

The use of RAP will not be allowed on the final riding surface.

Furnish uncontaminated materials of uniform quality that meets the requirement of the plans and specifications.

Notify the Engineer of all materials sources and before changing any material source or formulation. The Engineer will verify that the specification requirements are met and document all material source changes when the Contractor makes a source of formulation change. Then Engineer may sample and rest project materials anytime during the project to verify specification compliance in accordance with Item 6L, "Control of Materials."

Tack every intermediate layer, unless otherwise directed. Apply it through a distributor spray bar in accordance with Article 316.3 "Equipment".

Item 400 – Excavation and Backfill for Structures

Excavate to the lines and grades shown on the plans or as directed. Provide slopes, benching, sheeting, bracing, pumping, and bailing as necessary to maintain the stability and safety of excavations up to 5 ft. deep. Excavation protection for excavations deeper than 5 ft. is governed by Item 402, "Trench Excavation Protection," and Item 403, "Temporary Special Shoring." Use satisfactory excavated material as backfill or as embankment fill in accordance with Item 1 32, "Embankment." Dispose of material not incorporated into the final project off the right of way in conformance with federal, state, and local regulations.
Keep any topsoil that has been removed separate, and replace it, as nearly as feasible, in its original position when excavating for installation of structures across private property or beyond the limits of the embankment. Restore the area to an acceptable condition.
Excavate drilled shafts in accordance with Item 416, "Drilled Shaft Foundations."

Item 416 - Drilled Shaft Foundations

Place the grounding rods for the traffic signal poles at the nearest ground box. The ground rod will be 5/8" x 10 feet. A continuous bare or green insulated copper wire (no. 6) will be installed from the ground rod to the base of the traffic signal.

Item 420 - Concrete Substructures

Sulfate resistant concrete shall be used in all situations for concrete structures in contact with the natural ground.

Item 421 - Hydraulic Cement Concrete

Sulfate resistant cement concrete shall be used in all situations for structural elements in contact with the natural ground. These includes, but is not limited to, all reinforced concrete pipe, concrete box culverts, drill shafts, bridge columns, bridge abutments, wingwalls, approach slabs, inlets, manholes, junction boxes, ground boxes and all concrete riprap.

Air entrainment is not required. If concrete is supplied with air entrainment, the concrete must adhere to the requirements of item 421.4.2.4.

LAS CRUCES REALIGNMENT

GENERAL NOTES

SHEET 4 OF 7

KCI TECHNOLOGIES, INC.
2806 W. BITTERS RD. - SUITE 218
SAN ANTONIO, TX 78248 - 210.641.9999
TEXAS REGISTERED ENGINEERING FIRM
TBPE FIRM No. F-10573
www.kci.com

Texas Department of Transportation

FED.RD. DIV.NO.	FEDERAL AID PROJECT NO.		SHEET NO.
6	DMO 2012 (628)		10
STATE	DIST.	COUNTY	
TEXAS	LRD	WEBB	
CONT.	SECT.	JOB	HIGHWAY NO.
0922	33	076	CS

PLOTTED ON: 7/31/2025 @ 3:52:30 PM DESIGN FILENAME: X:\data\txdot\Projects\359700_LasCruces_Flecha\WestLaredoCorridor\IGENERAL\LasCruces_GEN_NOTES_ALL.dgn

Item 432 - Riprap

Provide Class B Concrete for riprap.

Item 462 – Concrete Box Culverts and Drains

Provide cast-in-place or precast, formed or machine-made, box culverts and drains. Use Class S concrete for top slabs of cast-in-place concrete culverts for culverts with overlay, and a one- to two-course surface treatment or a top slab that is the final riding surface, unless otherwise shown on the plans. Use Class C concrete for the rest of the culvert and for all other cast-in-place boxes. Culverts with fill do not require Class S concrete.
Furnish material for precast formed and machine-made box culverts in accordance with DMS- 7305, "Fabrication and Qualification Procedure for Multi-Project Fabrication Plants of Precast Concrete Drainage Structures."

Item 500 - Mobilization

"Materials-on-Hand" payments will not be considered in determining percentages used to compute mobilization payments.

Item 502 - Barricades, Signs, and Traffic Handling

Designate, as the Contractor Responsible Person (CRP), an English speaking employee on-call nights and weekends (or any other time that work is not in progress) with a local address and telephone number for maintenance of signs and barricades. This employee will be located within one (1) hour of traveling time to the project site. Notify the Engineer in writing of the name, address and telephone number of this employee. Furnish this information to local law enforcement officials.

The time frame for the Contractor to provide properly maintained traffic control devices before they are considered to be in non-compliance with this Item, is 48 hours regardless of the days of the week involved after notification is done in writing by the Engineer.

When advanced warning flashing arrow panel(s) is/are specified, maintain one standby unit in good condition at the job site ready for immediate use is required.

Place eight inches of both red and white stripes in an inverted "V" design on the back of all TMA's. Conform all sheeting to Departmental Material Specification D-9-8300, Type C.

Whenever it is necessary for the signals to be turned off, when directed/approved by the Engineer, hire off-duty law enforcement officers as covered by Item 9L to control the traffic until the signals are back in satisfactory condition.

Traffic control required for this project will not be paid for directly, but will be considered subsidiary to the various bid items.

Provide two-way radios in areas where flagmen do not have visual contact with one another or cannot communicate with one another.

Provide shadow vehicles equipped with Truck Mounted Attenuators (TMA) as shown on Traffic Control Plan (TCP) standards (2 series).

Ensure equipment not in use, stockpile aggregate, and other working materials are:
A minimum of 30 feet from the edge of the travel lane;
Do not obstruct traffic or sight distance;
Do not interfere with the access from abutting property; or
Do not interfere with roadway drainage.

Erect signs in locations not obstructing the traveling public's view of the normal roadway signing or necessary sight distance at intersections and curves.

During the holiday time frame of December 21st through January 1st, every effort should be taken to ensure that all travel lanes remain open where possible.

The Contractor Force Account "Safety Contingency" that has been established for this project is intended to be utilized for work zone enhancements, to improve the effectiveness of the Traffic Control Plan, that could not be foreseen in the project planning and design stage. These enhancements will be mutually agreed upon by the Engineer and the Contractor's Responsible Person based on weekly or more frequent traffic management reviews on the project. The Engineer may choose to use existing bid items if it does not slow the implementation of enhancement.

Item 503 - Portable Changeable Message Sign

Provide two (2) electronic portable changeable message signs as required by the Engineer. Provide backups and keep operational and available on the jobsite at all times during traffic control operations. The electronic portable changeable message signs will be made available for utilization for the entire duration of the project, including all alternative locations.

Item 504 - Field Office and Laboratory

Provide a Type D Structure. Ensure the field lab has an office for City use along with a lockable file cabinet, desk, and chair. Contractor must have at least two designated parking spaces for City field lab personnel vehicles.

Item 506 - Temporary Erosion, Sedimentation, and Environmental Controls

The City will take over responsibility for the establishment of 70% vegetative cover, based on adjacent undisturbed vegetation, upon the completion of all other work in accordance with the contract and final acceptance.

Item 512 - Portable Traffic Barrier

Do not use different types of Portable Traffic Barriers in a single continuous installation.

LAS CRUCES REALIGNMENT

GENERAL NOTES

SHEET 5 OF 7

KCI TECHNOLOGIES, INC.
2806 W. BITTERS RD. - SUITE 218
SAN ANTONIO, TX 78248 - 210.641.9999
TEXAS REGISTERED ENGINEERING FIRM
TBPE FIRM No. F-10573
www.kci.com

Texas Department of Transportation

FED.RD. DIV.NO.	FEDERAL AID PROJECT NO.		SHEET NO.
6	DMO 2012 (628)		11
STATE	DIST.	COUNTY	
TEXAS	LRD	WEBB	
CONT.	SECT.	JOB	HIGHWAY NO.
0922	33	076	CS

PLOTTED ON: 7/31/2025 @ 3:52:32 PM DESIGN FILENAME: X:\data\txdot\Projects\359700_LasCruces_Flecha\WestLaredoCorridorII\GENERAL\LasCruces_GEN_NOTES_ALL.dgn

Item 520 – Weighing and Measuring Equipment

The hot-mix and concrete producer is required to use an automated ticket that contains the same information as the City of Laredo's ticket. The producers' ticket shall be a computer printout submitted to the City for approval prior to use.

Item 585 - Ride Quality for Pavement Surfaces

Ride quality will be waved.

Item 618 - Conduit

If using the trenching method outside of existing pavement, place conduit on a 2-inch sand cushion and then backfill with a minimum of 6 inches of sand fill. Backfill the remainder of the trench with flexible base, soil, or two-sack concrete as directed.

Place conduit in an area not exceeding 2 feet in any direction from a straight line and the depth of the conduit will be 2 feet, except when crossing a roadway, where the depth will not be more than 3 feet or less than 1 foot below the bottom of the base material in the roadway when placed by the jacking or boring method. Any evidence of damage to the roadway during the jacking or boring operation will be sufficient grounds to stop the method being used. Repair any roadway damage, due to daily operations in jacking or boring, at no additional cost to the State.

Item 620 - Electrical Conductors

Provide a sized, self-insulated, solderless terminal to ends of wires to be attached to terminal posts. Attach these terminals to wires with a ratchet type compression crimping tool properly sized to the wire. Place pre-numbered identification tags of plastic or tape around each wire adjacent to wire ends in the controller, signal heads, and signal pole terminal blocks.

Item 624 - Ground Boxes

Do not place ground boxes in driveways or wheelchair ramps. Alternate ground box locations will be as directed. Ground box aprons will have a 2% slope.

Item 628 - Electrical Services

All traffic signal electrical service pole(s) for this project will be as shown on the plans.

Consider any and all costs associated with the installation and connection of electrical services to the electrical utility company subsidiary to bid item 628 "Electrical Services." This includes conduit, conduit fittings, and electrical conductors.

Ground all electrical service poles in accordance with the latest edition of the National Electrical Code (NEC) and TXDOT Standards. Include the cost of such grounding in the unit price for this bid item.

Provide breakaway electrical connectors for breakaway poles. Use BUSSMAN HEBW, LITTLEFUSE LEB, FERRAZ-SHAWMUT FEB, or equal on ungrounded conductors. For grounded conductors, use BUSSMAN HET, LITTLEFUSE LET, FERRAZ-SHAWMUT FEBN, or equal. These breakaway connectors have a white colored marking and a permanently installed solid neutral. See the latest RID (2) standard for additional details.

Item 666 – Reflectorized Pavement Markings

Reflectivity requirements for Type I will be as per Item 666.

Item 680 - Highway Traffic Signals

All workers installing electrical materials, including conduit in trenches, services poles and all others system electrical apparatus, will be directly supervised by persons who have completed a TxDOT approved course in electrical underground installations. Furnish evidence of satisfactory completion of the underground electrical installation for roadway illumination and signal control course for all personnel responsible for direct supervision of electrical installation work.

Unless otherwise shown on the plans, provide complete installations of highway traffic signals that consist of the following principal items for traffic signals and flashing beacons:

1. Furnish and install a complete controller cabinet compatible with the existing closed loop system when applicable, steel poles with mast arms, luminaires, photocells, signal cables, signal heads, LEDs, pedestrian signal heads, and pedestrian push buttons and signs that meet the "American with Disabilities Act" (ADA) standards and "Texas Accessibility Standards" (TAS), video imaging vehicle detection systems (VIVDS), ground boxes, conduit runs, striping, curb & gutter, and ADA and TAS compliant wheelchair ramps.

2. Furnish and install steel strain poles, luminaries, photocells, pole mounted flasher controller assembly, signal heads, LEDs, signal cables, conduits, span wires, and pavement markings.
3. Furnish and install all other items not listed above which are needed to provide for a complete traffic signal installation as shown in the plans; the items needed, can include, but are not limited to, the following: signs, ground rods, roadway lights, damping devices, and/or photoelectric cells.

Meters will be mounted at the specified height required by the respective utility company. Consider the cost of this work under bid item 628 "Electrical Services."

The signal installation will be wired to operate in accordance with the wiring diagram shown in the plans. The contractor will ensure that the timing and phasing are the same as shown in the plans. All timing and phasing will be approved and/or provided by the Transportation Operations Engineer prior to downloading to the controller.

On the terminal block, use the left side for the home runs and the right side for the signal heads. This pattern will be used in all signal installations.
For grounding and bonding install a green insulated copper wire no. 6.

LAS CRUCES REALIGNMENT

GENERAL NOTES

SHEET 6 OF 7

KCI TECHNOLOGIES, INC.
2806 W. BITTERS RD. - SUITE 218
SAN ANTONIO, TX 78248 - 210.641.9999
TEXAS REGISTERED ENGINEERING FIRM
TBPE FIRM No. F-10573
www.kci.com

Texas Department of Transportation

FED.RD. DIV.NO.	FEDERAL AID PROJECT NO.		SHEET NO.
6	DMO 2012 (628)		12
STATE	DIST.	COUNTY	
TEXAS	LRD	WEBB	
CONT.	SECT.	JOB	HIGHWAY NO.
0922	33	076	CS

PLOTTED ON: 7/31/2025 @ 3:52:35 PM DESIGN FILENAME: X:\data\txdot\Projects\359700_LasCruces_FlechalWestLaredoCorridor\\GENERAL\LasCruces_GEN_NOTES_ALL.dgn

Item 681 – Temporary Traffic Signals

Provide temporary traffic signals either generator or solar powered. Provide backup and keep operational and available on the job site at all times during traffic control. Provide temporary traffic signals with a minimum of two indications per approach. Signal heads will be equipped with LED's and back plates. Temporary traffic signals shall be full actuated and interconnected.

Item 682 - Vehicle and Pedestrian Signal Heads

All new signal heads will be covered with burlap from the time of installation until the signal is placed in operation. Provide signal heads made of polycarbonate material and yellow in color. All signal heads will have detachable visors. Position all vehicle signal section heads and pedestrian signal heads to provide the best view for motorists and pedestrians.

Item 684 - Traffic Signal Cables

For each traffic signal installation where signal cable is required, provide a minimum length of 5 feet for each conductor terminating in the controller.

Label all traffic signal cables, vehicle detector cables, and pedestrian signal cables terminating in the controller with marker ties and permanent markers.

Item 686 - Traffic Signal Pole Assemblies (Steel)

Traffic signal poles will be placed at a 10 feet desirable minimum distance from the roadway curb or edge of pavement or as approved.

Item 3005 – Spray Applied Underseal Membrane

Furnish asphalt materials in accordance with Article 300.2., "Materials" for the following options:

Item 3007 – Bonding Course

Furnish asphalt materials in accordance with Article 300.2., "Materials" for the following option:

Underseal Membrane. Furnish asphalt material meeting the requirements of Special Specification 3005, "Spray Applied Underseal Membrane." Do not dilute emulsified asphalts at the terminal, in the field, or at any other location before use.

Furnish asphalt material for applying tack coat to all miscellaneous contact surfaces when approved by the Engineer:

Item 6005 – Networking Intelligent Transportation System (ITS) Communications Cable

Provide new cable and connectors that are in conformance with the details shown on the plans and in the Specifications. The cable must be free of deformations, holes, splits, and splices.

ITS networking copper cables must be constructed for installation in an outdoor underground conduit environment. All cable provided for underground installation must contain the outside plant designation for outdoor usage and must be rated non-plenum.

Item 6008 – Radar Vehicle Detection System for Signalized Intersection Control

Except as allowed for relocation of RVDS equipment, ensure all equipment and component parts are new in accordance with Division Specification TO-8000, "Radar Vehicle Detection System," Section 1.0–Section 6.0, and in an operable condition at time of delivery and installation.

The Traffic Safety Division, Traffic Management Section, (TRF-TM) updates TxDOT Material producer list (MPL) of all RVDSs conforming to this Specification. New materials appearing on the MPL require no further sampling and testing before use unless deemed necessary by the Engineer or TRF-TM. Provide prequalified RVDSs from the TxDOT MPL.

Ensure all RVDSs serving the same detection purpose within the project are from the same manufacturer. RVDS devices are classified by their functional requirements. The functional requirements are for radar presence detection devices (RPDDs) and radar advance detection devices (RADDs). The RVDS system classifications are RVDS (RPDD Only), RVDS (RADD Only), and RVDS (RPDD and RADD).

Provide each RVDS sensor with a mounting bracket designed to mount directly to a pole, mast arm, or other structure. Ensure bracket is designed such that the sensor can be tilted vertically and horizontally for alignment and then locked into place after proper alignment is achieved. All hardware must be designed to support the load of the RVDS sensor and mounting bracket.

Item 6009 – ITS System Integration

This Item will govern the integration of all furnished equipment and software as shown on the plans, as detailed in this Special Specification, and as directed. Furnish, install, test, and integrate all traffic management hardware and software into the Advanced Traffic Management System (ATMS) and the Department or local Traffic Management Center (TMC), as specified in the plans. The Contractor must select, install, and integrate the equipment and software as required to achieve a complete and fully operational Traffic Management System (TMS) as shown on the plans, as detailed in this Special Specification, and as directed.

Item 6014 – Intelligent Transportation System (ITS) Radio

Furnish, install, remove, or relocate an Intelligent Transportation System (ITS) radio at locations shown on the plans, or as directed.

Provide new materials that are in accordance with the details shown on the plans and the requirements of this Item. Supply all equipment and hardware needed for a complete functioning system. Materials for equipment to be relocated will be "as-is." The Contractor will protect the existing equipment from further wear or damage.

Item 6018 – Digital Closed-Circuit Television (CCTV) Field Equipment

Furnish, install, relocate, or remove closed-circuit television (CCTV) field equipment at locations shown on the plans, or as directed.

LAS CRUCES REALIGNMENT

GENERAL NOTES

SHEET 7 OF 7

KCI TECHNOLOGIES, INC.
2806 W. BITTERS RD. - SUITE 218
SAN ANTONIO, TX 78248 - 210.641.9999
TEXAS REGISTERED ENGINEERING FIRM
TBPE FIRM No. F-10573
www.kci.com

Texas Department of Transportation

FED.RD. DIV.NO.	FEDERAL AID PROJECT NO.		SHEET NO.
6	DMO 2012 (628)		13
STATE	DIST.	COUNTY	
TEXAS	LRD	WEBB	
CONT.	SECT.	JOB	HIGHWAY NO.
0922	33	076	CS

PLOTTED ON: 7/31/2025 @ 3:52:38 PM DESIGN FILENAME: X:\data\txdot\Projects\359700_LasCruces_FlechaWestLaredoCorridor\\GENERAL\LasCruces_GEN_NOTES_ALL.dgn

	164 7021	164 7022	512 7009	512 7010	512 7033	512 7034	512 7057	512 7058	506 7003	506 7011	506 7020	506 7024	506 7039	506 7041	503 7001	681 7001	502 7001
TCP	HYDRO MULCH SEED (TEMP_WARM)	HYDRO MULCH SEED (TEMP_COOL)	PORT CTB (FUR & INST) (LOW PROF) (TY 1)	PORT CTB (FUR & INST) (LOW PROF) (TY 2)	PORT CTB (MOVE) (LOW PROF) (TY 1)	PORT CTB (MOVE) (LOW PROF) (TY 2)	PORT CTB (REMOVE) (LOW PROF)(TY 1)	PORT CTB (REMOVE) (LOW PROF)(TY 2)	ROCK FILTER DAMS INSTALL (TY 3)	ROCK FILTER DAMS (REMOVE)	CONSTRUCTIO N EXITS (INSTALL) (TY 1)	CONSTRUCTI ON EXITS (REMOVE)	TEMP SEDMT CONT FENCE (INSTALL)	TEMP SEDMT CONT FENCE (REMOVE)	PORTABLE CHANGEABL E MESSAGE SIGN	TEMP TRAF SIGNALS	BARRICADES, SIGNS AND TRAFFIC HANDLING
	SY	SY	LF	LF	LF	LF	LF	LF	LF	LF	SY	SY	LF	LF	DAY	EA	MO
PHASE 1	405	405	200	40	200	40			57		78	78	751			1	
PHASE 2	111	111			200	40									48		
PHASE 3	95	95					200	40		57	78	78		751			
PROJECT TOTALS	611	611	200	40	400	80	200	40	57	57	156	156	751	751	48	1	10

LAS CRUCES REALIGNMENT

TCP AND SW3P SUMMARY

SHEET 1 OF 1

KCI TECHNOLOGIES, INC.
2806 W. BITTERS RD. - SUITE 218
SAN ANTONIO, TX 78248 - 210.641.9999
TEXAS REGISTERED ENGINEERING FIRM
TBPE FIRM No. F-10573
www.kci.com

Texas Department of Transportation

FED.RD. DIV.NO.	FEDERAL AID PROJECT NO.		SHEET NO.
6	DMO 2012 (628)		14
STATE	DIST.	COUNTY	
TEXAS	LRD	WEBB	
CONT.	SECT.	JOB	HIGHWAY NO.
0922	33	076	CS

PLOTTED ON: 2/27/2025 @ 11:31:46 AM DESIGN FILENAME: X:\data\txdot\Projects\359700_LasCruces_Flecha\WestLaredoCorridorII\Summaries\LasCruces_TCP_SW3P.dgn

PLAN SHEET NO.	STATION TO STATION	0104 7008	0104 7011	0104 7016	0106 7002	0496 7006	0496 7007
		REMOV CONC (MEDIANS)	REMOV CONC (DRIVEWAYS)	REMOV CONC (CURB)	OBLITERATING ABANDONED ROAD	REMOV STR (HEADWALL)	REMOV STR (PIPE)
		SY	SY	LF	SY	EA	LF
REMOVAL 1 OF 1	BEGIN TO END	460	904	597	2425	2	108
ROADWAY TOTALS		460	904	597	2425	2	108

LAS CRUCES REALIGNMENT

REMOVAL SUMMARY

SHEET 1 OF 1

KCI TECHNOLOGIES, INC.
2806 W. BITTERS RD. - SUITE 218
SAN ANTONIO, TX 78248 - 210.641.9999
TEXAS REGISTERED ENGINEERING FIRM
TBPE FIRM No. F-10573
www.kci.com

Texas Department of Transportation

FED.RD. DIV.NO.	FEDERAL AID PROJECT NO.		SHEET NO.
6	DMO 2012 (628)		15
STATE	DIST.	COUNTY	
TEXAS	LRD	WEBB	
CONT.	SECT.	JOB	HIGHWAY NO.
0922	33	076	CS

PLOTTED ON: 2/24/2025 @ 5:30:46 PM DESIGN FILENAME: X:\data\txdot\Projects\359700_LasCruces_Flecha\WestLaredoCorridorII\Summaries\LasCruces_REM_UTIL.dgn

	0100 7002	0110 7001	0110 7002	0132 7002	0164 7009	0168 7001	0341 7037	0341 7001	0403 7001	0432 7013	0528 7003	0529 7009	0529 7002	0529 9999	0530 7006
LOCATION	PREPARING ROW	EXCAV (ROADWAY)	EXCAV (CHANNEL)	EMBANK (FNL)(DC) (TY A)	DRILL SEED (PERM RURAL SAND)	VEGETATIVE WATERING	D-GR HMA TY-C SAC-B PG70-22 (EXEMPT)	D-GR HMA TY-B PG64-22	TEMPORARY SPL SHORING	RIPRAP (MOW STRIP)(4 IN)	REMOVE AND RELAY PAVERS	CONC CURB & GUTTER (TY II)	CONC CURB (TY II)	CONC CURB (TY B) MOUNTABLE	DRIVEWAYS (CONC)
	STA	CY	CY	CY	SY	TGL	TONS	TONS	SF	CY	SY	LF	LF	LF	SY
BEGIN TO STA 16+50.00	5	312		2,088	781	90	314	2,178	615	7		1,056			99
STA 16+50.00 TO END	4	171		1,859	347	40	237	1,654	845	8		726		276	199
CUL-DE-SAC					199	23	112	772				356			124
FM 1472. LEFT TURN LANE							69	533			153		420		
CHANNEL GRADING			2,661	36	815	94									
INT 01															
TOTALS	**9**	**483**	**2,661**	**3,983**	**2,142**	**247**	**732**	**5,137**	**1,460**	**15**	**153**	**2,138**	**420**	**276**	**422**

	0531 7001	0531 7010	0540 7003	0540 7005	0540 7015	0540 7016	0544 7001	0545 7010	3007 7001
LOCATION	CONC SIDEWALKS (4")	CURB RAMPS (TY 7)	MTL THRIE-BEAM GD FEN (TIM POST)	MTL BEAM GD FEN TRANS (THRIE-BEAM)	DOWNSTREAM ANCHOR TERMINAL SECTION	MTL BM GD FEN TRANS (NON-SYM)	GAURDRAIL END TREATMENT (INSTALL)	CRASH CUSH ATTEN (INSTL) (R) (N) (TL3)	BONDING COURSE
	SY	EA	LF	EA	EA	EA	EA	EA	GAL
BEGIN TO STA 16+50.00	715		87.5	1	1	1		1	215
STA 16+50.00 TO END	308		25	2			2		162
CUL-DE-SAC									76
FM 1472. LEFT TURN LANE									47
CHANNEL GRADING									
INT 01		3							
TOTALS	**1,023**	**3**	**113**	**3**	**1**	**1**	**2**	**1**	**500**

LAS CRUCES REALIGNMENT

ROADWAY & GRADING SUMMARY

SHEET 1 OF 1

KCI TECHNOLOGIES, INC.
2806 W. BITTERS RD. - SUITE 218
SAN ANTONIO, TX 78248 - 210.641.9999
TEXAS REGISTERED ENGINEERING FIRM
TBPE FIRM No. F-10573
www.kci.com

Texas Department of Transportation

FED.RD. DIV.NO.	FEDERAL AID PROJECT NO.		SHEET NO.
6	DMO 2012 (628)		16
STATE	DIST.	COUNTY	
TEXAS	LRD	WEBB	
CONT.	SECT.	JOB	HIGHWAY NO.
0922	33	076	CS

PLOTTED ON: 7/31/2025 @ 5:46:31 PM DESIGN FILENAME: X:\data\txdot\Projects\359700_LasCruces_Flecha\WestLaredoCorridorII\Summaries\LasCruces_GRD.dgn

LAS CRUCES DR				
STA 11+54.73 TO STA 20+71.00				
BASELINE STATION NUMBER	STATION CUT (CU YD)	STATION FILL (CU YD)	ACCUM CUT (CU YD)	ACCUM FILL (CU YD)
11+54.75	0.00	0.00	**0**	**0**
12+00.00	226.25	4.19	**226**	**4**
12+50.00	67.59	30.56	**294**	**35**
13+00.00	11.11	116.67	**305**	**151**
13+50.00	0.00	255.56	**305**	**407**
13+87.00	1.37	288.46	**306**	**695**
14+00.00	0.72	112.19	**307**	**808**
14+50.00	1.85	400.00	**309**	**1208**
14+68.00	0.67	142.33	**310**	**1350**
15+00.00	0.59	293.33	**310**	**1643**
15+50.00	1.39	444.44	**312**	**2088**
16+00.00	1.39	299.07	**313**	**2387**
16+50.00	2.31	228.70	**315**	**2616**
17+00.00	2.31	224.07	**318**	**2840**
17+50.00	0.00	204.63	**318**	**3044**
18+00.00	1.39	274.07	**319**	**3318**
18+50.00	11.57	312.04	**331**	**3630**
18+79.00	9.67	131.57	**340**	**3762**
19+00.00	4.28	68.06	**344**	**3830**
19+50.00	8.33	89.81	**353**	**3920**
20+00.00	31.48	21.30	**384**	**3941**
20+33.00	41.86	3.06	**426**	**3944**
20+50.00	25.19	1.26	**451**	**3945**
20+70.98	31.47	1.36	**483**	**3947**

PROPOSED CHANNEL				
STA 11+00.00 TO STA 15+28.16				
BASELINE STATION NUMBER	STATION CUT (CU YD)	STATION FILL (CU YD)	ACCUM CUT (CU YD)	ACCUM FILL (CU YD)
11+00.00	0	0	**0**	**0**
11+30.00	52	0	**52**	**0**
12+12.25	798	0	**850**	**0**
13+33.91	0	0	**850**	**0**
14+35.00	1412	28	**2261**	**28**
14+76.15	257	8	**2519**	**36**
15+28.16	142	0	**2661**	**36**

LAS CRUCES REALIGNMENT

EARTHWORK SUMMARY

SHEET 1 OF 1

KCI TECHNOLOGIES, INC.
2806 W. BITTERS RD. - SUITE 218
SAN ANTONIO, TX 78248 - 210.641.9999
TEXAS REGISTERED ENGINEERING FIRM
TBPE FIRM No. F-10573
www.kci.com

Texas Department of Transportation

FED.RD. DIV.NO.	FEDERAL AID PROJECT NO.		SHEET NO.
6	DMO 2012 (628)		17
STATE	DIST.	COUNTY	
TEXAS	LRD	WEBB	
CONT.	SECT.	JOB	HIGHWAY NO.
0922	33	076	CS

PLOTTED ON: 2/24/2025 @ 5:30:46 PM DESIGN FILENAME: X:\data\txdot\Projects\359700_LasCruces_Flecha\WestLaredoCorridorII\Summaries\LasCruces_EW.dgn

DRAINAGE SUMMARY

	400-7001	402-7001	432-7002	432-7033	464-7005	464-7011	465-7011	465-7013	465-7016	465-7021	465-9999
STATION TO STATION	STRUC EXCAV	TRENCH EXCAVATION PROTECTION	RIPRAP (CONC) (5 IN)	RIPRAP (STONE COMMON)(DRY) (18 IN)	RC PIPE (CL III) (24" DIA)	RC PIPE (CL III)(48 IN)	JCTBOX(COMPL) (PJB)(6FTX6FT)	INLET (COMPL)(PCO) (3FT)(NONE)	INLET (COMPL)(PCO) (3FT)(BOTH)	INLET (COMPL)(PCO) (5FT)(NONE)	INLET(COMPL) (TRAFFIC) (TY X-5)
	CY	LF	CY	CY	LF	LF	EA	EA	EA	EA	EA
BEGIN TO STA 17+00.00	192	309			240			1	1		
STA 17+00.00 TO END	692	390			60	326	2		1	1	1
STA 16+13.32 CULVERT	3241		268	35							
TOTALS	4125	699	268	35	300	326	2	1	2	1	1

BRIDGE SUMMARY

	462-7035	466-7180	466-7181	450-7030	420-7052
STATION TO STATION	CONC BOX CULV (10 FT X 7 FT)	WINGWALL (PW-1) (Hw=10FT)	WINGWALL (PW-1) (Hw=11FT)	RAIL (TY C1W)	CL C CONC (RAIL FOUNDATION)
	LF	EA	EA	LF	CY
BEGIN TO STA 16+50.00				313	37
STA 16+50.00 TO END				156	48
STA 16+13.32 CULVERT	910	1	1		
TOTALS	910	1	1	469	85

LAS CRUCES REALIGNMENT

DRAINAGE & BRIDGE SUMMARY

SHEET 1 OF 1

KCI TECHNOLOGIES, INC.
2806 W. BITTERS RD. - SUITE 218
SAN ANTONIO, TX 78248 - 210.641.9999
TEXAS REGISTERED ENGINEERING FIRM
TBPE FIRM No. F-10573
www.kci.com

Texas Department of Transportation

FED.RD. DIV.NO.	FEDERAL AID PROJECT NO.		SHEET NO.
6	DMO 2012 (628)		18
STATE	DIST.	COUNTY	
TEXAS	LRD	WEBB	
CONT.	SECT.	JOB	HIGHWAY NO.
0922	33	076	CS

PLOTTED ON: 2/24/2025 @ 5:30:47 PM DESIGN FILENAME: X:\data\txdot\Projects\359700_LasCruces_FlechaWestLaredoCorridor\I\Summaries\LasCruces_DRN.dgn

	416	618	618	618	618	620	620	621	624	680	682	682	682	682	682	682	682
	7046	7030	7055	7040	7065	7009	7010	7006	7008	7004	7001	7002	7003	7004	7005	7006	7018
MINES RD & LAS CRUCES DR	DRILL SHAFT (TRF SIG POLE) (48 IN)	CONDT (PVC) (SCH 40) (2")	CONDT (PVC) (SCH 80) (2") (BORE)	CONDT (PVC) (SCH 40) (4")	CONDT (PVC) (SCH 80) (4") (BORE)	ELECTRICAL CONDUCTOR (NO. 6) BARE	ELECTRICAL CONDUCTOR (NO. 6) INSULATED	TRAY CABLE (4 CONDR) (12 AWR)	GROUND BOX TY D (162922)W/A PRON	REMOVING TRAFFIC SIGNALS	VEH SIG SEC (12")LED(GRN)	VEH SIG SEC (12")LED(GRN ARW)	VEH SIG SEC (12")LED(YEL)	VEH SIG SEC (12")LED(YEL ARW)	VEH SIG SEC (12")LED(RED)	VEH SIG SEC (12")LED(RED ARW)	PED SIG SEC (LED)(COUNTD OWN)
UNIT	LF	LF	LF	LF	LF	LF	LF	LF	EA	EA	EA	EA	EA	EA	EA	EA	EA
TOTAL	66	140	450	70	620	1450	120	1040	2	1	12	4	12	8	12	4	6

	682	682	684	684	684	684	684	686	686	687	688	688	6009	6005	6008	6008	6014	6018
	7042	7043	7009	7010	7012	7014	7028	7063	7067	7001	7001	7003	9999	*	*	*	*	*
MINES RD & LAS CRUCES DR	BACKPLATE W/REF BRDR(3 SEC)(VENT)ALUM	BACKPLATE W/REF BRDR(4 SEC)(VENT)ALUM	TRF SIG CBL (TY A)(12 AWG)(4 CONDR)	TRF SIG CBL (TY A) (12AWG) (5 CONDR)	TRF SIG CBL(TY A)(12 AWG)(7 CONDR)	TRF SIG CBL (TY A)(12 AWG) (9 CONDR)	TRF SIG CBL (TYA)(14 AWG)(2 CONDR)	INS TRF SIG PL AM (S) 1 ARM (60') LUM	INS TRF SIG PL AM(S)1 ARM(65')LUM	PED POLE ASSEMBLY	PED DETECT PUSH BUTTON (APS)	PED DETECTOR CONTROLLER UNIT	ITS SYSTEM INTERGRATION	ITS COM CBL (ETHERNET)	RVDS (PRESENCE DETECTION ONLY)	RVDS (PRESENCE AND ADVANCE DETECTION)	ITS RADIO (SNGL)(5GHZ) I (O)	CCTV FIELD EQUIPMENT (DIGITAL)
UNIT	EA	EA	LF	LF	LF	LF	LF	EA	EA	EA	EA	EA	LS	LF	EA	EA	EA	EA
TOTAL	12	4	1465	600	1095	805	1310	2	1	3	7	1	1	101	2	2	1	1

* NOTE: REVIEW SUMMARY OF TRAFFIC SIGNAL QUANTITIES SHEET FOR SUBSIDIARY ITEMS

	680	680	680	680	680	680	680	680
	7002	*	*	*	*	*	*	*
MINES RD & LAS CRUCES DR	INSTALL HWY TRF SIG (ISOLATED)	ROD 5/8 X 10' COPPER GROUND (GROUND BOX)	R10-177 (30"X30") "LEFT TURN YIELD ON FLASHING YELLOW ARROW"	STREET NAME SIGN "FM 1472" (18"X66")	STREET NAME SIGN "<- La Flecha Ln / Las Cruces Dr ->" (18" x 90")	STREET NAME SIGN "<- Las Cruces Dr / La Flecha Ln ->" (18" x 90")	MAST ARM DAMPING PLATE	LED RDWY LUMINARIE (.25KW EQ)
UNIT	EA	EA	EA	EA	EA	EA	EA	EA
TOTAL	1	2	4	2	1	1	3	4

* NOTE: REVIEW SUMMAR OF TRAFFIC SIGNAL QUANTITIES SHEET FOR SUBSIDIARY ITEMS

ILLUMINATION SUMMARY

	618	624
	7040	7008
MINES RD & LAS CRUCES DR	CONDT (PVC) (SCH 40) (4")	GROUND BOX TY D (162922) W/A PRON
UNIT	LF	EA
TOTAL	**547**	**1**

LAS CRUCES REALIGNMENT

TRAFFIC SIGNAL & ILLUMINATION SUMMARY

SHEET 1 OF 1

KCI TECHNOLOGIES, INC.
2806 W. BITTERS RD. - SUITE 218
SAN ANTONIO, TX 78248 - 210.641.9999
TEXAS REGISTERED ENGINEERING FIRM
TBPE FIRM No. F-10573
www.kci.com

Texas Department of Transportation

FED.RD. DIV.NO.	FEDERAL AID PROJECT NO.		SHEET NO.
6	DMO 2012 (628)		19
STATE	DIST.	COUNTY	
TEXAS	LRD	WEBB	
CONT.	SECT.	JOB	HIGHWAY NO.
0922	33	076	CS

PLOTTED ON: 7/31/2025 @ 5:29:00 PM DESIGN FILENAME: X:\data\txdot\Projects\359700_LasCruces_FlechaWestLaredoCorridor\Summaries\LasCruces_TRAFF_ILLUM.dgn

PAVEMENT MARKING SUMMARY

	0644 7001	0644 7073	0666 7018	0666 7411	0666 7024	0666 7036	0666 7042	0666 7045	0666 7066	0666 7420	0666 7423	0666 7123	0666 7132	0672 7002	0672 7004
LOCATION	IN SM RD SN SUP&AM TY10BWG(1)SA(P)	REMOVE SM RD SN SUP & AM (1) SA (P)	REFL PAV MRK TY I (W) 8" (DOT) (100MIL)	REFL PAV MRK TY I (W) 6" (SLD) (100 MIL)	REFL PAV MRK TY I (W)8"(SLD) (100MIL)	REFL PAV MRK TY I (W)24"(SLD) (100MIL)	REFL PAV MRK TY I (W)(ARROW) (100MIL)	REFL PAV MRK TY I (W) (DBL ARROW) (100MIL)	REFL PAV MRK TY I (W) (WORD) (100MIL)	REFL PAV MRK TY I (Y) 6" (BRK) (100MIL)	REFL PAV MRK TY I (Y) 6" (SLD) (100MIL)	REFL PAV MRK TY I (Y) 24" (SLD) (100MIL)	REFL PAV MRK TY I (Y) (MED NOSE) (100MIL)	REFL PAV MRKR TY I-C	REFL PAV MRKR TY II-A-A
	EA	EA	LF	LF	LF	LF	EA	EA	EA	LF	LF	LF	EA	EA	EA
BEGIN TO STA 16+50	14	9		1060	423	176	2	2	2		1232	37		22	54
STA 16+50 TO END				732			2			100	1209	116	2		91
EXISTING LAS CRUCES											341				6
MINES RD			86		380	12	2		2		423			21	
FLECHA LANE					128		1	1	1		1285				
TOTALS	14	9	86	1792	931	188	7	3	5	100	4490	153	2	43	151

LAS CRUCES REALIGNMENT

PAVEMENT MARKING SUMMARY

SHEET 1 OF 1

KCI TECHNOLOGIES, INC.
2806 W. BITTERS RD. - SUITE 218
SAN ANTONIO, TX 78248 - 210.641.9999
TEXAS REGISTERED ENGINEERING FIRM
TBPE FIRM No. F-10573
www.kci.com

Texas Department of Transportation

FED.RD. DIV.NO.	FEDERAL AID PROJECT NO.		SHEET NO.
6	DMO 2012 (628)		20
STATE	DIST.	COUNTY	
TEXAS	LRD	WEBB	
CONT.	SECT.	JOB	HIGHWAY NO.
0922	33	076	CS

PLOTTED ON: 2/24/2025 @ 5:30:48 PM DESIGN FILENAME: X:\data\txdot\Projects\359700_LasCruces_Flecha\WestLaredoCorridorII\Summaries\LasCruces_PAV_MRK.dgn

SUMMARY OF SMALL SIGNS: LAS CRUCES DR.

SM RD SGN ASSM TY XXXXX (X) XX (X-XXXX)

Post Type: FRP = Fiberglass; TWT = Thin-Wall; 10BWG = 10 BWG; S80 = Sch 80

Posts (1 or 2)

Anchor Type: UA=Univer-Conc; UB=Univer-Bolt; SA=Slip-Conc; SB=Slip-Bolt; WS=Wedge Steel; WP=Wedge Plastic

Mounting Designation: P = Prefab. "Plain"; T = Prefab. "T"; U = Prefab. "U"

1EXT or 2EXT = # of Ext.; BM = Extruded Wind Beam; WC = 1.12 #/ft Wing Chan.; EXAL= Extruded Aluminum

PLAN SHEET NO.	SIGN NO.	SIGN NOMENCLATURE	SIGN TEXT	DIMENSIONS	ALUMINUM TYPE A	ALUMINUM TYPE G	Post Type	Posts (1 or 2)	Anchor Type	Mounting Designation	
1 OF 3	1	R3-8LTR	ADVANCED INTERSECTION LANE CONTROL	VAR x 30	X		10BWG	1	SA	P	
	2	R2-1	SPEED LIMIT 30	24 x 30	X		10BWG	1	SA	P	
	3	W1-8R	CHEVRON ALIGNMENT (RIGHT)	18 x 24	X		10BWG	1	SA	P	
	4	W1-8L	CHEVRON ALIGNMENT (LEFT)	18 x 24	X		10BWG	1	SA	P	
		W1-8R	CHEVRON ALIGNMENT (RIGHT)	18 x 24	X		10BWG		SA	P	
	5	W1-8L	CHEVRON ALIGNMENT (LEFT)	18 x 24	X		10BWG	1	SA	P	
		W1-8R	CHEVRON ALIGNMENT (RIGHT)	18 x 24	X		10BWG		SA	P	
	6	W1-8L	CHEVRON ALIGNMENT (LEFT)	18 x 24	X		10BWG	1	SA	P	
	7	W1-8L	CHEVRON ALIGNMENT (LEFT)	18 x 24	X		10BWG	1	SA	P	
	8	W1-8R	CHEVRON ALIGNMENT (RIGHT)	18 x 24	X		10BWG	1	SA	P	
		W1-8L	CHEVRON ALIGNMENT (LEFT)	18 x 24	X		10BWG		SA	P	
	9	W1-8R	CHEVRON ALIGNMENT (RIGHT)	18 x 24	X		10BWG	1	SA	P	
		W1-8L	CHEVRON ALIGNMENT (LEFT)	18 x 24	X		10BWG		SA	P	
	10	W1-8R	CHEVRON ALIGNMENT (RIGHT)	18 x 24	X		10BWG	1	SA	P	
	11	R2-1	SPEED LIMIT 30	24 x 30	X		10BWG	1	SA	P	
	Pb2, Pb5, Pb7	R10-3e(L)	PUSH BUTTON FOR WALK SIGNAL	9 x 15	X						
	Pb1, Pb3, Pb6	R10-3e(R)	PUSH BUTTON FOR WALK SIGNAL	9 x 15	X						
	Pb4	R10-3e(D)	PUSH BUTTON FOR WALK SIGNAL	9 x 15	X						
2 OF 3	1	W14-1	DEAD END	36 x 36	X		10BWG	1	SA	T	
3 OF 3	1	R3-5L	MANDATORY MOVEMENT LANE CONTROL (LEFT)	30 x 36	X		10BWG	1	SA	P	
	2	R6-1R	ONE WAY	36 x 12	X		10BWG	1	SA	P	
					SHEET TOTAL			14			
					PROJECT TOTAL			14			

ALUMINUM SIGN BLANKS (TYPE A)

Square Ft.	Min. Thickness
Less than 7.5	0.080"
7.5 to 15	0.100"
Greater than 15	0.125"

Sign supports shall be located as shown on the plans, except that the Engineer may shift the sign supports, within design guidelines, where necessary to secure a more desirable location or to avoid conflict with utilities. Unless otherwise shown on the plans, the Contractor shall stake and the Engineer will verify all sign support locations.

LAS CRUCES REALIGNMENT

SMALL SIGN SUMMARY

SHEET 1 OF 1

KCI TECHNOLOGIES, INC.
2806 W. BITTERS RD. - SUITE 218
SAN ANTONIO, TX 78248 - 210.641.9999
TEXAS REGISTERED ENGINEERING FIRM
TBPE FIRM No. F-10573
www.kci.com

Texas Department of Transportation

FED.RD. DIV.NO.	FEDERAL AID PROJECT NO.		SHEET NO.
6	DMO 2012 (628)		•
STATE	DIST.	COUNTY	
TEXAS	LRD	WEBB	
CONT.	SECT.	JOB	HIGHWAY NO.
0922	33	076	CS

PLOTTED ON: 8/1/2025 @ 9:04:33 AM DESIGN FILENAME: X:\data\txdot\Projects\359700_LasCruces_Flecha\WestLaredoCorridorII\Summaries\LasCruces_SGN_sum.dgn

GENERAL NOTES FOR THE CONSTRUCTION SEQUENCE & TRAFFIC CONTROL PLAN:

This is a suggested Traffic Control Plan (TCP). The Contractor may submit an alternate Traffic Control Plan, signed and sealed by a Licensed Professional Engineer in Texas, for approval by the Engineer. When mutually beneficial changes are proposed to the existing Traffic Control Plan and are agreed upon by the Contractor and the Department, the plan sheets may be developed and signed and sealed by the Engineer.

Furnish and install all Traffic Control Plans devices, including but not limited to barricades, signs, and work zone markings, in compliance with the latest version of the Texas Manual on Uniform Traffic Control Devices (TxMUTCD), the State Standard Traffic Control Plans (TCP) sheets, and the Barricades and Construction (BC) sheets. Refer to the project general notes for additional information regarding the Traffic Control Plan.

Verify the location and spacing of signs, barricades, and channelizing devices prior to their placement along vertical curves, horizontal curves, and other geometric constraints to assure visibility to all motorists.

Place the traffic control devices only while work is actually in progress or a definite need exists. Always have enough barricades, channelizing devices, and signs at all times to replace those damaged.

Cover all existing signs that conflict with the Traffic Control Plan and uncover during non-working hours or as directed by the Engineer. Partial coverage of the sign or coverage by material that will not cover the entire sign all the time is not permitted.

Vary the spacing of signs to meet traffic conditions or as directed by the engineer and assure that all traffic control devices and work zone pavement markings are kept in a highly visible condition (clean, upright and at proper location).

Maintain the roadway surface and work zone striping within the project while the traffic control plan is in effect. Place and be responsible for all work zone pavement markings in accordance with standard sheets WZ(STPM)-23, BC (10), BC (11) and the TxMUTCD.

Conduct construction operations so as to provide the least possible interference to traffic and to permit the continuous movement of traffic in all allowable directions at all times or as permitted by the sequence of construction. Provide for safe and convenient access to abutting property, highways, public roads, and street crossings except as otherwise shown on the sequence of construction. The contractor will maintain at all times two-way traffic or a minimum of one lane using a pilot vehicle and flaggers.

Place all stockpiled material, waste material, signs, barricades, channelizing devices and work vehicles not in use, at a minimum of 30 feet from the outer edge of the nearest travel lane.

Maintain all existing drainage conditions during all construction phases until the permanent drainage facilities are constructed and ready to use. Handle excavated and stockpiled material in such a way that it will not block drainage.

Regulate all construction traffic so as to cause a minimal inconvenience to the traveling public. At the times when it is necessary for trucks to stop, unload or cross roadways under traffic, provide warning signs and flaggers as needed to adequately protect the traveling public.

During non working hours all drop-offs are to be filled to a 3:1 maximum slope except as otherwise noted in the plans or as directed by the engineer.

Notify the Engineer in writing two weeks prior to shifting of traffic within each phase of the Traffic Control Plan.

During the holiday time frame of December 21st through January 1st, every effort should be taken to ensure that all travel lanes remain open where possible.

Remove from the work area all loose materials and debris resulting from construction operations at the end of each work day.

Maintain a minimum of one through lane open in each direction during working hours except as directed by the engineer.

GENERAL NOTES CONTINUED:

Implement all required erosion control measures as shown in the plans during the various stages of construction.

Moving an existing sign to a temporary location is subsidiary to this item. Installations with permanent supports at permanent locations will be paid for under the applicable bid item(s).

Use of portable changeable message sign as advance notice of lane closures will be required, as directed by the engineer. For locations that are adjacent to each other, a single sign in advance of the entire work area is acceptable.

Additional signs, barricades and channelizing devices may be required to maintain traffic during construction, as shown on TCP standards. Additional signs, barricades, etc. (if any), will be subsidiary to items 502 "Barricades, Signs and Traffic Handling".

Refer to "Treatment For Various Edge Conditions" sheet to be used when opening roadway(s) to traffic.

To restrict minimum number of lanes open during working hours. Not to be used with one way traffic control.

Maintain a minimum of one (1) through lane(s) open in each direction during working hours except as directed by the Engineer.

Refer to BC(6)-21 Portable Changeable Message Sign (PCMS) Standards for a listing of abbreviated words and two-word phrases that are acceptable for use on PCMS. Submit the suggested message for the board to the Engineer for approval.

Place portable changeable message boards at locations requiring lane closures for 3 weeks before the closures or as directed by the engineer.

Provide full-time off-duty uniformed peace officers in officially marked vehicles as part of traffic control operations. The peace officers must supply proof of certification by the Texas commission on law enforcement standards. This work will be paid for under the provisions of Item 9.

Use opposing lane dividers and vertical panels to channelize traffic when existing pavement markings have been obliterated.

For projects with Highway Traffic Signals.

Provide, at no additional cost to the City of Laredo, any adjustment, modifications or changes to the traffic signal heads, ground boxes, cable and other appurtenances associated with all existing traffic signal installations, as approved by the engineer, when deemed necessary for the safe handling of traffic in the work zone during construction of the permanent traffic signals.

For projects with manhole adjustments.

Place temporary asphalt around the manholes and/or valves to provide a minimum of 50:1 taper when manholes and/or valves are exposed to traffic. The cost of the elevation adjustment and asphalt tapers will not be paid for directly, but will be subsidiary to the price bid for other manhole and/or valve work.

The contractor shall maintain continuous access to all intersecting streets unless otherwise shown on these plans. When continuous access is scheduled to be blocked, the contractor shall contact the dispatchers for the fire department and EMS at (956) 718-6000 and the police department at (956) 795-2800, to apprise them of the pending street closure at least forty-eight hours in advance. If the closure falls along a bus route, the contractor shall contact Robert Murillo with El Metro at (956) 795-2288.

TRAFFIC CONTROL DEVICES
LOCATION MAP

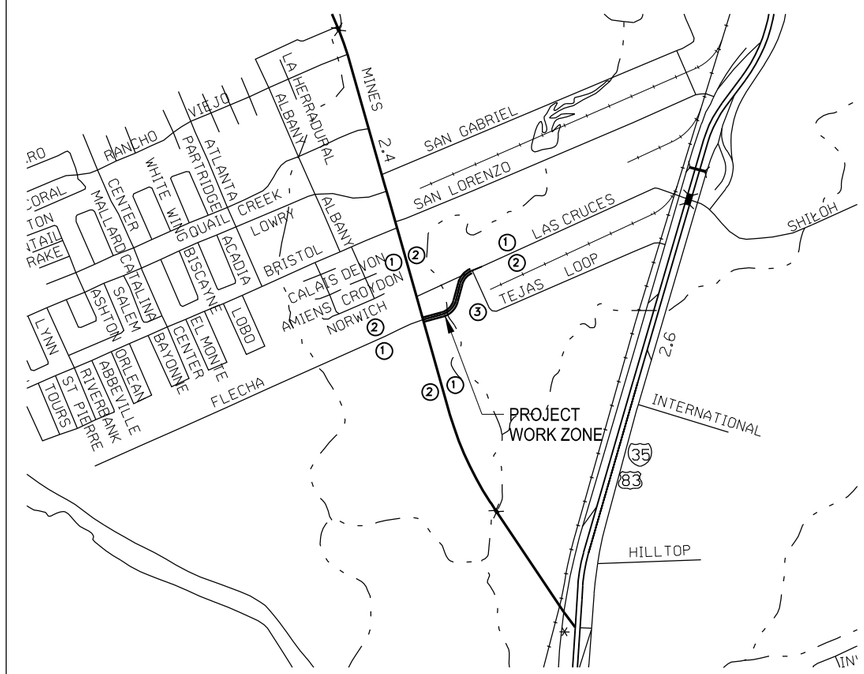

SCHEDULE OF TRAFFIC CONTROL AND ADVANCED WARNING DEVICES

LOCATION	USAGE	BEGIN ROAD WORK NEXT XX MI	NAME ADDRESS CITY STATE CONTRACTOR	WORK ZONE TRAFFIC FINES DOUBLE	GIVE US A BRAKE (48" x48")	OBEY WARNING SIGNS STATE LAW	ROAD WORK AHEAD	END ROAD WORK	BE PREPARED TO STOP				BUMP	UNEVEN LANES	LOOSE GRAVEL	ROAD CLOSED TO THRU TRAFFIC	ROAD CLOSED	ONE LANE ROAD AHEAD
	TYPE	G20-5T W/PLAQUE	SG20 -6	G20-9 R20-5 W/PLAQUE	CW21 -1T	R20-3	CW20 -1D	G20 -2a	CW20 -7b	CW20-7a + PLAQUE	CHANNELIZING DEVICES		CW8-1	CW8-11	CW8-7	R11-4	R11-2	CW20 -4D
1	ROAD APPROACHES TO PROJECT	x	x	x	x	x	x											
2	ROAD DEPARTURES FROM PROJECT							x										
3	CROSSROAD						x	x										
*	AS DIRECTED BY THE ENGINEER				x				x	x	x	x	x	x	x	x	x	x

NOTE :
1. CERTAIN SIGNS MUST BE USED IN CONJUNCTION WITH OTHER SIGNS. EXAMPLE: "FLAGGER AHEAD" MUST HAVE A "BE PREPARED TO STOP".
2. BARRICADES AND WARNING SIGNS ON THIS SHEET ARE MINIMAL CONSTRUCTION ZONE SIGNING. ADDITIONAL BARRICADES, WARNING SIGNS, ARROW PANELS, CONES, ETC. IN ACCORDANCE WITH BC(1) THRU (12) AND THE TEXAS MUTCD MAY BE REQUIRED IN AREAS OF ACTUAL CONSTRUCTION.
3. SEE TCP SHEETS FOR ADDITIONAL SIGNING REQUIREMEMNTS.

APPLICABLE TCP SHEETS FOR THIS PROJECT ARE:
TCP (1-2) - 18, TCP (2-4) - 18, TCP (2-5) - 18, TCP (3-1) - 13, TCP (3-3) - 14, TCP (7-1) - 13

* TO BE USED IN AREAS OF CONSTRUCTION AS SHOWN ON CONSTRUCTION PHASING SHEETS OR AS DIRECTED BY THE ENGINEER.

TMUTCD TAKE PRIORITY OVER EXISTING "BC" STANDARDS.

STATE OF TEXAS
KYLE GASS
94833
LICENSED PROFESSIONAL ENGINEER

KYLE GASS, P.E.
7/31/2025

LAS CRUCES REALIGNMENT

SCHEDULE OF TRAFFIC CONTROL AND ADVANCED WARNING DEVICES

SHEET 1 OF 1

KCI TECHNOLOGIES, INC.
2806 W. BITTERS RD. - SUITE 218
SAN ANTONIO, TX 78248 - 210.641.9999
TEXAS REGISTERED ENGINEERING FIRM
TBPE FIRM No. F-10573
www.kci.com

Texas Department of Transportation

FED.RD. DIV.NO.	FEDERAL AID PROJECT NO.		SHEET NO.
6	DMO 2012 (628)		22
STATE	DIST.	COUNTY	
TEXAS	LRD	WEBB	
CONT.	SECT.	JOB	HIGHWAY NO.
0922	33	076	CS

PLOTTED ON: 2/24/2025 @ 5:29:48 PM DESIGN FILENAME: X:\data\txdot\Projects\359700_LasCruces_Flecha\WestLaredoCorridor\TCP\LasCruces_Sched-of-TCD.dgn

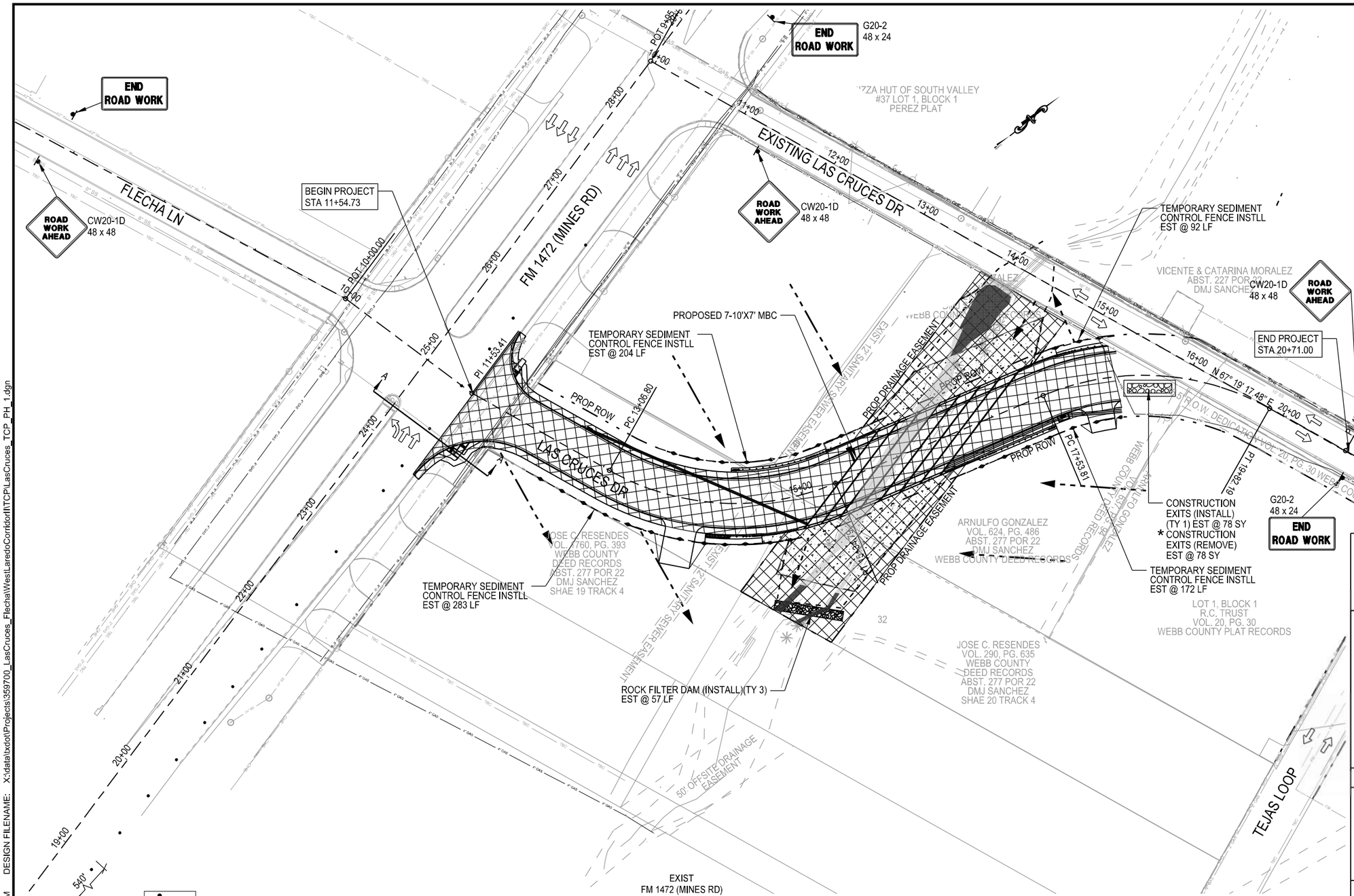

TCP LEGEND

- WORK AREA
- TY III BARRICADE
- SIGN
- EXIST TRAFFIC ARROW
- PROP TRAFFIC ARROW
- CHANNELIZING DEVICES
- FLASHING ARROW BOARD
- JURISDICTIONAL WATERS WILL BE DISTURBED
- JURISDICTIONAL WATERS TO BE PRESERVED. DO NOT DISTURB THIS AREA

SW3P LEGEND

- ROCK FILTER DAM (TY I)
- TEMPORARY SEDIMENT CONTROL FENCE
- CONSTRUCTION EXIT
- DIRECTIONAL DRAINAGE FLOW ARROW

NOTE: SEE TCP STANDARDS FOR SIGN SPACING AND LENGTH OF TAPERS.

* CONSTRUCTON EXIT TO BE REMOVED PRIOR TO PAVING OPERATION.

GRAPHIC SCALE
(IN FEET)
50 25 0 50 100 150
1" = 100'

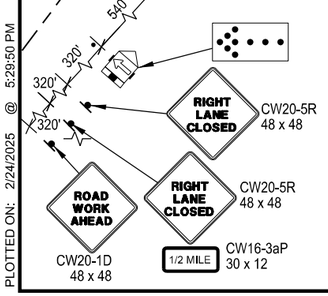

SEQUENCE OF WORK NARRATIVE

- IT IS THE CONTRACTOR'S RESPOSIBILITY TO VERIFY THE LOCATION OF ALL UTILITIES PRIOR TO BEGINNING ANY PHASE OF WORK.

PHASE 1

- PLACE BARRICADES ALONG FM1472 - TCP (2-5)-18.
- CONSTRUCT PROPOSED SIGNALS. REFER TO TEMPORARY TRAFFIC SIGNAL LAYOUT.
- CONSTRUCT LAS CRUSES REALIGNMENT FROM STA 11+54 TO STA 18+30 INCLUDING CULVERT AND STORM DRAINAGE.
- PERFORM CHANNEL GRADING AND CONSTRUCT RIPRAP IN CHANNEL.

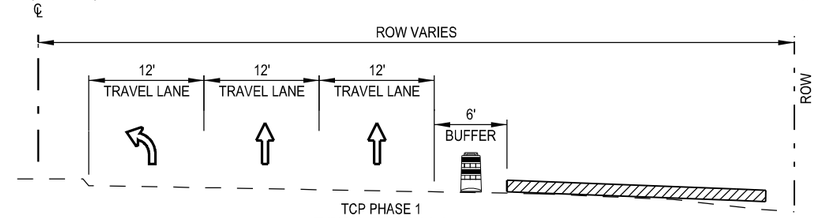

TCP PHASE 1
TYPICAL SECTION A-A

STATE OF TEXAS
KYLE GASS
94833
LICENSED PROFESSIONAL ENGINEER

KYLE GASS, P.E.
7/31/2025

LAS CRUCES REALIGNMENT

TRAFFIC CONTROL PLAN
SEQUENCE OF WORK
PHASE 1

SHEET 1 OF 1

KCI TECHNOLOGIES, INC.
2806 W. BITTERS RD. - SUITE 218
SAN ANTONIO, TX 78248 - 210.641.9999
TEXAS REGISTERED ENGINEERING FIRM
TBPE FIRM No. F-10573
www.kci.com

Texas Department of Transportation

FED.RD. DIV.NO.	FEDERAL AID PROJECT NO.		SHEET NO.
6	DMO 2012 (628)		23
STATE	DIST.	COUNTY	
TEXAS	LRD	WEBB	
CONT.	SECT.	JOB	HIGHWAY NO.
0922	33	076	CS

PLOTTED ON: 2/24/2025 @ 5:29:50 PM DESIGN FILENAME: X:\data\txdot\Projects\359700_LasCruces_Flecha\WestLaredoCorridor\TCP\LasCruces_TCP_PH_1.dgn

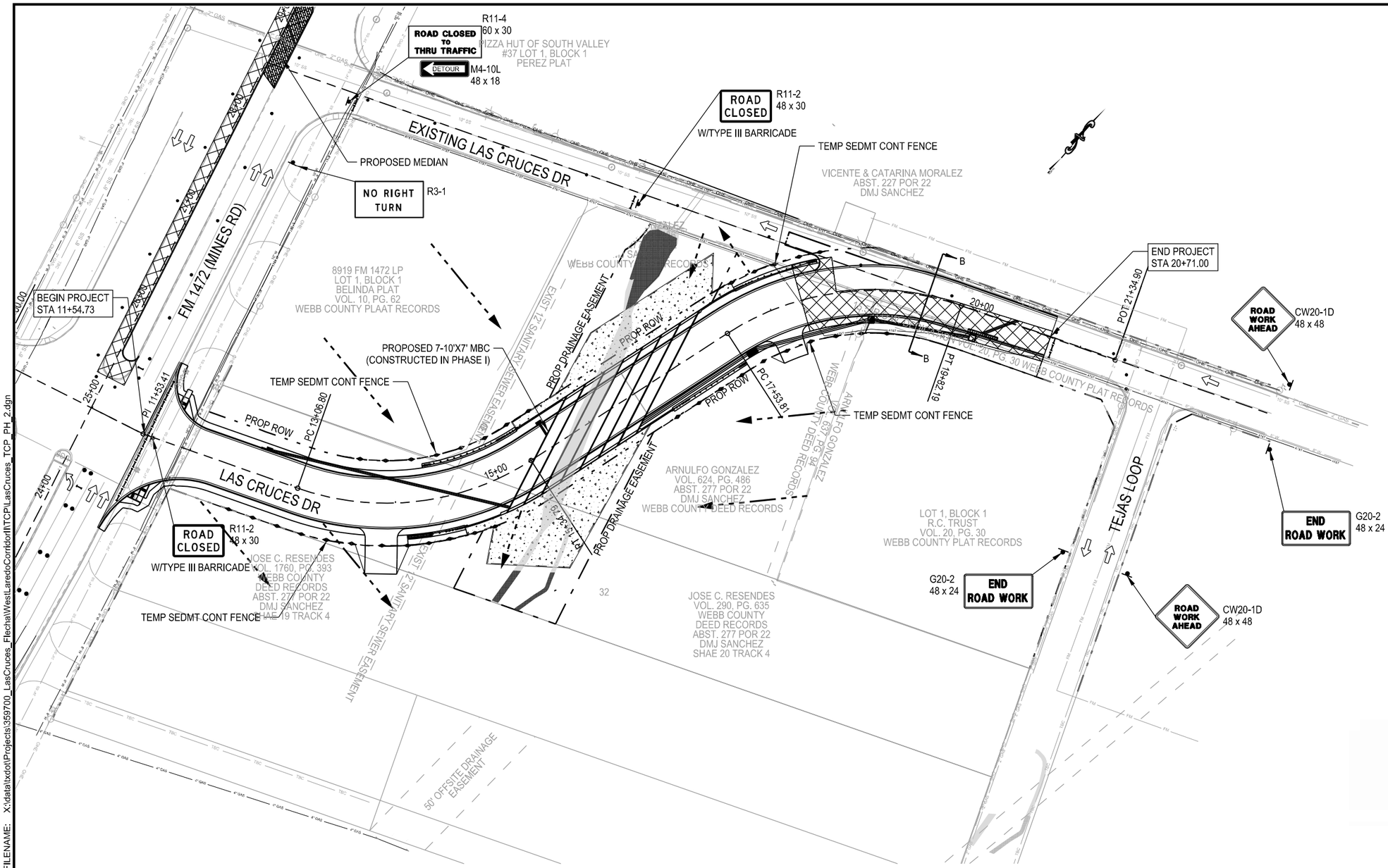

TCP LEGEND

- WORK AREA
- TY III BARRICADE
- SIGN
- EXIST TRAFFIC ARROW
- PROP TRAFFIC ARROW
- CHANNELIZING DEVICES
- FLASHING ARROW BOARD
- JURISDICTIONAL WATERS WILL BE DISTURBED
- JURISDICTIONAL WATERS TO BE PRESERVED. DO NOT DISTURB THIS AREA

SW3P LEGEND

- ROCK FILTER DAM (TY I)
- TEMPORARY SEDIMENT CONTROL FENCE
- CONSTRUCTION EXIT
- DIRECTIONAL DRAINAGE FLOW ARROW

NOTE: SEE TCP STANDARDS FOR SIGN SPACING AND LENGTH OF TAPERS.

GRAPHIC SCALE
(IN FEET)
50 25 0 50 100 150
1" = 100'

STATE OF TEXAS
KYLE GASS
94833
LICENSED
PROFESSIONAL ENGINEER

KYLE GASS, P.E.
7/31/2025

LAS CRUCES REALIGNMENT

TRAFFIC CONTROL PLAN
SEQUENCE OF WORK
PHASE 2

SHEET 1 OF 2

KCI TECHNOLOGIES, INC.
2806 W. BITTERS RD. - SUITE 218
SAN ANTONIO, TX 78248 - 210.641.9999
TEXAS REGISTERED ENGINEERING FIRM
TBPE FIRM No. F-10573
www.kci.com

Texas Department of Transportation

FED.RD. DIV.NO.	FEDERAL AID PROJECT NO.		SHEET NO.
6	DMO 2012 (628)		24
STATE	DIST.	COUNTY	
TEXAS	LRD	WEBB	
CONT.	SECT.	JOB	HIGHWAY NO.
0922	33	076	CS

SEQUENCE OF WORK NARRATIVE
PHASE 2

- SET DETOUR ROUTE FOR ONE LANE CLOSURE OF EXISTING LAS CRUCES
- CONSTRUCT LAS CRUCES REALIGNMENT FROM STA 18+30 TO END PROJECT, INCLUDING STORM DRAINAGE.
- MAINTAIN ONE WAY WESTBOUND TRAFFIC ON EXISTING LAS CRUCES DR.

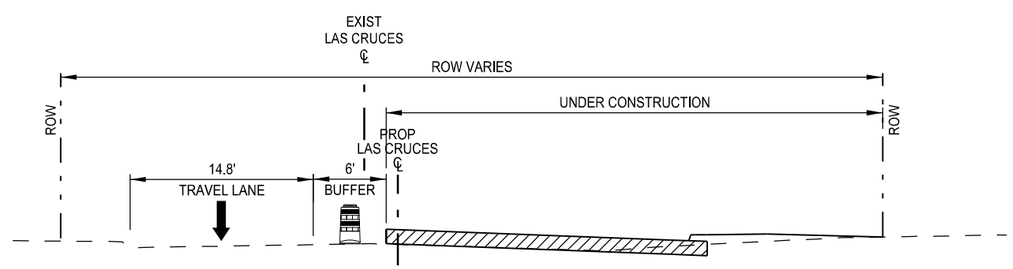

TCP PHASE 2
TYPICAL SECTION B - B

PLOTTED ON: 2/27/2025 @ 8:37:42 AM DESIGN FILENAME: X:\data\xdot\Projects\359700_LasCruces_Flecha\WestLaredoCorridor\TCP\LasCruces_TCP_PH_2.dgn

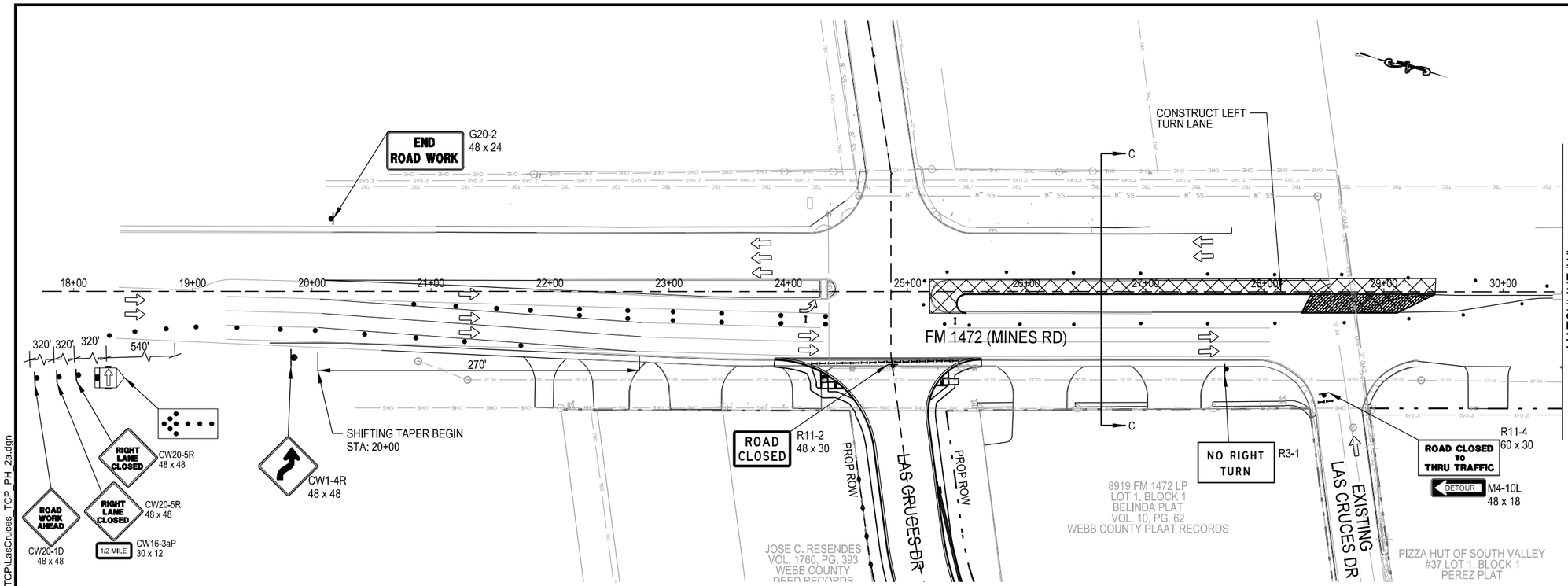

TCP LEGEND

- WORK AREA
- TY III BARRICADE
- SIGN
- EXIST TRAFFIC ARROW
- PROP TRAFFIC ARROW
- CHANNELIZING DEVICES
- PROP MEDIAN
- FLASHING ARROW BOARD

NOTE: SEE TCP STANDARDS FOR SIGN SPACING AND LENGTH OF TAPERS.

GRAPHIC SCALE
(IN FEET)
50 25 0 50 100 150
1" = 100'

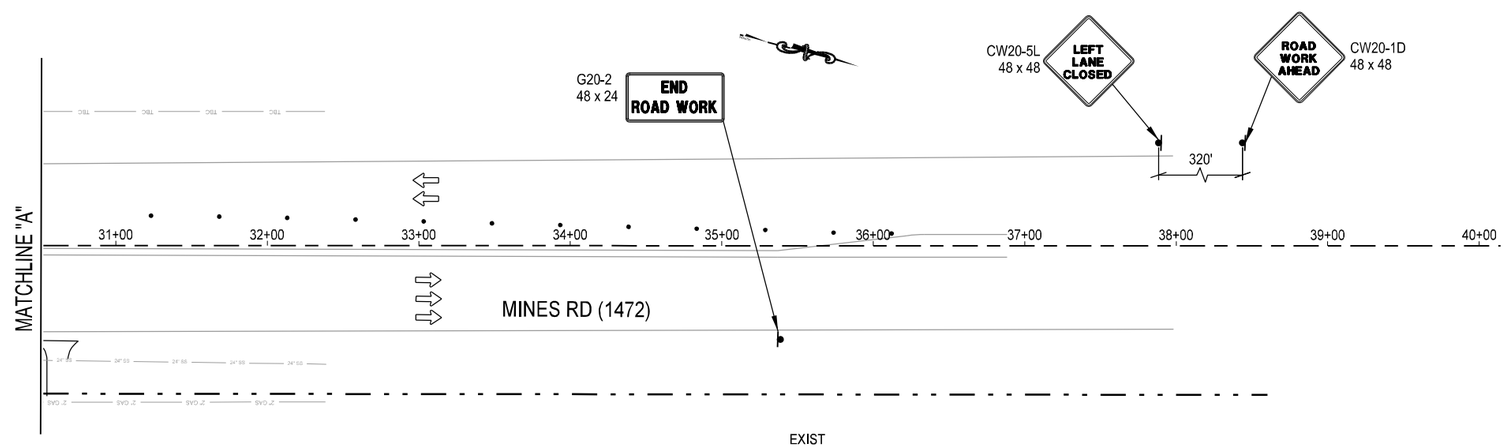

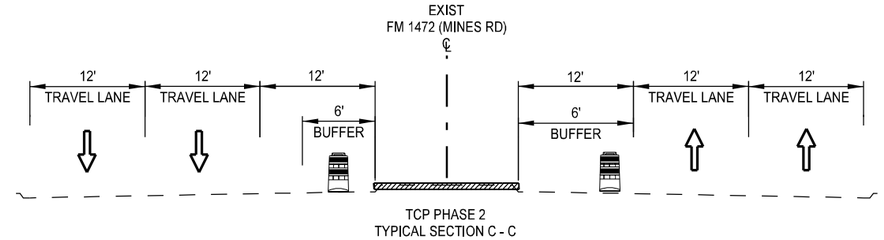

TCP PHASE 2
TYPICAL SECTION C - C

SEQUENCE OF WORK NARRATIVE

PHASE 2

- PLACE BARRICADES ALONG FM1472 TO CLOSE INSIDE SOUTHBOUND LANE AND INSIDE NORTHBOUND LANE
- CONSTRUCT S.B. FM 1472 LEFT TURN LANE AND CONSTRUCT MEDIAN ACROSS EXISTING OPENING AT INTERSECTION FM 1472 AND EXISTING LAS CRUCES DR.
- ADJUST/CONSTRUCT SIGNALS AT FM 1472 INTERSECTION.

STATE OF TEXAS
KYLE GASS
94833
LICENSED
PROFESSIONAL ENGINEER

KYLE GASS, P.E.
7/31/2025

LAS CRUCES REALIGNMENT

TRAFFIC CONTROL PLAN
SEQUENCE OF WORK
PHASE 2

SHEET 2 OF 2

KCI TECHNOLOGIES, INC.
2806 W. BITTERS RD. - SUITE 218
SAN ANTONIO, TX 78248 - 210.641.9999
TEXAS REGISTERED ENGINEERING FIRM
TBPE FIRM No. F-10573
www.kci.com

Texas Department of Transportation

FED.RD. DIV.NO.	FEDERAL AID PROJECT NO.		SHEET NO.
6	DMO 2012 (628)		25
STATE	DIST.	COUNTY	
TEXAS	LRD	WEBB	
CONT.	SECT.	JOB	HIGHWAY NO.
0922	33	076	CS

PLOTTED ON: 2/24/2025 @ 5:29:51 PM DESIGN FILENAME: X:\data\txdot\Projects\359700_LasCruces_Flecha\WestLaredoCorridor\TCP\LasCruces_TCP_PH_2a.dgn

PLOTTED ON: 2/27/2025 @ 8:32:03 AM DESIGN FILENAME: X:\data\txdot\Projects\359700_LasCruces_FlechaWestLaredoCorridor\TCP\LasCruces_TCP_PH_3.dgn

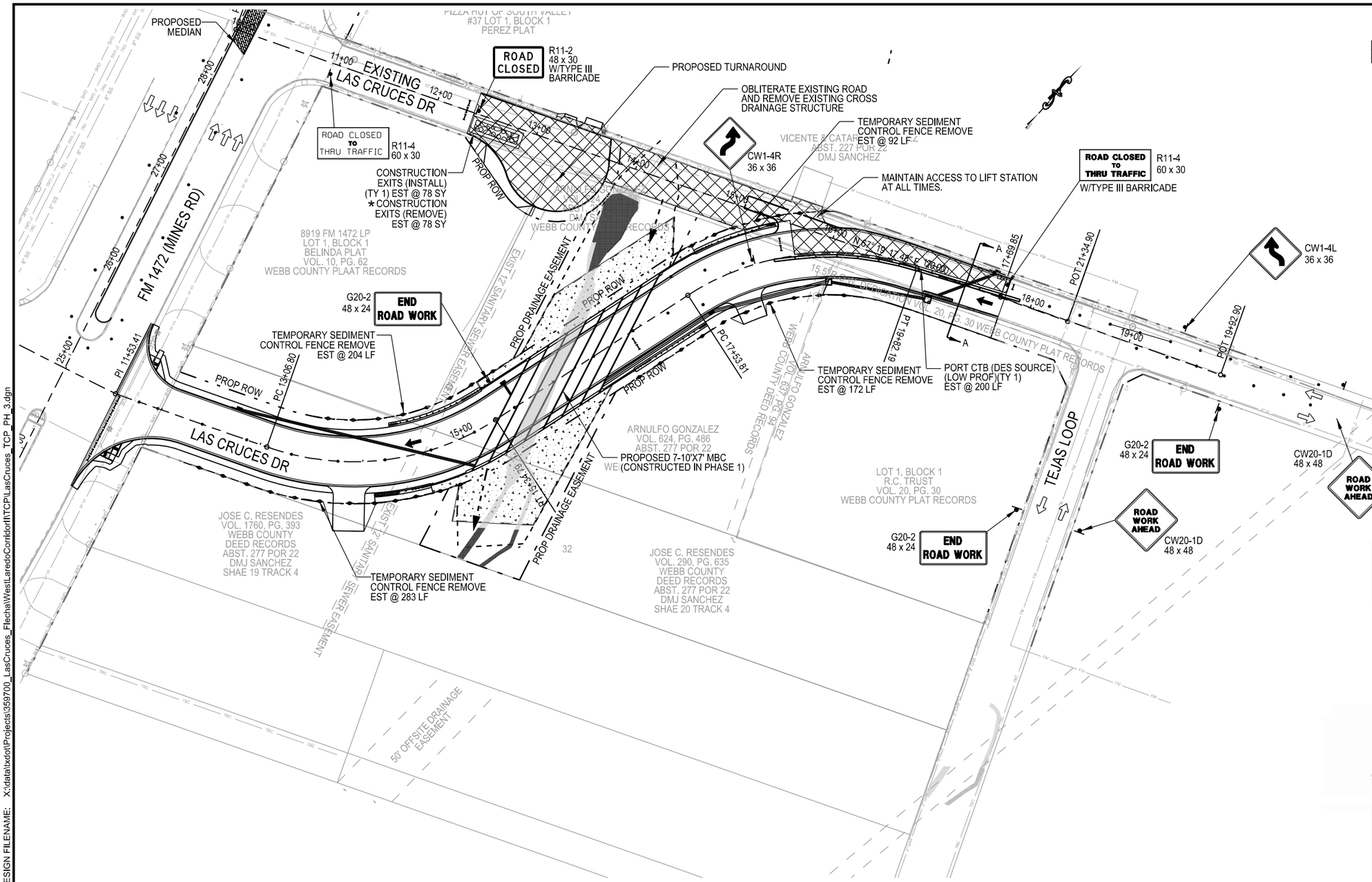

TCP LEGEND

- WORK AREA
- TY III BARRICADE
- SIGN
- EXIST TRAFFIC ARROW
- PROP TRAFFIC ARROW
- CHANNELIZING DEVICES
- LOW PROFILE BARRIER
- CW6-4 TRAFFIC LANE DIVIDERS
- JURISDICTIONAL WATERS WILL BE DISTURBED
- JURISDICTIONAL WATERS TO BE PRESERVED. DO NOT DISTURB THIS AREA

SW3P LEGEND

- ROCK FILTER DAM (TY I)
- TEMPORARY SEDIMENT CONTROL FENCE
- CONSTRUCTION EXIT
- DIRECTIONAL DRAINAGE FLOW ARROW

NOTE: SEE TCP STANDARDS FOR SIGN SPACING AND LENGTH OF TAPERS.

SEE REMOVAL SHEET FOR LIMITS OF OBLITERATED ROAD.

* CONSTRUCTON EXIT TO BE REMOVED PRIOR TO PAVING OPERATION.

GRAPHIC SCALE
(IN FEET)
50 25 0 50 100 150
1" = 100'

STATE OF TEXAS
KYLE GASS
94833
LICENSED PROFESSIONAL ENGINEER

KYLE GASS, P.E.
7/31/2025

LAS CRUCES REALIGNMENT

TRAFFIC CONTROL PLAN
SEQUENCE OF WORK
PHASE 3

SHEET 1 OF 1

SEQUENCE OF WORK NARRATIVE

PHASE 3

- CONSTRUCT REMAINING OF LAS CRUCES REALIGNMENT FROM STA 18+30 TO END PROJECT. MAINTAIN ONE WAY WESTBOUND TRAFFIC ON PROPOSED LAS CRUCES DRIVE
- DEMO EXISTING LAS CRUCES AND REMOVE EXISTING DRAINAGE STRUCTURE, EXTEND CHANNEL GRADING THROUGH EXISTING LAS CRUCES DR.
- CONSTRUCT TURNAROUND AT EXISTING LAS CRUCES ALIGNMENT
- PORT CTB (LOW PROF)(TY 1 & 2) WILL BE REMOVED AT COMPLETION OF PHASE 3.
- TEMP SEDIMENT CONTROL FENCES AND CONSTRUCTION EXITS WILL BE REMOVED AT COMPLETION OF PHASE 3

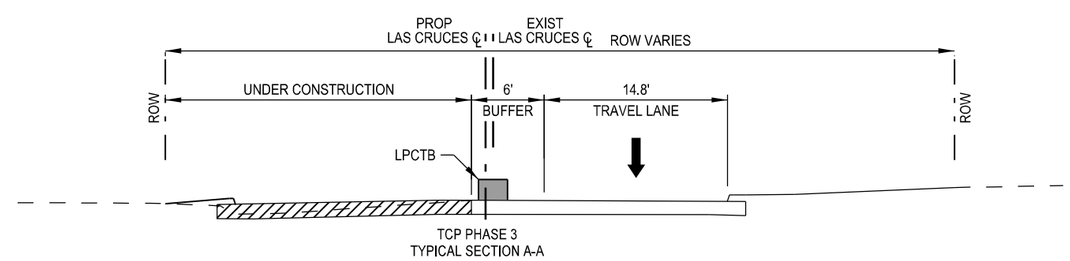

TCP PHASE 3
TYPICAL SECTION A-A

KCI TECHNOLOGIES, INC.
2806 W. BITTERS RD. - SUITE 218
SAN ANTONIO, TX 78248 - 210.641.9999
TEXAS REGISTERED ENGINEERING FIRM
TBPE FIRM No. F-10573
www.kci.com

Texas Department of Transportation

FED.RD. DIV.NO.	FEDERAL AID PROJECT NO.		SHEET NO.
6	DMO 2012 (628)		26
STATE	DIST.	COUNTY	
TEXAS	LRD	WEBB	
CONT.	SECT.	JOB	HIGHWAY NO.
0922	33	076	CS

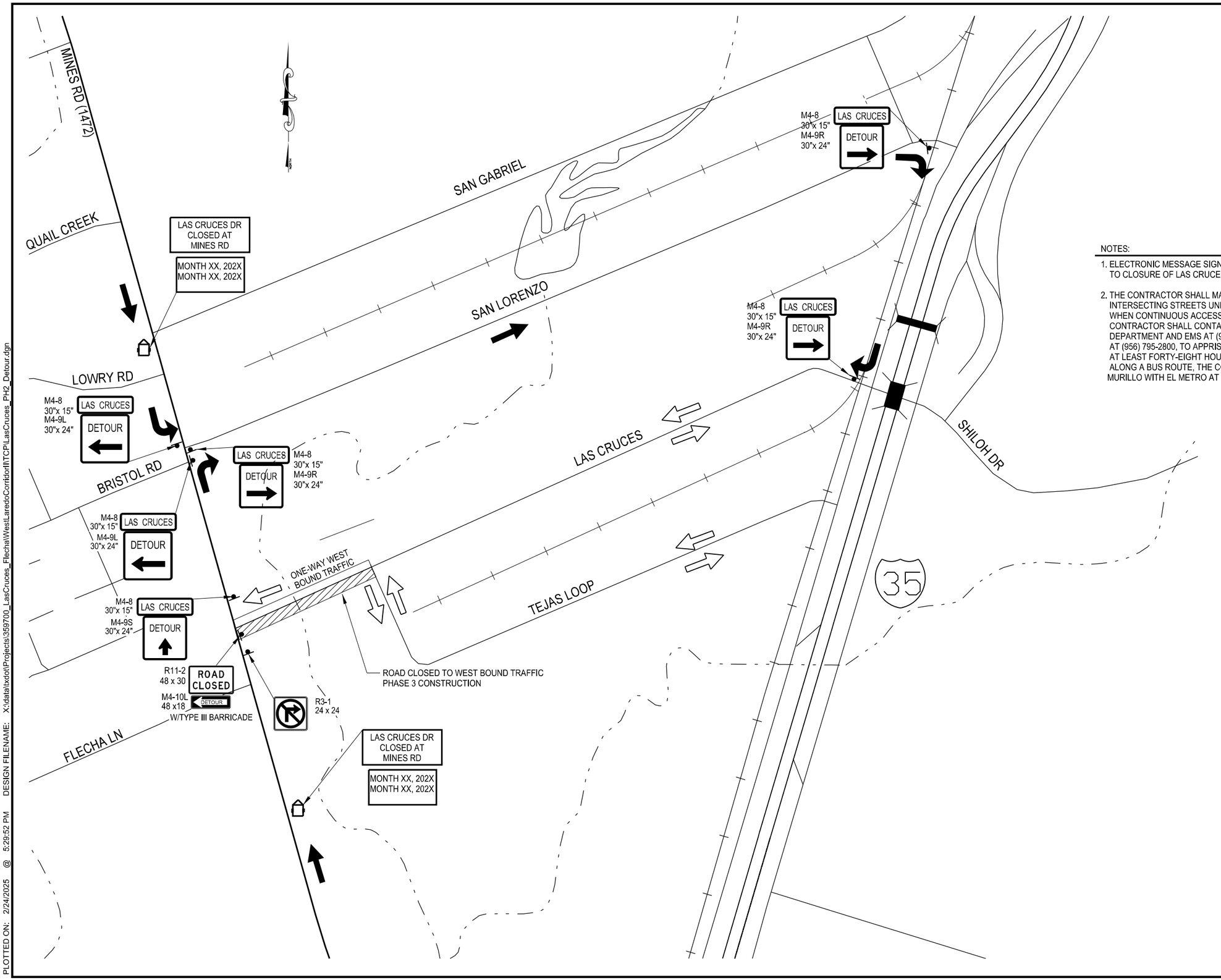

TCP LEGEND

- ROAD CLOSED
- EXISTING TRAFFIC
- DETOUR TRAFFIC
- SIGN
- ELECTRONIC MESSAGE SIGN

NOTES:

1. ELECTRONIC MESSAGE SIGNS WILL BE PLACED 7 DAYS PRIOR TO CLOSURE OF LAS CRUCES DR.
2. THE CONTRACTOR SHALL MAINTAIN CONTINUOUS ACCESS TO ALL INTERSECTING STREETS UNLESS OTHERWISE SHOWN ON THESE PLANS. WHEN CONTINUOUS ACCESS IS SCHEDULED TO BE BLOCKED, THE CONTRACTOR SHALL CONTACT THE DISPATCHERS FOR THE FIRE DEPARTMENT AND EMS AT (956) 718-6000 AND THE POLICE DEPARTMENT AT (956) 795-2800, TO APPRISE THEM OF THE PENDING STREET CLOSURE AT LEAST FORTY-EIGHT HOURS IN ADVANCE. IF THE CLOSURE FALLS ALONG A BUS ROUTE, THE CONTRACTOR SHALL CONTACT ROBERTO MURILLO WITH EL METRO AT (956) 795-2288.

NOT TO SCALE

STATE OF TEXAS
KYLE GASS
94833
LICENSED
PROFESSIONAL ENGINEER

KYLE GASS, P.E.
7/31/2025

LAS CRUCES REALIGNMENT

TCP PHASE 2
DETOUR LAYOUT

SHEET 1 OF 1

KCI TECHNOLOGIES, INC.
2806 W. BITTERS RD. - SUITE 218
SAN ANTONIO, TX 78248 - 210.641.9999
TEXAS REGISTERED ENGINEERING FIRM
TBPE FIRM No. F-10573
www.kci.com

Texas Department of Transportation

FED.RD. DIV.NO.	FEDERAL AID PROJECT NO.		SHEET NO.
6	DMO 2012 (628)		27
STATE	DIST.	COUNTY	
TEXAS	LRD	WEBB	
CONT.	SECT.	JOB	HIGHWAY NO.
0922	33	076	CS

PLOTTED ON: 2/24/2025 @ 5:29:52 PM DESIGN FILENAME: X:\data\txdot\Projects\359700_LasCruces_FlechaWestLaredoCorridor\TCP\LasCruces_PH2_Detour.dgn

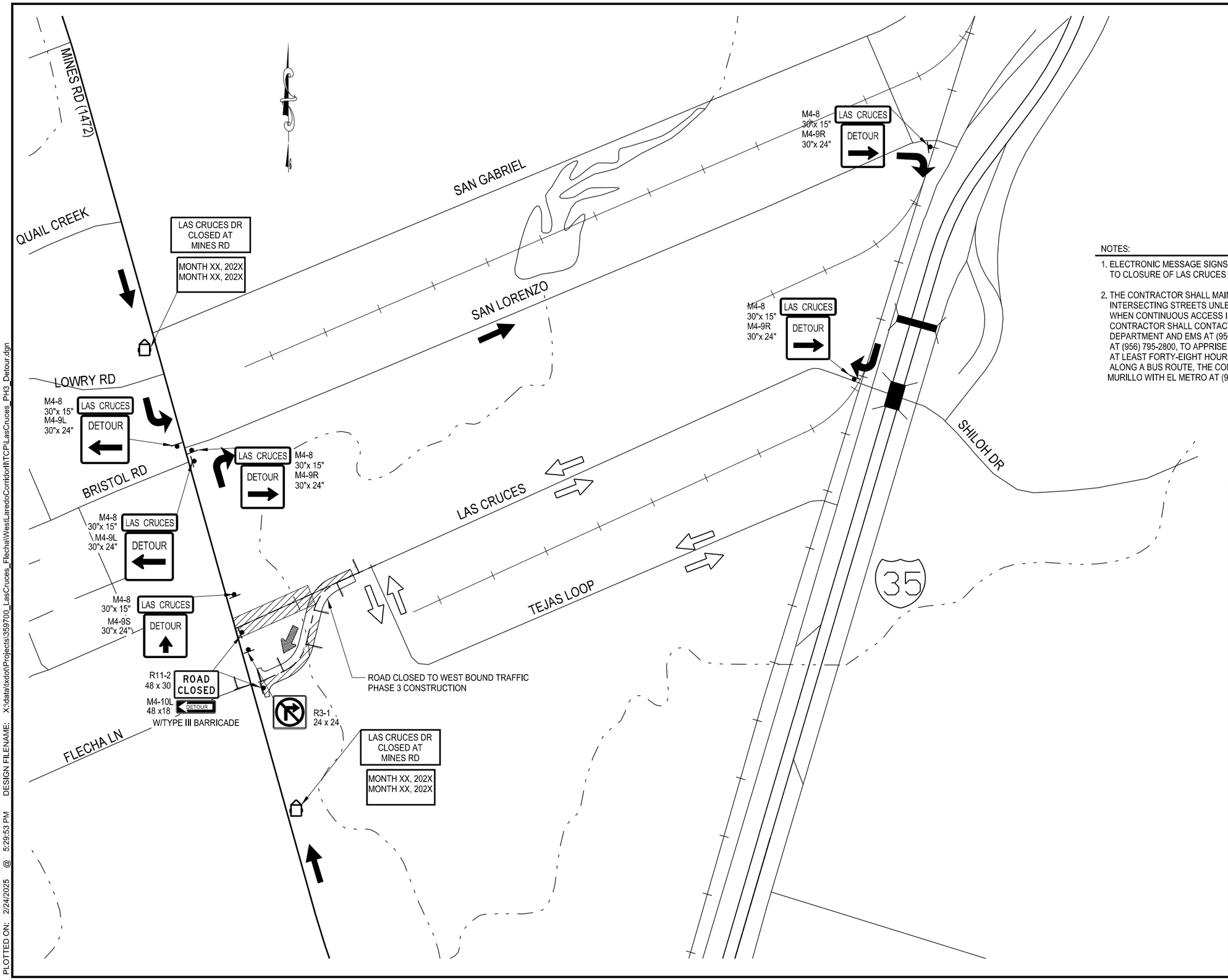

TCP LEGEND

- ROAD CLOSED
- EXISTING TRAFFIC
- PROPOSED TRAFFIC
- DETOUR TRAFFIC
- SIGN
- ELECTRONIC MESSAGE SIGN

NOTES:

1. ELECTRONIC MESSAGE SIGNS WILL BE PLACED 7 DAYS PRIOR TO CLOSURE OF LAS CRUCES DR.
2. THE CONTRACTOR SHALL MAINTAIN CONTINUOUS ACCESS TO ALL INTERSECTING STREETS UNLESS OTHERWISE SHOWN ON THESE PLANS. WHEN CONTINUOUS ACCESS IS SCHEDULED TO BE BLOCKED, THE CONTRACTOR SHALL CONTACT THE DISPATCHERS FOR THE FIRE DEPARTMENT AND EMS AT (956) 718-6000 AND THE POLICE DEPARTMENT AT (956) 795-2800, TO APPRISE THEM OF THE PENDING STREET CLOSURE AT LEAST FORTY-EIGHT HOURS IN ADVANCE. IF THE CLOSURE FALLS ALONG A BUS ROUTE, THE CONTRACTOR SHALL CONTACT ROBERTO MURILLO WITH EL METRO AT (956) 795-2288.

NOT TO SCALE

STATE OF TEXAS
KYLE GASS
94833
LICENSED
PROFESSIONAL ENGINEER

KYLE GASS, P.E.
7/31/2025

LAS CRUCES REALIGNMENT

TCP PHASE 3
DETOUR LAYOUT

SHEET 1 OF 1

KCI TECHNOLOGIES, INC.
2806 W. BITTERS RD. - SUITE 218
SAN ANTONIO, TX 78248 - 210.641.9999
TEXAS REGISTERED ENGINEERING FIRM
TBPE FIRM No. F-10573
www.kci.com

Texas Department of Transportation

FED.RD. DIV.NO.	FEDERAL AID PROJECT NO.		SHEET NO.
6	DMO 2012 (628)		28
STATE	DIST.	COUNTY	
TEXAS	LRD	WEBB	
CONT.	SECT.	JOB	HIGHWAY NO.
0922	33	076	CS

PLOTTED ON: 2/24/2025 @ 5:29:53 PM DESIGN FILENAME: X:\data\txdot\Projects\359700_LasCruces_FlechaWestLaredoCorridor\TCP\LasCruces_PH3_Detour.dgn

TEMPORARY TRAFFIC SIGNAL NOTES

GENERAL NOTES:

1. EXISTING SERVICE METER "E-A" AND CONTROLLER "E-B" ARE TO REMAIN FOR TEMPORARY SIGNAL.
2. CONTRACTOR SHALL CONNECT/SHIFT TEMPORARY TRAFFIC SIGNAL DURING OFF-PEAK HOURS. PROVIDE POLICE OFFICER AS NEEDED FOR TRAFFIC CONTROL

PHASE 1

1. INSTALL TEMPORARY SIGNAL BEFORE PHASE 1 WORK IN THIS AREA.
2. EXISTING SERVICE METER "E-A" AND CONTROLLER "E-B" ARE TO REMAIN FOR TEMPORARY SIGNAL.
3. EXISTING MAST ARM POLE "E-F" (INCLUDING VEHICLE SIGNAL HEADS 6 & 7, VIDEO DETECTION VIVDS V2, PED SIGNAL HEAD W6, PUSH BUTTON Pb5, AND MAST ARM SIGNS S2 & S5) ARE TO BE REMOVED.
4. EXISTING PEDESTAL POLE "E-G" IS TO REMAIN. PEDESTRIAN SIGNAL HEADS W4 & W5 AND PUSH BUTTON Pb4 ARE TO BE BAGGED.
5. EXISTING MAST ARM POLES "E-C" IS TO REMAIN. ALL VEHICULAR SIGNAL HEADS, VIDEO DETECTION VIVDS, AND MAST ARMS SIGNS ARE TO REMAIN UNBAGGED AND OPERATIONAL. PED SIGNAL HEAD W2 AND PUSH BUTTON Pb2 ARE TO REMAI UNBAGGED AND OPERATIONAL. PED SIGNAL HEAD W3 AND PUSH BUTTON Pb3 ARE TO BE BAGGED.
6. EXISTING PEDESTAL POLE "E-D" IS TO REMAIN. PEDESTRIAN SIGNAL HEAD W1 AND PUSH BUTTON Pb1 ARE TO REMAIN UNBAGGED AND OPERATIONAL.
7. EXISTING MAST ARM POLES "E-E" IS TO REMAIN. ALL VEHICULAR SIGNAL HEADS, VIDEO DETECTION VIVDS, AND MAST ARMS SIGNS ARE TO REMAIN UNBAGGED AND OPERATIONAL.
8. INSTALL 40' TIMBER POLES "T-A, T-B,& T-C" WITH SPAN WIRE AND 2 DOWN GUYS PER POLE.
9. INSTALL TEMPORARY VEHICLE SIGNAL HEADS 1 & 2 ON SPAN WIRE AS SHOWN. INSTALL TEMPROARY VIDEO DETECTION V4 ON TEMPORARY POLE "T-A" AS SHOWN. INSTALL TEMPORARY LUMINAIRE ON TEMPORARY POLE "T-B" AS SHOWN. INSTALL SPAN WIRE SIGNS S1 & S2 AS SHOWN.
10. INSTALL CONDUIT AND SIGNAL WIRING AS SHOWN ON SIGNAL LAYOUT AND CONDUCTOR & CONDUIT SCHEDULE.

EXISTING TRAFFIC LEGEND

- EXIST MAST ARM SIGNAL POLE
- EXIST PEDESTRIAN SIGNAL POLE
- EXIST SIGNAL HEAD W/ BACKPLATE
- EXIST PEDESTRIAN SIGNAL HEAD
- EXIST PEDESTRIAN PUSH BUTTON
- EXIST CONTROLLER CABINET
- EXIST ELECTRICAL SERVICE
- EXIST VIDEO DETECTION (VIVDS)
- EXIST MAST ARM SIGN
- EXIST LUMINAIRE
- EXIST UNI-DIRECTIONAL ANTENNA
- EXIST GROUND BOX
- EXIST CONDUIT
- EXIST OVERHEAD ELECTRIC
- EXIST RIGHT OF WAY
- E-A — EXIST CONTROLLER/ POLE IDENTIFIER

TEMPORARY TRAFFIC LEGEND

- TEMP. 40' TIMBER POLE AND SPAN WIRE COMBINATION WITH 2 DOWN GUYS
- TEMP. SIGNAL HEAD W/BACKPLATE
- TEMP. VIDEO DETECTION (VIVDS)
- TEMP. SPAN WIRE SIGN
- TEMP. TY D GROUND BOX
- TEMP. LUMINAIRE
- TEMP. CONDUIT (TRENCH)
- T-A — TEMP. CONTROLLER/POLE IDENTIFIER
- 1 — TEMP. SIGNAL HEAD IDENTIFIER
- S1 — TEMP. SIGN IDENTIFIER
- 1 — TEMP. CABLE RUN IDENTIFIER

EXISTING MAST ARM SIGN LEGEND

EXISTING PEDESTRIAN SIGN LEGEND

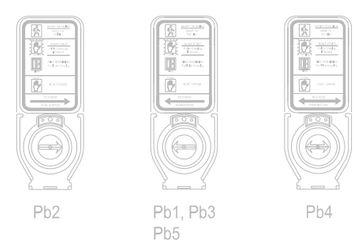

EXISTING SIGNAL HEAD LEGEND

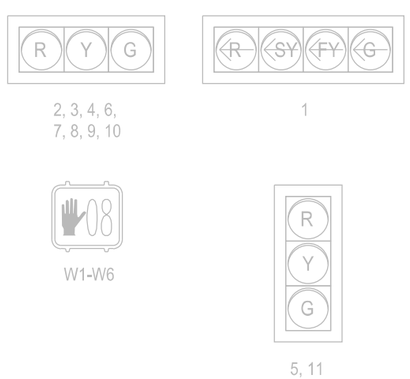

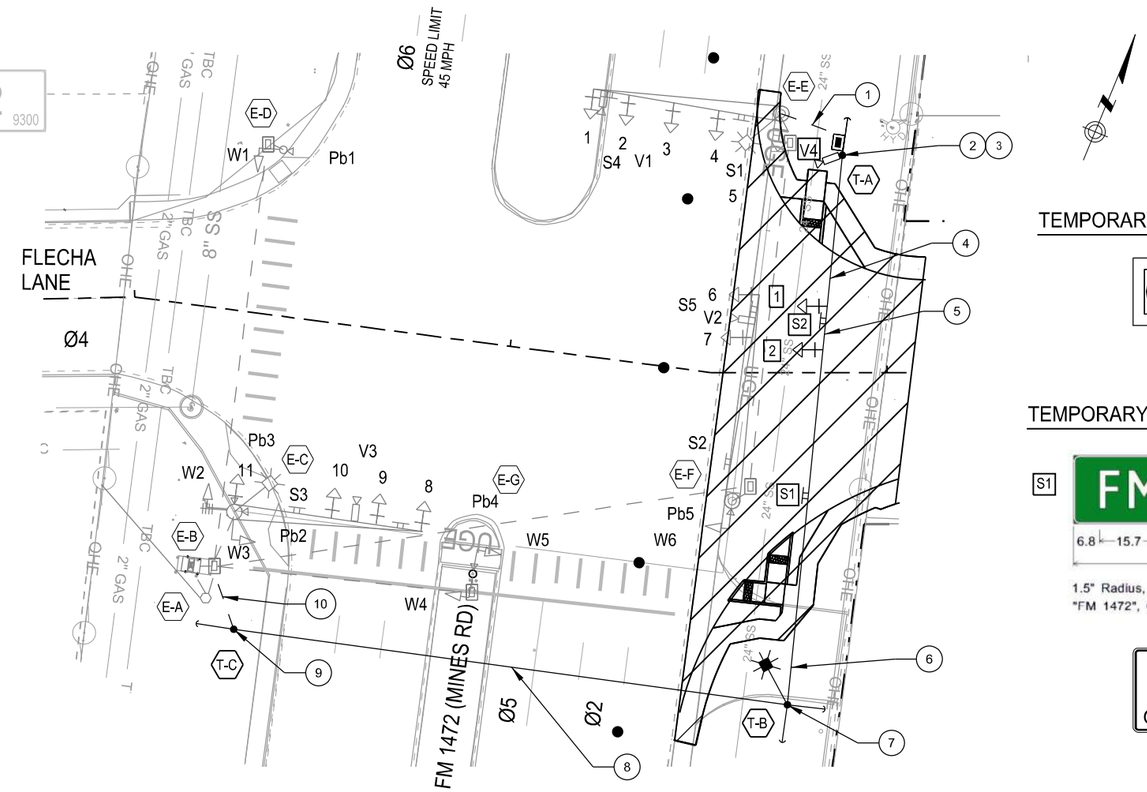

TEMPORARY SIGNAL HEAD LEGEND

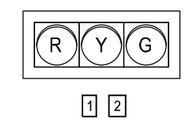

TEMPORARY SPAN WIRE SIGN LEGEND

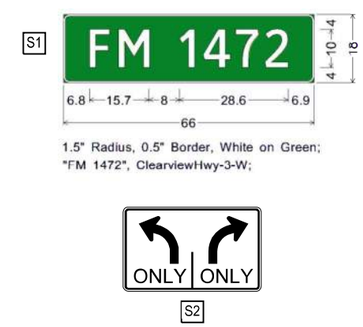

PROPOSED CONDUIT AND CONDUCTOR SCHEDULE

B = BORED T = TRENCHED OH = OVERHEAD TP = TIMBER POLE E = EXISTING	CONDUIT / SPAN RUN NUMBER		1		2		3	4	5	6	7	8	9		10	
	EXISTING CONDUIT															
	NUMBER OF 2" CONDUIT		1												1	
	NUMBER OF 4" CONDUIT			1												1
	NUMBER OF 2" RM CONDUIT				1		1				1		1			
	NUMBER OF 3" RM CONDUIT					1								2		
	SPAN WIRE							1	1							
	CONDUIT/ SPAN LENGTH (FT)		30	30	25	25	15	40	12	95	15	155	25	25	20	20
	RUN TYPE		T	T	TP	TP	TP	OH	OH	OH	TP	OH	TP	TP	T	T
CABLE	CIRCUIT															
#6-BARE	BARE BOND GROUND														1	2
9-CONDUCTOR #12 STRANDED TY A	VEHICLE SIGNALS	POLE E-E- PHASE ø2 & ø5		2		2		2	2	2		2		2		2
		ø4 VH - SPAN T-A TO T-B							1	1		1		1		1
VIDEO COM. CABLE (COAXIAL)	VIDEO DETECTION (VIVDS)	POLE E-E- PHASE ø2 & ø5		1		1		1	1	1		1		1		1
		ø4 VH - SPAN T-A TO T-B					1	1	1	1		1		1		1
4 COND #12 TRAY CABLE	LUMINAIRE	POLE E-E	1		1			1	1	1		1	1		1	
		POLE T-B									1	1	1		1	

GRAPHIC SCALE
(IN FEET)
20 10 0 20 40 60
1" = 40'

STATE OF TEXAS
MIFTAH SHEMSU SEMANE
123456
LICENSED PROFESSIONAL ENGINEER

MIFTAH SHEMSU SEMANE, P.E.
2/26/2025

LAS CRUCES REALIGNMENT

TEMPORARY SIGNAL LAYOUT
PHASE 1
FM 1472 AT LAS CRUCES DR/FLECHA LN

SHEET 1 OF 1

KCI TECHNOLOGIES, INC.
2806 W. BITTERS RD. - SUITE 218
SAN ANTONIO, TX 78248 - 210.641.9999
TEXAS REGISTERED ENGINEERING FIRM
TBPE FIRM No. F-10573
www.kci.com

Texas Department of Transportation

FED.RD. DIV.NO.	FEDERAL AID PROJECT NO.		SHEET NO.
6	DMO 2012 (628)		29
STATE	DIST.	COUNTY	
TEXAS	LRD	WEBB	
CONT.	SECT.	JOB	HIGHWAY NO.
0922	33	076	CS

PLOTTED ON: 2/24/2025 @ 5:29:54 PM DESIGN FILENAME: X:\data\txdot\Projects\359700_LasCruces_Flecha\WestLaredoCorridor\TCP\LasCruces_TEMP_SIG_P1.dgn

TEMPORARY TRAFFIC SIGNAL NOTES

GENERAL NOTES:

1. EXISTING SERVICE METER "E-A" AND CONTROLLER "E-B" ARE TO REMAIN FOR TEMPORARY SIGNAL.
2. CONTRACTOR SHALL CONNECT/SHIFT TEMPORARY TRAFFIC SIGNAL DURING OFF-PEAK HOURS. PROVIDE POLICE OFFICER AS NEEDED FOR TRAFFIC CONTROL

PHASE 2

1. TEMPORARY SIGNAL TO REMAIN AS SHOWN.
2. EXISTING SERVICE METER "E-A" AND CONTROLLER "E-B" ARE TO REMAIN FOR TEMPORARY SIGNAL.
3. EXISTING PEDESTAL POLE "E-G" IS TO REMAIN. PEDESTRIAN SIGNAL HEADS W4 & W5 AND PUSH BUTTON Pb4 ARE TO REMAIN BAGGED.
5. EXISTING MAST ARM POLES "E-C" IS TO REMAIN. ALL VEHICULAR SIGNAL HEADS, VIDEO DETECTION VIVDS, AND MAST ARMS SIGNS ARE TO REMAIN UNBAGGED AND OPERATIONAL. PED SIGNAL HEAD W2 AND PUSH BUTTON Pb2 ARE TO REMAIN UNBAGGED AND OPERATIONAL. PED SIGNAL HEAD W3 AND PUSH BUTTON Pb3 ARE TO REMAIN BAGGED.
6. EXISTING PEDESTAL POLE "E-D" IS TO REMAIN. PEDESTRIAN SIGNAL HEAD W1 AND PUSH BUTTON Pb1 ARE TO REMAIN UNBAGGED AND OPERATIONAL.
7. EXISTING MAST ARM POLES "E-E" IS TO REMAIN. ALL VEHICULAR SIGNAL HEADS, VIDEO DETECTION VIVDS, AND MAST ARMS SIGNS ARE TO REMAIN UNBAGGED AND OPERATIONAL.
8. 40' TIMBER POLES "T-A, T-B,& T-C" WITH SPAN WIRE AND 2 DOWN GUYS PER POLE ARE TO REMAIN AS SHOWN.
9. TEMPORARY VEHICLE SIGNAL HEADS 1 & 2 ARE TO REMAIN ON SPAN WIRE AS SHOWN. TEMPROARY VIDEO DETECTION V4 ON TEMPORARY POLE "T-A" IS TO REMAIN AS SHOWN. TEMPORARY LUMINAIRE ON TEMPORARY POLE "T-B" IS TO REMAIN AS SHOWN. SPAN WIRE SIGNS S1 & S2 ARE TO REMAIN AS SHOWN.
10. TEMPORARY CONDUIT AND SIGNAL WIRING ARE TO REMAIN AS SHOWN ON SIGNAL LAYOUT AND CONDUCTOR & CONDUIT SCHEDULE.
11. REMOVE TEMPORARY SIGNAL AT THE END OF PHASE 2, AND INSTALL PERMANENT SIGNAL BEFORE PHASE 3.

EXISTING SIGNAL LEGEND

- EXIST MAST ARM SIGNAL POLE
- EXIST PEDESTRIAN SIGNAL POLE
- EXIST SIGNAL HEAD W/ BACKPLATE
- EXIST PEDESTRIAN SIGNAL HEAD
- EXIST PEDESTRIAN PUSH BUTTON
- EXIST CONTROLLER CABINET
- EXIST ELECTRICAL SERVICE
- EXIST VIDEO DETECTION (VIVDS)
- EXIST MAST ARM SIGN
- EXIST LUMINAIRE
- EXIST UNI-DIRECTIONAL ANTENNA
- EXIST GROUND BOX
- EXIST CONDUIT
- EXIST OVERHEAD ELECTRIC
- EXIST RIGHT OF WAY
- E-A — EXIST CONTROLLER/ POLE IDENTIFIER

TEMPORARY SIGNAL LEGEND

- TEMP. 40' TIMBER POLE AND SPAN WIRE COMBINATION WITH 2 DOWN GUYS
- TEMP. SIGNAL HEAD W/BACKPLATE
- TEMP. VIDEO DETECTION (VIVDS)
- TEMP. SPAN WIRE SIGN
- TEMP. TY D GROUND BOX
- TEMP. LUMINAIRE
- TEMP. CONDUIT (TRENCH)
- T-A — TEMP. CONTROLLER/POLE IDENTIFIER
- 1 — TEMP. SIGNAL HEAD IDENTIFIER
- S1 — TEMP. SIGN IDENTIFIER
- (1) — TEMP. CABLE RUN IDENTIFIER

EXISTING MAST ARM SIGN LEGEND

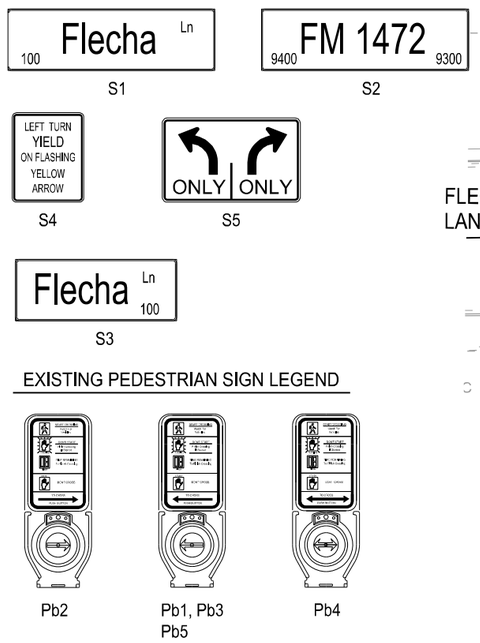

EXISTING PEDESTRIAN SIGN LEGEND

EXISTING SIGNAL HEAD LEGEND

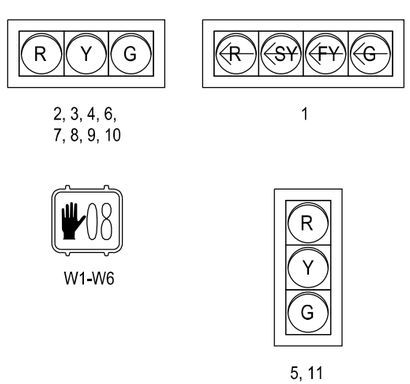

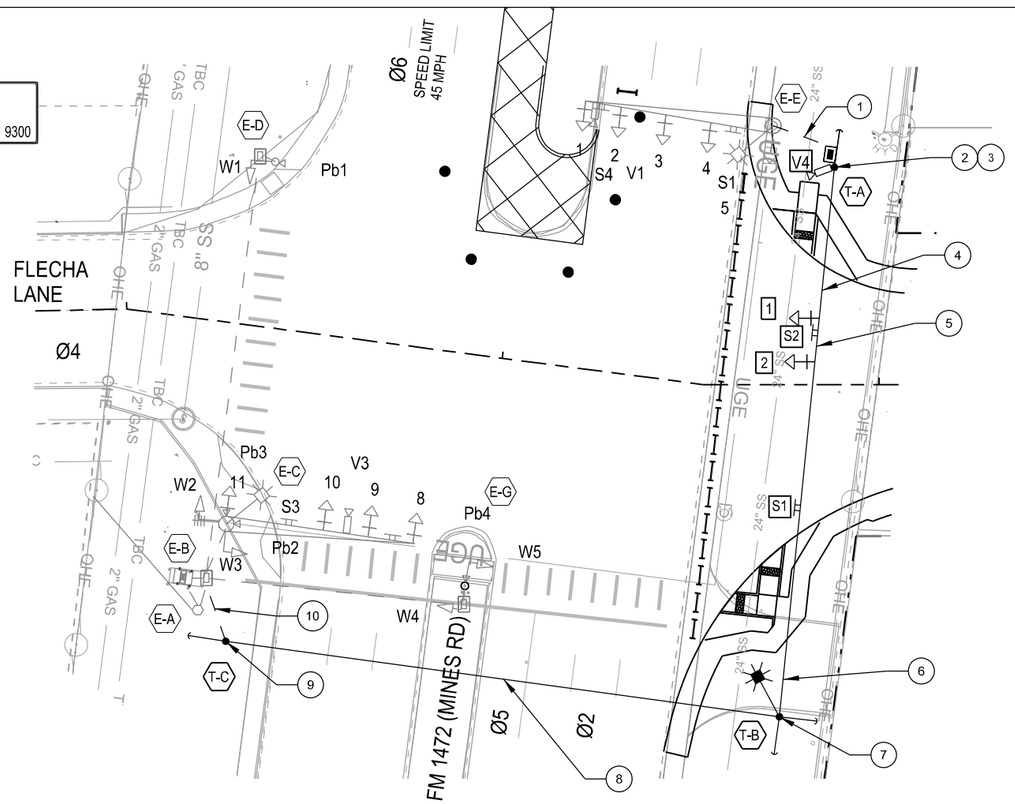

TEMPORARY SIGNAL HEAD LEGEND

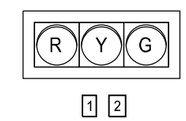

TEMPORARY SPAN WIRE SIGN LEGEND

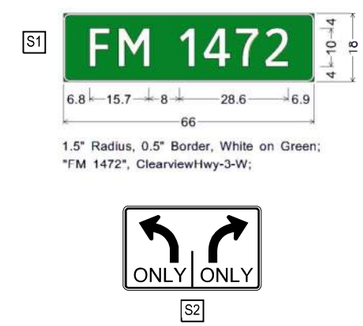

GRAPHIC SCALE
(IN FEET)
20 10 0 20 40 60
1" = 40'

STATE OF TEXAS
MIFTAH SHEMSU SEMANE
123456
LICENSED
PROFESSIONAL ENGINEER

MIFTAH SHEMSU SEMANE, P.E.
2/26/2025

LAS CRUCES REALIGNMENT

TEMPORARY SIGNAL LAYOUT
PHASE 2
FM 1472 AT LAS CRUCES DR/FLECHA LN

SHEET 1 OF 1

PROPOSED CONDUIT AND CONDUCTOR SCHEDULE

B = BORED T = TRENCHED OH = OVERHEAD TP = TIMBER POLE E = EXISTING	CONDUIT / SPAN RUN NUMBER		1		2		3	4	5	6	7	8	9		10	
	EXISTING CONDUIT															
	NUMBER OF 2" CONDUIT		1												1	
	NUMBER OF 4" CONDUIT			1												1
	NUMBER OF 2" RM CONDUIT				1		1				1		1			
	NUMBER OF 3" RM CONDUIT					1								2		
	SPAN WIRE							1	1							
	CONDUIT/ SPAN LENGTH (FT)		30	30	25	25	15	40	12	95	15	155	25	25	20	20
	RUN TYPE		T	T	TP	TP	TP	OH	OH	OH	TP	OH	TP	TP	T	T
CABLE	CIRCUIT															
#6-BARE	BARE BOND GROUND														1	2
9-CONDUCTOR #12 STRANDED TY A	VEHICLE SIGNALS	POLE E-E- PHASE ø2 & ø5		2		2		2	2	2		2		2		2
		ø4 VH - SPAN T-A TO T-B							1	1		1		1		1
VIDEO COM CABLE (COAXIAL)	VIDEO DETECTION (VIVDS)	POLE E-E- PHASE ø2 & ø5		1		1		1	1	1		1		1		1
		ø4 VH - SPAN T-A TO T-B					1	1	1	1		1		1		1
4 COND #12 TRAY CABLE	LUMINAIRE	POLE E-E	1		1			1	1	1		1	1		1	
		POLE T-B									1	1	1		1	

TEMPORARY SIGNAL	0681
	7001
	TEMP TRAF SIGNALS
UNIT	EA
TOTAL	1

KCI TECHNOLOGIES, INC.
2806 W. BITTERS RD. - SUITE 218
SAN ANTONIO, TX 78248 - 210.641.9999
TEXAS REGISTERED ENGINEERING FIRM
TBPE FIRM No. F-10573
www.kci.com

Texas Department of Transportation

FED.RD. DIV.NO.	FEDERAL AID PROJECT NO.		SHEET NO.
6	DMO 2012 (628)		30
STATE	DIST.	COUNTY	
TEXAS	LRD	WEBB	
CONT.	SECT.	JOB	HIGHWAY NO.
0922	33	076	CS

PLOTTED ON: 2/24/2025 @ 5:29:55 PM DESIGN FILENAME: X:\data\txdot\Projects\359700_LasCruces_FlechaWestLaredoCorridor\TCP\LasCruces_TEMP_SIG_P2.dgn

POLE & EQUIPMENT INFORMATION

- E-A EXISTING ELECTRICAL SERVICE TO REMAIN
- E-B EXISTING TRAFFIC SIGNAL CONTROLLER CABINET TO REMAIN
- E-C EXISTING SIGNAL MAST ARM POLE AND SIGNAL ATTACHMENTS TO BE REMOVED.
- E-D EXISTING 10' PED POLE WITH PROPOSED (1) LED COUNTDOWN PEDESTRIAN HEAD AND (1) AUDIBLE PEDESTRIAN PUSH BUTTON WITH R10-3e(L) SIGN.
- E-E EXISTING 30' LMA STEEL POLE WITH 50' MAST ARM, WITH PROPOSED (1) RADAR PRESENCE DETECTOR, (1) RADAR ADVANCE DETECTOR,(1) LUMINAIRE, (1) 4-SECTION HORIZONTAL (R-SY-FY-G), (2) 3-SECTION HORIZONTAL (R-Y-G), AND (1) 3-SECTION VERTICAL (R-Y-G).
- E-F EXISTING SIGNAL MAST ARM POLE AND SIGNAL ATTACHMENTS TO BE REMOVED.
- E-G EXISTING 10' PED POLE WITH PROPOSED (2) LED COUNTDOWN PEDESTRIAN HEAD AND (1) AUDIBLE PEDESTRIAN PUSH BUTTON WITH R10-3e(D) SIGN.
- P-A INSTALL 10' PED POLE ON A 5.7' DEEP 24-A FOUNDATION WITH (1) LED COUNTDOWN PEDESTRIAN HEAD AND (1) AUDIBLE PEDESTRIAN PUSH BUTTON WITH R10-3e(R) SIGN.
- P-B INSTALL 30' LMA STEEL POLE ON A 22' DEEP 48-A FOUNDATION WITH 60' MAST ARM, (1) RADAR PRESENCE DETECTOR, (1) LUMINAIRE, (1) 4-SECTION HORIZONTAL (R-SY-FY-G), AND (2) 3-SECTION HORIZONTAL (R-Y-G)
- P-C INSTALL 10' PED POLE ON A 5.7' DEEP 24-A FOUNDATION WITH (1) LED COUNTDOWN PEDESTRIAN HEAD AND (1) AUDIBLE PEDESTRIAN PUSH BUTTON WITH R10-3e(R) SIGN.
- P-D INSTALL 10' PED POLE ON A 5.7' DEEP 24-A FOUNDATION WITH (1) LED COUNTDOWN PEDESTRIAN HEAD AND (1) AUDIBLE PEDESTRIAN PUSH BUTTON WITH R10-3e(L) SIGN.
- P-E INSTALL 30' LMA STEEL POLE ON A 22' DEEP 48-A FOUNDATION WITH 65' MAST ARM, (1) RADAR PRESENCE DETECTOR, (1) LUMINAIRE, (1) 4-SECTION HORIZONTAL (R-SY-FY-G), (2) 3-SECTION HORIZONTAL (R-Y-G), (1) LED COUNTDOWN PEDESTRIAN HEAD AND (1) AUDIBLE PEDESTRIAN PUSH BUTTON WITH R10-3e(R) SIGN.
- P-F INSTALL 30' LMA STEEL POLE ON A 22' DEEP 48-A FOUNDATION WITH 60' MAST ARM, (1) RADAR PRESENCE DETECTOR, (1) CCTV CAMERA, (1) ITS 5 GHZ RADIO, (1) LUMINAIRE, (1) 4-SECTION HORIZONTAL (R-SY-FY-G), (2) 3-SECTION HORIZONTAL (R-Y-G),(1) 3-SECTION VERTICAL (R-Y-G), (1) LED COUNTDOWN PEDESTRIAN HEAD AND (1) AUDIBLE PEDESTRIAN PUSH BUTTON WITH R10-3e(L) SIGN.

TEMPORARY TRAFFIC SIGNAL NOTES

GENERAL NOTES:

1. CONTRACTOR SHALL CONNECT/SHIFT PERMANENT TRAFFIC SIGNAL DURING OFF-PEAK HOURS. PROVIDE POLICE OFFICER AS NEEDED FOR TRAFFIC CONTROL.

PHASE 3

1. REMOVE TEMPORARY SIGNAL AT THE END OF PHASE 2, AND INSTALL PERMANENT SIGNAL BEFORE PHASE 3.
2. AS SHOWN ON THIS LAYOUT AND ON THE PROPOSED TRAFFIC SIGNAL LAYOUT, ALL SIGNAL POLES WITH VEHICULAR SIGNAL HEADS, PEDESTRIAN SIGNAL HEADS, PUSH BUTTONS, RADAR PRESENCE DETECTION, RADAR ADVANCE DETECTION, AND MAST ARM SIGNS ARE TO REMAIN UNBAGGED AND OPERATIONAL WITH THE EXCEPTION OF VEHICULAR SIGNAL HEAD "9" AND MAST ARM SIGN "S7" WHICH ARE TO BE BAGGED FOR SOUTHBOUND LEFT TURN CLOSURE DURING PHASE 3.
3. AT THE END OF PHASE 3, VEHICULAR SIGNAL HEAD "9" AND MAST ARM SIGN "S7" ARE TO BE UNBAGGED.

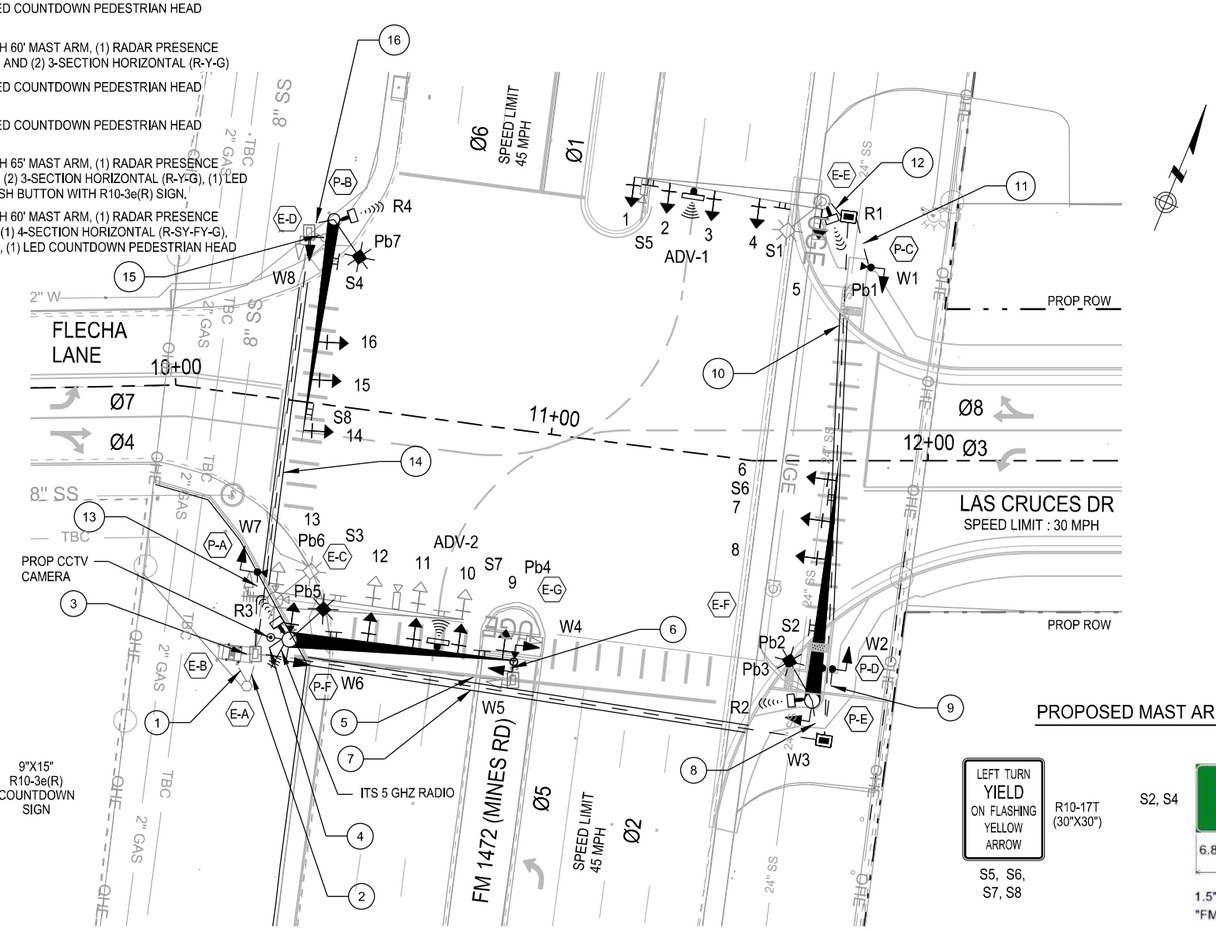

EXISTING SIGNAL LEGEND

- EXIST MAST ARM SIGNAL POLE
- EXIST PEDESTRIAN SIGNAL POLE
- EXIST CONTROLLER CABINET
- EXIST ELECTRICAL SERVICE
- EXIST LUMINAIRE
- EXIST GROUND BOX
- EXIST CONDUIT
- EXIST OVERHEAD ELECTRIC
- EXIST RIGHT OF WAY
- E-A EXIST CONTROLLER/ POLE IDENTIFIER

PROPOSED SIGNAL LEGEND

- PROP MAST ARM SIGNAL POLE
- PROP PEDESTRIAN SIGNAL POLE
- PROP CONTROLLER CABINET
- PROP SIGNAL HEAD W/ BACKPLATE
- PROP CCTV CAMERA
- R1 PROP RADAR PRESENCE DETECTOR
- ADV-1 PROP RADAR ADVANCE DETECTOR
- PROP PEDESTRIAN SIGNAL HEAD
- PROP PEDESTRIAN PUSH BUTTON
- PROP MAST ARM SIGN
- PROP LUMINAIRE
- PROP TY D GROUND BOX
- PROP CONDUIT (TRENCH)
- PROP CONDUIT (BORE)
- A PROP CONTROLLER/POLE IDENTIFIER
- 1 PROP CABLE RUN IDENTIFIER
- 1 PROP SIGNAL HEAD IDENTIFIER
- S1 PROP SIGN IDENTIFIER
- PROP RIGHT OF WAY
- DIRECTION OF TRAFFIC FLOW

PROPOSED PEDESTRIAN SIGN LEGEND

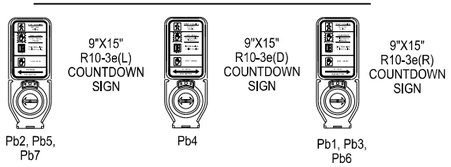

PROPOSED MAST ARM SIGN LEGEND

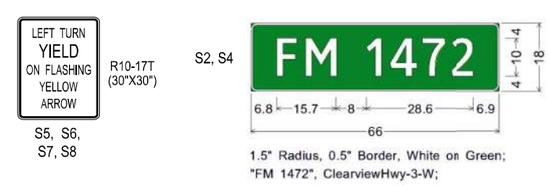

PROPOSED SIGNAL HEAD LEGEND

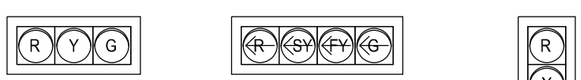

PROPOSED 3-SECTION 12" LENS HORIZONTAL SIGNAL HEADS W/2" YELLOW REFLECTIVE BORDER SIGNAL HEADS: 2, 3, 4, 7, 8, 10, 11, 12, 15, 16

PROPOSED 4-SECTION 12" LENS HORIZONTAL SIGNAL HEADS W/2" YELLOW REFLECTIVE BORDER SIGNAL HEADS: 1, 6, 9, 14

PROPOSED 3-SECTION 12" LENS VERTICAL SIGNAL HEADS W/2" YELLOW REFLECTIVE BORDER SIGNAL HEADS: 5, 13

LED COUNTDOWN PEDESTRIAN SIGNAL W1-W8

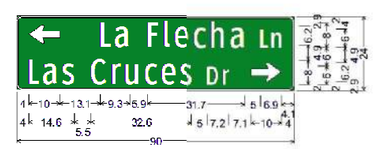

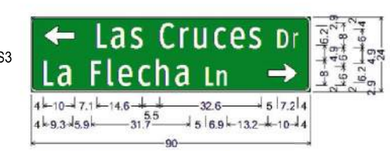

GRAPHIC SCALE
(IN FEET)
20 10 0 20 40 60
1" = 40'

STATE OF TEXAS
MIFTAH SHEMSU SEMANE
123456
LICENSED
PROFESSIONAL ENGINEER

MIFTAH SHEMSU SEMANE, P.E.
2/26/2025

LAS CRUCES REALIGNMENT

TEMPORARY SIGNAL LAYOUT
PHASE 3
FM 1472 AT LAS CRUCES DR/FLECHA LN

SHEET 1 OF 1

KCI TECHNOLOGIES, INC.
2806 W. BITTERS RD. - SUITE 218
SAN ANTONIO, TX 78248 - 210.641.9999
TEXAS REGISTERED ENGINEERING FIRM
TBPE FIRM No. F-10573
www.kci.com

Texas Department of Transportation

FED.RD. DIV.NO.	FEDERAL AID PROJECT NO.		SHEET NO.
6	DMO 2012 (628)		31
STATE	DIST.	COUNTY	
TEXAS	LRD	WEBB	
CONT.	SECT.	JOB	HIGHWAY NO.
0922	33	076	CS

PLOTTED ON: 2/24/2025 @ 5:29:56 PM DESIGN FILENAME: X:\data\txdot\Projects\359700_LasCruces_Flecha\WestLaredoCorridor\TCP\LasCruces_TEMP_SIG_P3.dgn

STORMWATER POLLUTION PREVENTION PLAN (SWP3):

This SWP3 has been developed in accordance with the TPDES Construction General Permit TXR150000 (CGP). The Texas Department of Transportation (TxDOT) ensures that project specifications include adequate best management practices (BMPs) for this project.

For all projects with soil disturbing activity and for projects that have Environmental, Permits, Issues, and Commitments (EPICs) dependent on stormwater controls and water quality measures TxDOT will maintain a SWP3 with all pertinent records, correspondence, environmental documents, etc. at the project field office, Area Office, or electronically.

This SWP3 is consistent with requirements specified in applicable stormwater plans and the projects environmental permits, issues, and commitments (EPICs). A copy of the CGP is included in Attachment 2.12 of the SWP3 binder.

1.0 SITE/PROJECT DESCRIPTION

1.1 PROJECT CONTROL SECTION JOB (CSJ):
0922 - 33 - 076

1.2 PROJECT LIMITS:

From: STA 11+54.73

To: STA 20+71.00

1.3 PROJECT COORDINATES:

BEGIN: (Lat) N 27 34.9' ,(Long) W 99 35.5'

END: (Lat) N 27 35.1' ,(Long) W 99 30.4'

1.4 TOTAL PROJECT AREA (Acres): _____

1.5 TOTAL AREA TO BE DISTURBED (Acres): 3.01 AC

1.6 NATURE OF CONSTRUCTION ACTIVITY:
REALIGNMENT OF FLECHA LN/LAS CRUCES ALONG FM 1472. GRADING, BASE, STRUCTURE, SURFACE PAVEMENT MARKINGS, ETC.

1.7 MAJOR SOIL TYPES:

Soil Type	Description
CLAY	VERY SOFT TO SOFT, BROWN, SANDY LEAN (CL).
SAND	LOOSE TO DENSE, YELLOWISH, BROWN, CLAYEY (SC).

1.8 PROJECT SPECIFIC LOCATIONS (PSLs):

PSLs must be depicted on the Environmental Layout Sheets in Attachment 1.2 of this SWP3. PSLs may be identified during preconstruction meetings or during the construction process. Please choose from the options below:

- X PSLs determined during preconstruction meeting
- ☐ PSLs determined during construction
- ☐ No PSLs planned for construction

Type	Sheet #s

All off-ROW PSLs required by the Contractor are the Contractor's responsibility. The Contractor shall secure all permits required by local, state, federal laws for off-ROW PSLs. The contractor shall provide diagrams, areas of disturbance, acreage, and BMPs for all off-ROW PSLs within one mile of the project.

1.9 CONSTRUCTION ACTIVITIES:
(Use the following list as a starting point when developing the Construction Activity Schedule and Ceasing Record in Attachment 2.5.)

- X Mobilization
- X Install sediment and erosion controls
- X Blade existing topsoil into windrows, prep ROW, clear and grub
- X Remove existing pavement
- X Grading operations, excavation, and embankment
- X Excavate and prepare subgrade for proposed pavement widening
- ☐ Remove existing culverts, safety end treatments (SETs)
- ☐ Remove existing metal beam guard fence (MBGF), bridge rail
- X Install proposed pavement per plans
- X Install culverts, culvert extensions, SETs
- X Install mow strip, MBGF, bridge rail
- X Place flex base
- X Rework slopes, grade ditches
- X Blade windrowed material back across slopes
- X Revegetation of unpaved areas
- X Achieve site stabilization and remove sediment and erosion control measures
- X Other: DRAINAGE EASEMENT STABILIZATION
- ☐ Other: _____
- ☐ Other: _____

1.10 POTENTIAL POLLUTANTS AND SOURCES:

- X Sediment laden stormwater from stormwater conveyance over disturbed area
- X Fuels, oils, and lubricants from construction vehicles, equipment, and storage
- X Solvents, paints, adhesives, etc. from various construction activities
- X Transported soils from offsite vehicle tracking
- X Construction debris and waste from various construction activities
- X Contaminated water from excavation or dewatering pump-out water
- X Sanitary waste from onsite restroom facilities
- X Trash from various construction activities/receptacles
- X Long-term stockpiles of material and waste
- X Discharges from concrete washout activities, runoff from concrete cutting activities, and other concrete related activities.
- ☐ Other: _____
- ☐ Other: _____
- ☐ Other: _____

1.11 RECEIVING WATERS:

Receiving waters must be depicted on the Environmental Layout Sheets in Attachment 1.2 of this SWP3. Include Segment # for receiving waters.

Tributaries	Classified Waterbody
MANADAS TRIBUTARY 2	MANADAS CREEK

* Add (*) for impaired waterbodies with pollutant in ().

1.12 ROLES AND RESPONSIBILITIES: TxDOT

- X Development of plans and specifications
- X Submit Notice of Intent (NOI) to TCEQ (≥5 acres)
- X Post Construction Site Notice
- X Submit NOI/CSN to local MS4
- X Perform SWP3 inspections
- X Maintain SWP3 records and update to reflect daily operations
- X Complete and submit Notice of Termination to TCEQ
- X Maintain SWP3 records for 3 years
- ☐ Other: _____
- ☐ Other: _____
- ☐ Other: _____

1.13 ROLES AND RESPONSIBILITIES: CONTRACTOR

- X Day To Day Operational Control
- X Submit Notice of Intent (NOI) to TCEQ (≥5 acres)
- X Post Construction Site Notice
- X Submit NOI/CSN to local MS4
- X Maintain schedule of major construction activities
- X Install, maintain and modify BMPs
- X Complete and submit Notice of Termination to TCEQ
- X Maintain SWP3 records for 3 years
- ☐ Other: _____
- ☐ Other: _____
- ☐ Other: _____

1.14 LOCAL MUNICIPAL SEPARATE STORM SEWER SYSTEM (MS4) OPERATOR COORDINATION:

MS4 Entity

STORMWATER POLLUTION PREVENTION PLAN (SWP3)

© 2023

July 2023 Sheet 1 of 2

Texas Department of Transportation

FED. RD. DIV. NO.	PROJECT NO.		SHEET NO.
6	DMO 2012 (628)		32
STATE	STATE DIST.	COUNTY	
TEXAS	LRD	WEBB	
CONT.	SECT.	JOB	HIGHWAY NO.
0922	33	076	CS

STORMWATER POLLUTION PREVENTION PLAN (SWP3):

2.0 BEST MANAGEMENT PRACTICES (BMPs) AND CONTROLS, INSPECTION, AND MAINTENANCE

The Contractor shall be the responsible party for implementing the BMPs described herein and for complying with the SWP3 for control of erosion and sedimentation during day-to-day operations. The Contractor shall implement changes to this SWP3 approved by TxDOT within the times specified in this SWP3 or the CGP.

2.1 EROSION CONTROL AND SOIL STABILIZATION BMPs:

T / P

- ☒ ☐ Protection of Existing Vegetation
- ☐ ☐ Vegetated Buffer Zones
- ☒ ☐ Soil Retention Blankets
- ☐ ☐ Geotextiles
- ☐ ☐ Mulching/ Hydromulching
- ☐ ☐ Soil Surface Treatments
- ☐ ☐ Temporary Seeding
- ☐ ☒ Permanent Planting, Sodding or Seeding
- ☒ ☐ Biodegradable Erosion Control Logs
- ☐ ☐ Rock Filter Dams/ Rock Check Dams
- ☐ ☐ Vertical Tracking
- ☐ ☐ Interceptor Swale
- ☐ ☒ Riprap
- ☐ ☐ Diversion Dike
- ☐ ☐ Temporary Pipe Slope Drain
- ☐ ☒ Embankment for Erosion Control
- ☐ ☒ Paved Flumes
- ☐ ☐ Other: _____
- ☐ ☐ Other: _____
- ☐ ☐ Other: _____
- ☐ ☐ Other: _____

2.2 SEDIMENT CONTROL BMPs:

T / P

- ☒ ☐ Biodegradable Erosion Control Logs
- ☒ ☐ Dewatering Controls
- ☒ ☐ Inlet Protection
- ☒ ☐ Rock Filter Dams/ Rock Check Dams
- ☐ ☐ Sandbag Berms
- ☒ ☐ Sediment Control Fence
- ☒ ☐ Stabilized Construction Exit
- ☐ ☐ Floating Turbidity Barrier
- ☐ ☐ Vegetated Buffer Zones
- ☐ ☐ Vegetated Filter Strips
- ☐ ☐ Other: _____
- ☐ ☐ Other: _____
- ☐ ☐ Other: _____
- ☐ ☐ Other: _____

Refer to the Environmental Layout Sheets/ SWP3 Layout Sheets located in Attachment 1.2 of this SWP3

Sediment control BMPs requiring design capacity calculations (See SWP3 Attachment 1.3.):

T / P

- ☐ ☐ Sediment Trap
  - ☐ Calculated volume runoff from 2-year, 24-hour storm for each acre of disturbed area
  - ☐ 3,600 cubic feet of storage per acre drained
- ☐ ☐ Sedimentation Basin
  - ☐ Not required (<10 acres disturbed)
  - ☐ Required (>10 acres) and implemented.
    - ☐ Calculated volume runoff from 2-year, 24-hour storm for each acre of disturbed area
    - ☐ 3,600 cubic feet of storage per acre drained
  - ☐ Required (>10 acres), but not feasible due to:
    - ☐ Available area/Site geometry
    - ☐ Site slope/Drainage patterns
    - ☐ Site soils/Geotechnical factors
    - ☐ Public safety
    - ☐ Other: _____

2.3 PERMANENT CONTROLS:

(Coordinate post-construction BMPs with appropriate TxDOT maintenance sections.)

BMPs To Be Left In Place Post Construction:

Type	Stationing	
	From	To

Refer to the Environmental Layout Sheets/ SWP3 Layout Sheets located in Attachment 1.2 of this SWP3

2.4 OFFSITE VEHICLE TRACKING CONTROLS:

- ☒ Excess dirt/mud on road removed daily
- ☒ Haul roads dampened for dust control
- ☒ Loaded haul trucks to be covered with tarpaulin
- ☒ Stabilized construction exit
- ☒ Daily street sweeping
- ☐ Other: _____
- ☐ Other: _____
- ☐ Other: _____
- ☐ Other: _____

2.5 POLLUTION PREVENTION MEASURES:

- ☒ Chemical Management
- ☒ Concrete and Materials Waste Management
- ☒ Debris and Trash Management
- ☒ Dust Control
- ☒ Sanitary Facilities
- ☐ Other: _____
- ☐ Other: _____
- ☐ Other: _____
- ☐ Other: _____

2.6 VEGETATED BUFFER ZONES:

Natural vegetated buffers shall be maintained as feasible to protect adjacent surface waters. If vegetated natural buffer zones are not feasible due to site geometry, the appropriate additional sediment control measures have been incorporated into this SWP3.

Type	Stationing	
	From	To

Refer to the Environmental Layout Sheets/ SWP3 Layout Sheets located in Attachment 1.2 of this SWP3

2.7 ALLOWABLE NON-STORMWATER DISCHARGES:

- ☒ Fire hydrant flushings
- ☒ Irrigation drainage
- ☒ Pavement washwater (where spills or leaks have not occurred, and detergents are not used)
- ☒ Potable water sources
- ☒ Springs
- ☒ Uncontaminated groundwater
- ☒ Water used to wash vehicles or control dust
- ☒ Other allowable non-stormwater discharges as allowed by TPDES GP TXR150000.

2.8 DEWATERING:

Dewatering discharges of accumulated stormwater, groundwater, and surface water including discharges from dewatering of trenches, excavations, foundations, vaults, and other points of accumulation are prohibited unless managed by appropriate controls to prevent and minimize the offsite discharge of sediment and other pollutants.

2.9 INSPECTIONS:

All disturbed areas and erosion and sediment control devices shall be inspected at least once every seven (7) days. Inspections shall be performed by TxDOT as indicated on the Field Inspection and Maintenance Report Form 2118 and retained in Attachment 2.5 of this SWP3.

When dewatering activities are present, a daily inspection will be conducted once per day during those activities and documented in accordance with CGP and TxDOT requirements.

2.10 MAINTENANCE:

Control measures shall be properly installed according to specifications. If it is determined that a BMP or control measure is not operating effectively, maintenance must be accomplished as soon as possible and before the next anticipated rain event, but in no case later than 7 calendar days after being able to access the site. Maintenance shall be performed by the Contractor as indicated on the Field Inspection and Maintenance Report Form 2118 and retained in Attachment 2.5 of this SWP3.

STORMWATER POLLUTION PREVENTION PLAN (SWP3)

© 2023

July 2023 Sheet 2 of 2

Texas Department of Transportation

FED. RD. DIV. NO.	PROJECT NO.		SHEET NO.
6	DMO 2012 (628)		33
STATE	STATE DIST.	COUNTY	
TEXAS	LRD	WEBB	
CONT.	SECT.	JOB	HIGHWAY NO.
0922	33	076	CS

DISCLAIMER:
The use of this standard is governed by the "Texas Engineering Practice Act". No warranty of any kind is made by TxDOT for any purpose whatsoever. TxDOT assumes no responsibility for the conversion of this standard to other formats or for incorrect results or damages resulting from its use.

DATE:
FILE:

I. STORMWATER POLLUTION PREVENTION-CLEAN WATER ACT SECTION 402

TPDES TXR 150000: Stormwater Discharge Permit or Construction General Permit required for projects with 1 or more acres disturbed soil. Projects with any disturbed soil must protect for erosion and sedimentation in accordance with Item 506.

List MS4 Operator(s) that may receive discharges from this project. They may need to be notified prior to construction activities.

1.

2.

☐ No Action Required ☒ Required Action

Action No.

1. Prevent stormwater pollution by controlling erosion and sedimentation in accordance with TPDES Permit TXR 150000
2. Comply with the SW3P and revise when necessary to control pollution or required by the Engineer.
3. Post Construction Site Notice (CSN) with SW3P information on or near the site, accessible to the public and TCEQ, EPA or other inspectors.
4. When Contractor project specific locations (PSL's) increase disturbed soil area to 5 acres or more, submit NOI to TCEQ and the Engineer.

II. WORK IN OR NEAR STREAMS, WATERBODIES AND WETLANDS CLEAN WATER ACT SECTIONS 401 AND 404

USACE Permit required for filling, dredging, excavating or other work in any water bodies, rivers, creeks, streams, wetlands or wet areas.

The Contractor must adhere to all of the terms and conditions associated with the following permit(s):

☐ No Permit Required

☐ Nationwide Permit 14 - PCN not Required (less than 1/10th acre waters or wetlands affected)

☒ Nationwide Permit 14 - PCN Required (1/10 to <1/2 acre, 1/3 in tidal waters)

☐ Individual 404 Permit Required

☐ Other Nationwide Permit Required: NWP# _____

Required Actions: List waters of the US permit applies to, location in project and check Best Management Practices planned to control erosion, sedimentation and post-project TSS.

1.

2.

3.

4.

The elevation of the ordinary high water marks of any areas requiring work to be performed in the waters of the US requiring the use of a nationwide permit can be found on the Bridge Layouts.

Best Management Practices:

Erosion	Sedimentation	Post-Construction TSS
☒ Temporary Vegetation	☒ Silt Fence	☒ Vegetative Filter Strips
☒ Blankets/Matting	☒ Rock Berm	☐ Retention/Irrigation Systems
☐ Mulch	☐ Triangular Filter Dike	☐ Extended Detention Basin
☐ Sodding	☐ Sand Bag Berm	☐ Constructed Wetlands
☐ Interceptor Swale	☐ Straw Bale Dike	☐ Wet Basin
☐ Diversion Dike	☐ Brush Berms	☐ Erosion Control Compost
☐ Erosion Control Compost	☐ Erosion Control Compost	☐ Mulch Filter Berm and Socks
☐ Mulch Filter Berm and Socks	☐ Mulch Filter Berm and Socks	☐ Compost Filter Berm and Socks
☐ Compost Filter Berm and Socks	☐ Compost Filter Berm and Socks	☐ Vegetation Lined Ditches
	☐ Stone Outlet Sediment Traps	☐ Sand Filter Systems
	☐ Sediment Basins	☐ Grassy Swales

III. CULTURAL RESOURCES

Refer to TxDOT Standard Specifications in the event historical issues or archeological artifacts are found during construction. Upon discovery of archeological artifacts (bones, burnt rock, flint, pottery, etc.) cease work in the immediate area and contact the Engineer immediately.

☒ No Action Required ☐ Required Action

Action No.

1.

2.

3.

4.

IV. VEGETATION RESOURCES

Preserve native vegetation to the extent practical.
Contractor must adhere to Construction Specification Requirements Specs 162, 164, 192, 193, 506, 730, 751, 752 in order to comply with requirements for invasive species, beneficial landscaping, and tree/brush removal commitments.

☒ No Action Required ☐ Required Action

Action No.

1.

2.

3.

4.

V. FEDERAL LISTED, PROPOSED THREATENED, ENDANGERED SPECIES, CRITICAL HABITAT, STATE LISTED SPECIES, CANDIDATE SPECIES AND MIGRATORY BIRDS.

☐ No Action Required ☐ Required Action

Action No.

1.

2.

3.

4.

If any of the listed species are observed, cease work in the immediate area, do not disturb species or habitat and contact the Engineer immediately. The work may not remove active nests from bridges and other structures during nesting season of the birds associated with the nests. If caves or sinkholes are discovered, cease work in the immediate area, and contact the Engineer immediately.

LIST OF ABBREVIATIONS

BMP:	Best Management Practice	SPCC:	Spill Prevention Control and Countermeasure
CGP:	Construction General Permit	SW3P:	Storm Water Pollution Prevention Plan
DSHS:	Texas Department of State Health Services	PCN:	Pre-Construction Notification
FHWA:	Federal Highway Administration	PSL:	Project Specific Location
MOA:	Memorandum of Agreement	TCEQ:	Texas Commission on Environmental Quality
MOU:	Memorandum of Understanding	TPDES:	Texas Pollutant Discharge Elimination System
MS4:	Municipal Separate Stormwater Sewer System	TPWD:	Texas Parks and Wildlife Department
MBTA:	Migratory Bird Treaty Act	TxDOT:	Texas Department of Transportation
NOT:	Notice of Termination	T&E:	Threatened and Endangered Species
NWP:	Nationwide Permit	USACE:	U.S. Army Corps of Engineers
NOI:	Notice of Intent	USFWS:	U.S. Fish and Wildlife Service

VI. HAZARDOUS MATERIALS OR CONTAMINATION ISSUES

General (applies to all projects):

Comply with the Hazard Communication Act (the Act) for personnel who will be working with hazardous materials by conducting safety meetings prior to beginning construction and making workers aware of potential hazards in the workplace. Ensure that all workers are provided with personal protective equipment appropriate for any hazardous materials used.

Obtain and keep on-site Material Safety Data Sheets (MSDS) for all hazardous products used on the project, which may include, but are not limited to the following categories: Paints, acids, solvents, asphalt products, chemical additives, fuels and concrete curing compounds or additives. Provide protected storage, off bare ground and covered, for products which may be hazardous. Maintain product labelling as required by the Act.

Maintain an adequate supply of on-site spill response materials, as indicated in the MSDS. In the event of a spill, take actions to mitigate the spill as indicated in the MSDS, in accordance with safe work practices, and contact the District Spill Coordinator immediately. The Contractor shall be responsible for the proper containment and cleanup of all product spills.

Contact the Engineer if any of the following are detected:

* Dead or distressed vegetation (not identified as normal)
* Trash piles, drums, canister, barrels, etc.
* Undesirable smells or odors
* Evidence of leaching or seepage of substances

Does the project involve any bridge class structure rehabilitation or replacements (bridge class structures not including box culverts)?

☐ Yes ☒ No

If "No", then no further action is required.
If "Yes", then TxDOT is responsible for completing asbestos assessment/inspection.

Are the results of the asbestos inspection positive (is asbestos present)?

☐ Yes ☒ No

If "Yes", then TxDOT must retain a DSHS licensed asbestos consultant to assist with the notification, develop abatement/mitigation procedures, and perform management activities as necessary. The notification form to DSHS must be postmarked at least 15 working days prior to scheduled demolition.

If "No", then TxDOT is still required to notify DSHS 15 working days prior to any scheduled demolition.

In either case, the Contractor is responsible for providing the date(s) for abatement activities and/or demolition with careful coordination between the Engineer and asbestos consultant in order to minimize construction delays and subsequent claims.

Any other evidence indicating possible hazardous materials or contamination discovered on site. Hazardous Materials or Contamination Issues Specific to this Project:

☐ No Action Required ☐ Required Action

Action No.

1.

2.

3.

VII. OTHER ENVIRONMENTAL ISSUES

(includes regional issues such as Edwards Aquifer District, etc.)

☐ No Action Required ☒ Required Action

Action No.

1. Noise: Contractor Shall ,make every reasonable effort to minimize construction noise through abatement measure such as work hour controls and proper maintenances of mufflers.
2. Air: Common dust control techniques such as surface chemical treatment or watering of unpaved road surface & vehicle speed reduction shall be implemented to minimize and prevent airborne dust during construction.
3.

Texas Department of Transportation — Design Division Standard

ENVIRONMENTAL PERMITS, ISSUES AND COMMITMENTS

EPIC

FILE: epic.dgn	DN: TxDOT	CK: RG	DW: VP	CK: AR
© TxDOT: February 2015	CONT	SECT	JOB	HIGHWAY
REVISIONS 12-12-2011 (DS) 05-07-14 ADDED NOTE SECTION IV. 01-23-2015 SECTION I (CHANGED ITEM 1122 TO ITEM 506, ADDED GRASSY SWALES.	0922	33	076	CS
	DIST	COUNTY		SHEET NO.
	LRD	WEBB		34

DISCLAIMER:
The use of this standard is governed by the "Texas Engineering Practice Act". No warranty of any kind is made by TxDOT for any purpose whatsoever. TxDOT assumes no responsibility for the conversion of this standard to other formats or for incorrect results or damages resulting from its use.

BARRICADE AND CONSTRUCTION (BC) STANDARD SHEETS GENERAL NOTES:

1. The Barricade and Construction Standard Sheets (BC sheets) are intended to show typical examples for placement of temporary traffic control devices, construction pavement markings, and typical work zone signs. The information contained in these sheets meet or exceed the requirements shown in the "Texas Manual on Uniform Traffic Control Devices" (TMUTCD).

2. The development and design of the Traffic Control Plan (TCP)is the responsibility of the Engineer.

3. The Contractor may propose changes to the TCP that are signed and sealed by a licensed professional engineer for approval. The Engineer may develop, sign and seal Contractor proposed changes.

4. The Contractor is responsible for installing and maintaining the traffic control devices as shown in the plans. The Contractor may not move or change the approximate location of any device without the approval of the Engineer.

5. Geometric design of lane shifts and detours should, when possible, meet the applicable design criteria contained in manuals such as the American Association of State Highway and Transportation Officials (AASHTO), "A Policy on Geometric Design of Highways and Streets," the TxDOT "Roadway Design Manual" or engineering judgment.

6. When projects abut, the Engineer(s) may omit the END ROAD WORK, TRAFFIC FINES DOUBLE, and other advance warning signs if the signing would be redundant and the work areas appear continuous to the motorists. If the adjacent project is completed first, the Contractor shall erect the necessary warning signs as shown on these sheets, the TCP sheets or as directed by the Engineer. The BEGIN ROAD WORK NEXT X MILES sign shall be revised to show appropriate work zone distance.

7. The Engineer may require duplicate warning signs on the median side of divided highways where median width will permit and traffic volumes justify the signing.

8. All signs shall be constructed in accordance with the details found in the "Standard Highway Sign Designs for Texas," latest edition. Sign details not shown in this manual shall be shown in the plans or the Engineer shall provide a detail to the Contractor before the sign is manufactured.

9. The temporary traffic control devices shown in the illustrations of the BC sheets are examples. As necessary, the Engineer will determine the most appropriate traffic control devices to be used.

10. Where highway construction or maintenance work is being undertaken, other than mobile operations as defined by the Texas Manual on Uniform Traffic Control Devices, CSJ limit signs are required. CSJ limit signs are shown on BC(2). The OBEY WARNING SIGNS STATE LAW sign, STAY ALERT TALK OR TEXT LATER and the WORK ZONE TRAFFIC FINES DOUBLE sign with plaque shall be erected in advance of the CSJ limits. The BEGIN ROAD WORK NEXT X MILES, CONTRACTOR and END ROAD WORK signs shall be erected at or near the CSJ limits. For mobile operations, CSJ limit signs are not required.

11. Traffic control devices should be in place only while work is actually in progress or a definite need exists.

12. The Engineer has the final decision on the location of all traffic control devices.

13. Inactive equipment and work vehicles, including workers' private vehicles must be parked away from travel lanes. They should be as close to the right-of-way line as possible, or located behind a barrier or guardrail, or as approved by the Engineer.

WORKER SAFETY NOTES:

1. Workers on foot who are exposed to traffic or to construction equipment within the right-of-way shall wear high-visibility safety apparel meeting the requirements of ISEA "American National Standard for High-Visibility Apparel," or equivalent revisions, and labeled as ANSI 107-2004 standard performance for Class 2 or 3 risk exposure. Class 3 garments should be considered for high traffic volume work areas or night time work.

2. Except in emergency situations, flagger stations shall be illuminated when flagging is used at night.

COMPLIANT WORKZONE TRAFFIC CONTROL DEVICES

1. Only pre-qualified products shall be used. The "Compliant Work Zone Traffic Control Devices List" (CWZTCD) describes pre-qualified products and their sources.

2. Work zone traffic control devices shall be compliant with the Manual for Assessing safety Hardware (MASH).

THE DOCUMENTS BELOW CAN BE FOUND ON-LINE AT http://www.txdot.gov
COMPLIANT WORK ZONE TRAFFIC CONTROL DEVICES LIST (CWZTCD)
DEPARTMENTAL MATERIAL SPECIFICATIONS (DMS)
MATERIAL PRODUCER LIST (MPL)
ROADWAY DESIGN MANUAL - SEE "MANUALS (ONLINE MANUALS)"
STANDARD HIGHWAY SIGN DESIGNS FOR TEXAS (SHSD)
TEXAS MANUAL ON UNIFORM TRAFFIC CONTROL DEVICES (TMUTCD)
TRAFFIC ENGINEERING STANDARD SHEETS

Texas Department of Transportation — Traffic Safety Division Standard

BARRICADE AND CONSTRUCTION GENERAL NOTES AND REQUIREMENTS

BC(1)-21

FILE: bc-21.dgn	DN: TxDOT	CK: TxDOT	DW: TxDOT	CK: TxDOT
© TxDOT November 2002	CONT	SECT	JOB	HIGHWAY
REVISIONS 4-03 7-13 9-07 8-14 5-10 5-21	0922	33	076	CS
	DIST		COUNTY	SHEET NO.
	LRD		WEBB	35

DATE:
FILE:

DISCLAIMER:
The use of this standard is governed by the "Texas Engineering Practice Act". No warranty of any kind is made by TxDOT for any purpose whatsoever. TxDOT assumes no responsibility for the conversion of this standard to other formats or for incorrect results or damages resulting from its use.

TYPICAL LOCATION OF CROSSROAD SIGNS

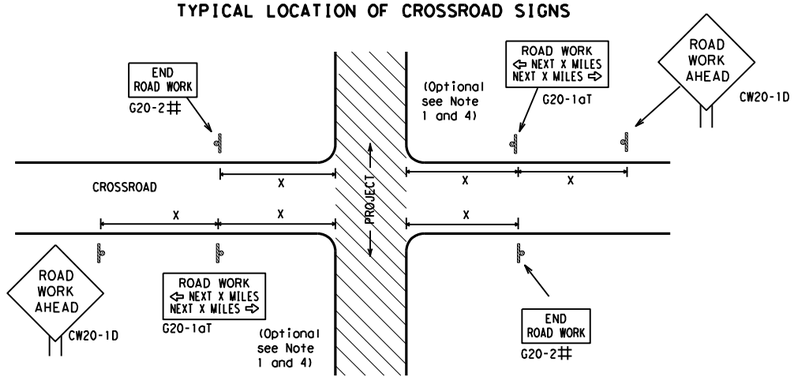

May be mounted on back of "ROAD WORK AHEAD"(CW20-1D) sign with approval of Engineer. (See note 2 below)

1. The typical minimum signing on a crossroad approach should be a "ROAD WORK AHEAD" (CW20-1D)sign and a (G20-2) "END ROAD WORK" sign, unless noted otherwise in plans.
2. The Engineer may use the reduced size 36" x 36" ROAD WORK AHEAD (CW20-1D) sign mounted back to back with the reduced size 36" x 18" "END ROAD WORK"(G20-2) sign on low volume crossroads (see Note 4 under "Typical Construction Warning Sign Size and Spacing"). See the "Standard Highway Sign Designs for Texas" manual for sign details. The Engineer may omit the advance warning signs on low volume crossroads. The Engineer will determine whether a road is low volume as per TMUTCD Part 5. This information shall be shown in the plans.
3. Based on existing field conditions, the Engineer/Inspector may require additional signs such as FLAGGER AHEAD, LOOSE GRAVEL, or other appropriate signs. When additional signs are required, these signs will be considered part of the minimum requirements. The Engineer/Inspector will determine the proper location and spacing of any sign not shown on the BC sheets, Traffic Control Plan sheets or the Work Zone Standard Sheets.
4. The "ROAD WORK NEXT X MILES"(G20-1aT)sign shall be required at high volume crossroads to advise motorists of the length of construction in either direction from the intersection. The Engineer will determine whether a roadway is considered high volume.
5. Additional traffic control devices may be shown elsewhere in the plans for higher volume crossroads.
6. When work occurs in the intersection area, appropriate traffic control devices, as shown elsewhere in the plans or as determined by the Engineer/Inspector, shall be in place.

T-INTERSECTION

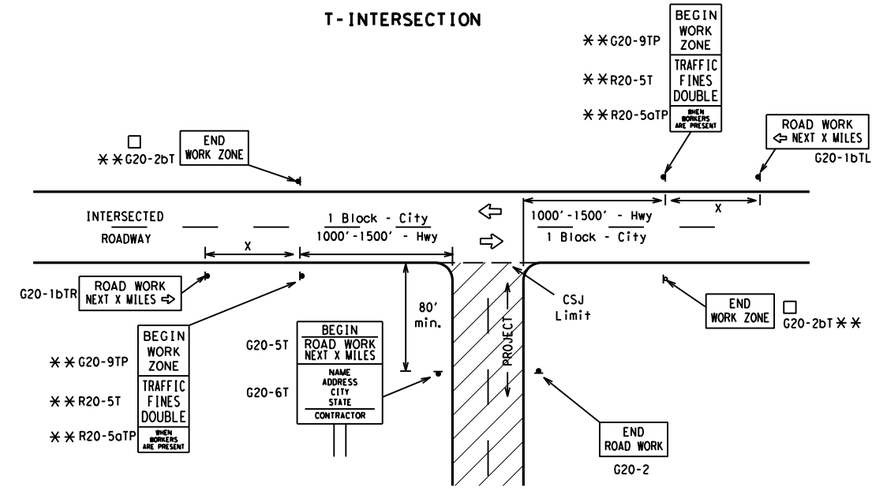

CSJ LIMITS AT T-INTERSECTION

1. The Engineer will determine the types and location of any additional traffic control devices, such as a flagger and accompanying signs, or other signs, that should be used when work is being performed at or near an intersection.
2. If construction closes the road at a T-intersection, the Contractor shall place the "CONTRACTOR NAME"(G20-6T) sign behind the Type 3 Barricades for the road closure (see BC(10) also). The "ROAD WORK NEXT X MILES" left arrow(G20-1bTL) and "ROAD WORK NEXT X MILES" right arrow (G20-1bTR)" signs shall be replaced by the detour signing called for in the plans.

TYPICAL CONSTRUCTION WARNING SIGN SIZE AND SPACING[1,5,6]

SIZE

Sign Number or Series	Conventional Road	Expressway/ Freeway
CW20[4] CW21 CW22 CW23 CW25	48" x 48"	48" x 48"
CW1, CW2, CW7, CW8, CW9, CW11, CW14	36" x 36"	48" x 48"
CW3, CW4, CW5, CW6, CW8-3, CW10, CW12	48" x 48"	48" x 48"

SPACING

Posted Speed	Sign △ Spacing "X"
MPH	Feet (Apprx.)
30	120
35	160
40	240
45	320
50	400
55	500[2]
60	600[2]
65	700[2]
70	800[2]
75	900[2]
80	1000[2]
✱	✱[3]

✱ For typical sign spacings on divided highways, expressways and freeways, see Part 6 of the "Texas Manual on Uniform Traffic Control Devices" (TMUTCD) typical application diagrams or TCP Standard Sheets.

△ Minimum distance from work area to first Advance Warning sign nearest the work area and/or distance between each additional sign.

GENERAL NOTES

1. Special or larger size signs may be used as necessary.
2. Distance between signs should be increased as required to have 1500 feet advance warning.
3. Distance between signs should be increased as required to have 1/2 mile or more advance warning.
4. 36" x 36" "ROAD WORK AHEAD" (CW20-1D)signs may be used on low volume crossroads at the discretion of the Engineer as per TMUTCD Part 5. See Note 2 under "Typical Location of Crossroad Signs".
5. Only diamond shaped warning sign sizes are indicated.
6. See sign size listing in "TMUTCD", Sign Appendix or the "Standard Highway Sign Designs for Texas" manual for complete list of available sign design sizes.

WORK AREAS IN MULTIPLE LOCATIONS WITHIN CSJ LIMITS

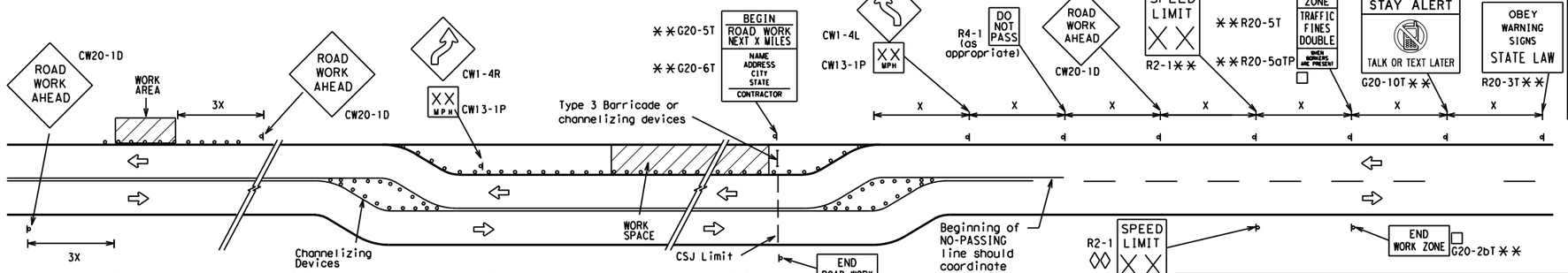

When extended distances occur between minimal work spaces, the Engineer/Inspector should ensure additional "ROAD WORK AHEAD"(CW20-1D)signs are placed in advance of these work areas to remind drivers they are still within the project limits. See the applicable TCP sheets for exact location and spacing of signs and channelizing devices.

SAMPLE LAYOUT OF SIGNING FOR WORK BEGINNING DOWNSTREAM OF THE CSJ LIMITS

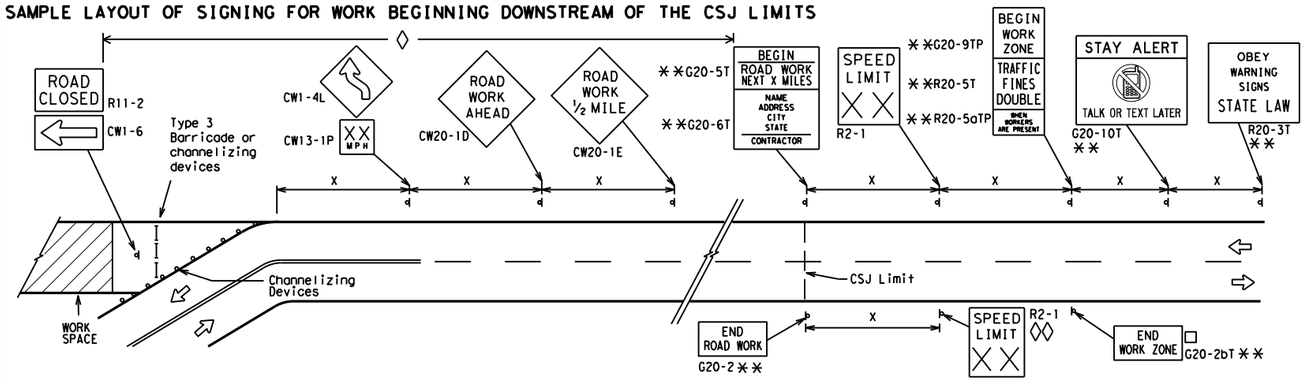

NOTES

The Contractor shall determine the appropriate distance to be placed on the G20-1 series signs and "BEGIN ROAD WORK NEXT X MILES"(G20-5T)sign for each specific project. This distance shall replace the "X" and shall be rounded to the nearest whole mile with the approval of the Engineer. No decimals shall be used.

□ The "BEGIN WORK ZONE"(G20-9TP) and "END WORK ZONE" (G20-2bT) shall be used as shown on the sample layout when advance signs are required outside the CSJ Limits. They inform the motorist of entering or leaving a part of the work zone lying outside the CSJ Limits where traffic fines may double if workers are present.

✱✱ CSJ limit signing is required for highway construction and maintenance work, with the exception of mobile operations.

◊ Area for placement of "ROAD WORK AHEAD" (CW20-1D)sign and other signs or devices as called for on the Traffic Control Plan.

◊◊ Contractor will install a regulatory speed limit sign at the end of the work zone.

LEGEND

⊢⊣	Type 3 Barricade
○ ○ ○	Channelizing Devices
▬	Sign
X	See Typical Construction Warning Sign Size and Spacing chart or the TMUTCD for sign spacing requirements.

SHEET 2 OF 12

Texas Department of Transportation — Traffic Safety Division Standard

BARRICADE AND CONSTRUCTION PROJECT LIMIT

BC(2)-21

FILE: bc-21.dgn	DN: TxDOT	CK: TxDOT	DW: TxDOT	CK: TxDOT
© TxDOT November 2002	CONT	SECT	JOB	HIGHWAY
REVISIONS	0922	33	076	CS
9-07 8-14	DIST		COUNTY	SHEET NO.
7-13 5-21	LRD		WEBB	36

DATE:
FILE:

TYPICAL APPLICATION OF WORK ZONE SPEED LIMIT SIGNS

Work zone speed limits shall be regulatory, established in accordance with the "Procedures for Establishing Speed Zones," and approved by the Texas Transportation Commission, or by City Ordinance when within Incorporated City Limits.

Reduced speeds should only be posted in the vicinity of work activity and not throughout the entire project.

Regulatory work zone speed signs (R2-1) shall be removed or covered during periods when they are not needed.

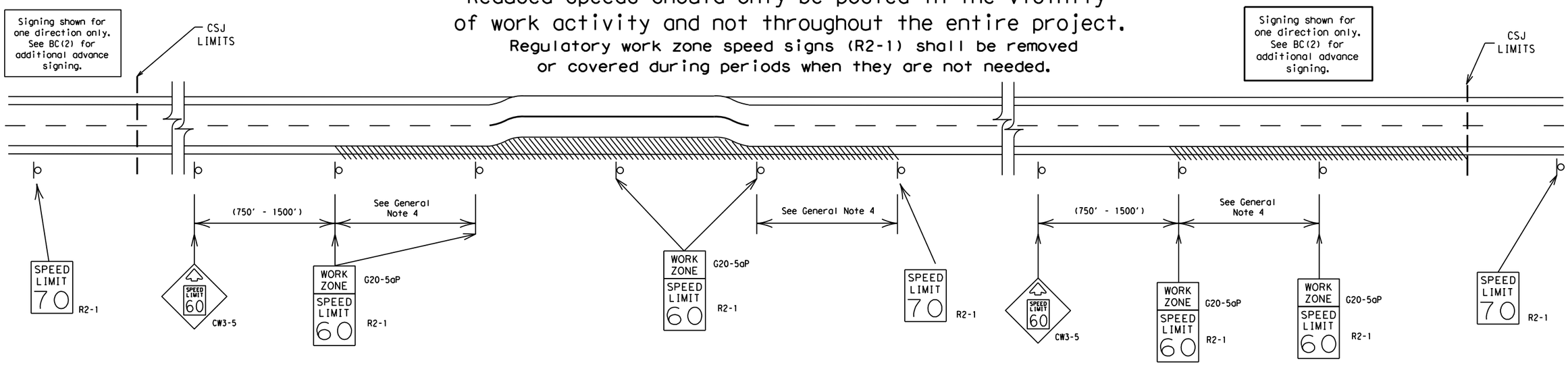

GUIDANCE FOR USE:

LONG/INTERMEDIATE TERM WORK ZONE SPEED LIMITS

This type of work zone speed limit should be included on the design of the traffic control plans when restricted geometrics with a lower design speed are present in the work zone and modification of the geometrics to a higher design speed is not feasible.

Long/Intermediate Term Work Zone Speed Limit signs, when approved as described above, should be posted and visible to the motorist when work activity is present. Work activity may also be defined as a change in the roadway that requires a reduced speed for motorists to safely negotiate the work area, including:

a) rough road or damaged pavement surface
b) substantial alteration of roadway geometrics (diversions)
c) construction detours
d) grade
e) width
f) other conditions readily apparent to the driver

As long as any of these conditions exist, the work zone speed limit signs should remain in place.

SHORT TERM WORK ZONE SPEED LIMITS

This type of work zone speed limit may be included on the design of the traffic control plans when workers or equipment are not behind concrete barrier, when work activity is within 10 feet of the traveled way or actually in the traveled way.

Short Term Work Zone Speed Limit signs should be posted and visible to the motorists only when work activity is present. When work activity is not present, signs shall be removed or covered.
(See Removing or Covering on BC(4)).

GENERAL NOTES

1. Regulatory work zone speed limits should be used only for sections of construction projects where speed control is of major importance.
2. Regulatory work zone speed limit signs shall be placed on supports at a 7 foot minimum mounting height.
3. Speed zone signs are illustrated for one direction of travel and are normally posted for each direction of travel.
4. Frequency of work zone speed limit signs should be:
   40 mph and greater 0.2 to 2 miles
   35 mph and less 0.2 to 1 mile
5. Regulatory speed limit signs shall have black legend and border on a white reflective background (See "Reflective Sheeting" on BC(4)).
6. Fabrication, erection and maintenance of the"ADVANCE SPEED LIMIT"(CW3-5)sign, "WORK ZONE"(G20-5aP) plaque and the "SPEED LIMIT"(R2-1)signs shall not be paid for directly, but shall be considered subsidiary to Item 502.
7. Turning signs from view, laying signs over or down will not be allowed, unless as otherwise noted under "REMOVING OR COVERING" on BC(4).
8. Techniques that may help reduce traffic speeds include but are not limited to:
   A. Law enforcement.
   B. Flagger stationed next to sign.
   C. Portable changeable message sign (PCMS).
   D. Low-power (drone) radar transmitter.
   E. Speed monitor trailers or signs.
9. Speeds shown on details above are for illustration only. Work Zone Speed Limits should only be posted as approved for each project.
10. For more specific guidance concerning the type of work, work zone conditions and factors impacting allowable regulatory construction speed zone reduction see TxDOT form #1204 in the TxDOT e-form system.

DISCLAIMER:
The use of this standard is governed by the "Texas Engineering Practice Act". No warranty of any kind is made by TxDOT for any purpose whatsoever. TxDOT assumes no responsibility for the conversion of this standard to other formats or for incorrect results or damages resulting from its use.

DATE:
FILE:

SHEET 3 OF 12

Texas Department of Transportation — Traffic Safety Division Standard

BARRICADE AND CONSTRUCTION WORK ZONE SPEED LIMIT

BC(3)-21

FILE: bc-21.dgn	DN: TxDOT	CK: TxDOT	DW: TxDOT	CK: TxDOT
©TxDOT November 2002	CONT	SECT	JOB	HIGHWAY
REVISIONS	0922	33	076	CS
9-07 8-14	DIST		COUNTY	SHEET NO.
7-13 5-21	LRD		WEBB	37

DISCLAIMER:
The use of this standard is governed by the "Texas Engineering Practice Act". No warranty of any kind is made by TxDOT for any purpose whatsoever. TxDOT assumes no responsibility for the conversion of this standard to other formats or for incorrect results or damages resulting from its use.

TYPICAL MINIMUM CLEARANCES FOR LONG TERM AND INTERMEDIATE TERM SIGNS

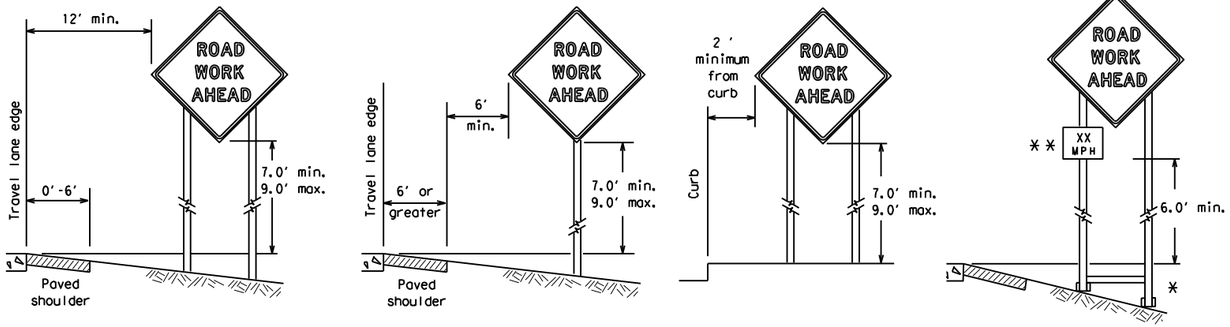

✱ When placing skid supports on unlevel ground, the leg post lengths must be adjusted so the sign appears straight and plumb. Objects shall NOT be placed under skids as a means of leveling.

✱✱ When plaques are placed on dual-leg supports, they should be attached to the upright nearest the travel lane. Supplemental plaques (advisory or distance) should not cover the surface of the parent sign.

ATTACHMENT FOR SIGN SUPPORTS

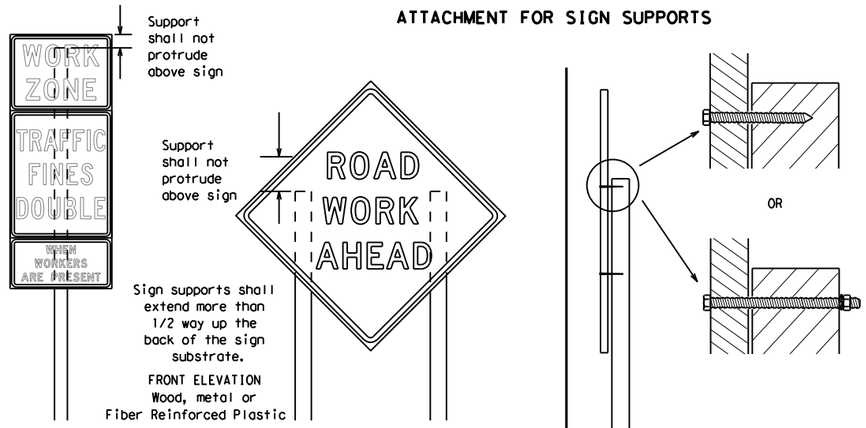

Attachment to wooden supports will be by bolts and nuts or screws. Use TxDOT's or manufacturer's recommended procedures for attaching sign substrates to other types of sign supports

Nails shall NOT be allowed. Each sign shall be attached directly to the sign support. Multiple signs shall not be joined or spliced by any means. Wood supports shall not be extended or repaired by splicing or other means.

Splicing embedded perforated square metal tubing in order to extend post height will only be allowed when the splice is made using four bolts, two above and two below the spice point. Splice must be located entirely behind the sign substrate, not near the base of the support. Splice insert lengths should be at least 5 times nominal post size, centered on the splice and of at least the same gauge material.

STOP/SLOW PADDLES

1. STOP/SLOW paddles are the primary method to control traffic by flaggers. The STOP/SLOW paddle size should be 24" x 24".
2. STOP/SLOW paddles shall be retroreflectorized when used at night.
3. STOP/SLOW paddles may be attached to a staff with a minimum length of 6' to the bottom of the sign.
4. Any lights incorporated into the STOP or SLOW paddle faces shall only be as specifically described in Section 6E.03 Hand Signaling Devices in the TMUTCD.

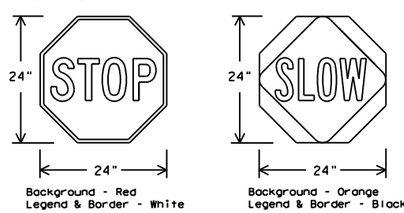

SHEETING REQUIREMENTS (WHEN USED AT NIGHT)		
USAGE	COLOR	SIGN FACE MATERIAL
BACKGROUND	RED	TYPE B OR C SHEETING
BACKGROUND	ORANGE	TYPE B_{FL} OR C_{FL} SHEETING
LEGEND & BORDER	WHITE	TYPE B OR C SHEETING
LEGEND & BORDER	BLACK	ACRYLIC NON-REFLECTIVE FILM

CONTRACTOR REQUIREMENTS FOR MAINTAINING PERMANENT SIGNS WITHIN THE PROJECT LIMITS

1. Permanent signs are used to give notice of traffic laws or regulations, call attention to conditions that are potentially hazardous to traffic operations, show route designations, destinations, directions, distances, services, points of interest, and other geographical, recreational, specific service (LOGO), or cultural information. Drivers proceeding through a work zone need the same, if not better route guidance as normally installed on a roadway without construction.
2. When permanent regulatory or warning signs conflict with work zone conditions, remove or cover the permanent signs until the permanent sign message matches the roadway condition. For details for covering large guide signs see the TS-CD standard.
3. When existing permanent signs are moved and relocated due to construction purposes, they shall be visible to motorists at all times.
4. If existing signs are to be relocated on their original supports, they shall be installed on crashworthy bases as shown on the SMD Standard sheets. The signs shall meet the required mounting heights shown on the BC Sheets or the SMD Standards. This work should be paid for under the appropriate pay item for relocating existing signs.
5. If permanent signs are to be removed and relocated using temporary supports, the Contractor shall use crashworthy supports as shown on the BC standard sheets, TLRS standard sheets or the CWZTCD list. The signs shall meet the required mounting heights shown on the BC, or the SMD standard sheets during construction. This work should be paid for under the appropriate pay item for relocating existing signs.
6. Any sign or traffic control device that is struck or damaged by the Contractor or his/her construction equipment shall be replaced as soon as possible by the Contractor to ensure proper guidance for the motorists. This will be subsidiary to Item 502.

GENERAL NOTES FOR WORK ZONE SIGNS

1. Contractor shall install and maintain signs in a straight and plumb condition and/or as directed by the Engineer.
2. Wooden sign posts shall be painted white.
3. Barricades shall NOT be used as sign supports.
4. All signs shall be installed in accordance with the plans or as directed by the Engineer. Signs shall be used to regulate, warn, and guide the traveling public safely through the work zone.
5. The Contractor may furnish either the sign design shown in the plans or in the "Standard Highway Sign Designs for Texas" (SHSD). The Engineer/Inspector may require the Contractor to furnish other work zone signs that are shown in the TMUTCD but may have been omitted from the plans. Any variation in the plans shall be documented by written agreement between the Engineer and the Contractor's Responsible Person. All changes must be documented in writing before being implemented. This can include documenting the changes in the Inspector's TxDOT diary and having both the Inspector and Contractor initial and date the agreed upon changes.
6. The Contractor shall furnish sign supports listed in the "Compliant Work Zone Traffic Control Device List" (CWZTCD) for small roadside signs. Supports for temporary large roadside signs shall meet the requirements detailed on the Temporary Large Roadside Signs (TLRS) standard sheets. The Contractor shall install the sign support in accordance with the manufacturer's recommendations. If there is a question regarding installation procedures, the Contractor shall furnish the Engineer a copy of the manufacturer's installation recommendations so the Engineer can verify the correct procedures are being followed.
7. The Contractor is responsible for installing signs on approved supports and replacing signs with damaged or cracked substrates and/or damaged or marred reflective sheeting as directed by the Engineer/Inspector.
8. Identification markings may be shown only on the back of the sign substrate. The maximum height of letters and/or company logos used for identification shall be 1 inch.
9. The Contractor shall replace damaged wood posts. New or damaged wood sign posts shall not be spliced.

DURATION OF WORK (as defined by the "Texas Manual on Uniform Traffic Control Devices" Part 6)

1. The types of sign supports, sign mounting height, the size of signs, and the type of sign substrates can vary based on the type of work being performed. The Engineer is responsible for selecting the appropriate size sign for the type of work being performed. The Contractor is responsible for ensuring the sign support, sign mounting height and substrate meets manufacturer's recommendations in regard to crashworthiness and duration of work requirements.
   a. Long-term stationary - work that occupies a location more than 3 days.
   b. Intermediate-term stationary - work that occupies a location more than one daylight period up to 3 days, or nighttime work lasting more than one hour.
   c. Short-term stationary - daytime work that occupies a location for more than 1 hour in a single daylight period.
   d. Short, duration - work that occupies a location up to 1 hour.
   e. Mobile - work that moves continuously or intermittently (stopping for up to approximately 15 minutes.)

SIGN MOUNTING HEIGHT

1. The bottom of Long-term/Intermediate-term signs shall be at least 7 feet, but not more than 9 feet, above the paved surface, except as shown for supplemental plaques mounted below other signs.
2. The bottom of Short-term/Short Duration signs shall be a minimum of 1 foot above the pavement surface but no more than 2 feet above the ground.
3. Long-term/Intermediate-term Signs may be used in lieu of Short-term/Short Duration signing.
4. Short-term/Short Duration signs shall be used only during daylight and shall be removed at the end of the workday or raised to appropriate Long-term/Intermediate sign height.
5. Regulatory signs shall be mounted at least 7 feet, but not more than 9 feet, above the paved surface regardless of work duration.

SIZE OF SIGNS

1. The Contractor shall furnish the sign sizes shown on BC (2) unless otherwise shown in the plans or as directed by the Engineer.

SIGN SUBSTRATES

1. The Contractor shall ensure the sign substrate is installed in accordance with the manufacturer's recommendations for the type of sign support that is being used. The CWZTCD lists each substrate that can be used on the different types and models of sign supports.
2. "Mesh" type materials are NOT an approved sign substrate, regardless of the tightness of the weave.
3. All wooden individual sign panels fabricated from 2 or more pieces shall have one or more plywood cleat, 1/2" thick by 6" wide, fastened to the back of the sign and extending fully across the sign. The cleat shall be attached to the back of the sign using wood screws that do not penetrate the face of the sign panel. The screws shall be placed on both sides of the splice and spaced at 6" centers. The Engineer may approve other methods of splicing the sign face.

REFLECTIVE SHEETING

1. All signs shall be retroreflective and constructed of sheeting meeting the color and retro-reflectivity requirements of DMS-8300 for rigid signs or DMS-8310 for roll-up signs. The web address for DMS specifications is shown on BC(1).
2. White sheeting, meeting the requirements of DMS-8300 Type A, shall be used for signs with a white background.
3. Orange sheeting, meeting the requirements of DMS-8300 Type B_{FL} or Type C_{FL}, shall be used for rigid signs with orange backgrounds.

SIGN LETTERS

1. All sign letters and numbers shall be clear, and open rounded type uppercase alphabet letters as approved by the Federal Highway Administration (FHWA) and as published in the "Standard Highway Sign Design for Texas" manual. Signs, letters and numbers shall be of first class workmanship in accordance with Department Standards and Specifications.

REMOVING OR COVERING

1. When sign messages may be confusing or do not apply, the signs shall be removed or completely covered.
2. Long-term stationary or intermediate stationary signs installed on square metal tubing may be turned away from traffic 90 degrees when the sign message is not applicable. This technique may not be used for signs installed in the median of divided highways or near any intersections where the sign may be seen from approaching traffic.
3. Signs installed on wooden skids shall not be turned at 90 degree angles to the roadway. These signs should be removed or completely covered when not required.
4. When signs are covered, the material used shall be opaque, such as heavy mil black plastic, or other materials which will cover the entire sign face and maintain their opaque properties under automobile headlights at night, without damaging the sign sheeting.
5. Burlap shall NOT be used to cover signs.
6. Duct tape or other adhesive material shall NOT be affixed to a sign face.
7. Signs and anchor stubs shall be removed and holes backfilled upon completion of work.

SIGN SUPPORT WEIGHTS

1. Where sign supports require the use of weights to keep from turning over, the use of sandbags with dry, cohesionless sand should be used.
2. The sandbags will be tied shut to keep the sand from spilling and to maintain a constant weight.
3. Rock, concrete, iron, steel or other solid objects shall not be permitted for use as sign support weights.
4. Sandbags should weigh a minimum of 35 lbs and a maximum of 50 lbs.
5. Sandbags shall be made of a durable material that tears upon vehicular impact. Rubber (such as tire inner tubes) shall NOT be used.
6. Rubber ballasts designed for channelizing devices should not be used for ballast on portable sign supports. Sign supports designed and manufactured with rubber bases may be used when shown on the CWZTCD list.
7. Sandbags shall only be placed along or laid over the base supports of the traffic control device and shall not be suspended above ground level or hung with rope, wire, chains or other fasteners. Sandbags shall be placed along the length of the skids to weigh down the sign support.
8. Sandbags shall NOT be placed under the skid and shall not be used to level sign supports placed on slopes.

FLAGS ON SIGNS

1. Flags may be used to draw attention to warning signs. When used, the flag shall be 16 inches square or larger and shall be orange or fluorescent red-orange in color. Flags shall not be allowed to cover any portion of the sign face.

Texas Department of Transportation — Traffic Safety Division Standard

BARRICADE AND CONSTRUCTION TEMPORARY SIGN NOTES

BC(4)-21

FILE: bc-21.dgn	DN: TxDOT	CK: TxDOT	DW: TxDOT	CK: TxDOT
© TxDOT November 2002	CONT	SECT	JOB	HIGHWAY
REVISIONS	0922	33	076	CS
9-07 8-14	DIST		COUNTY	SHEET NO.
7-13 5-21	LRD		WEBB	38

DATE:
FILE:

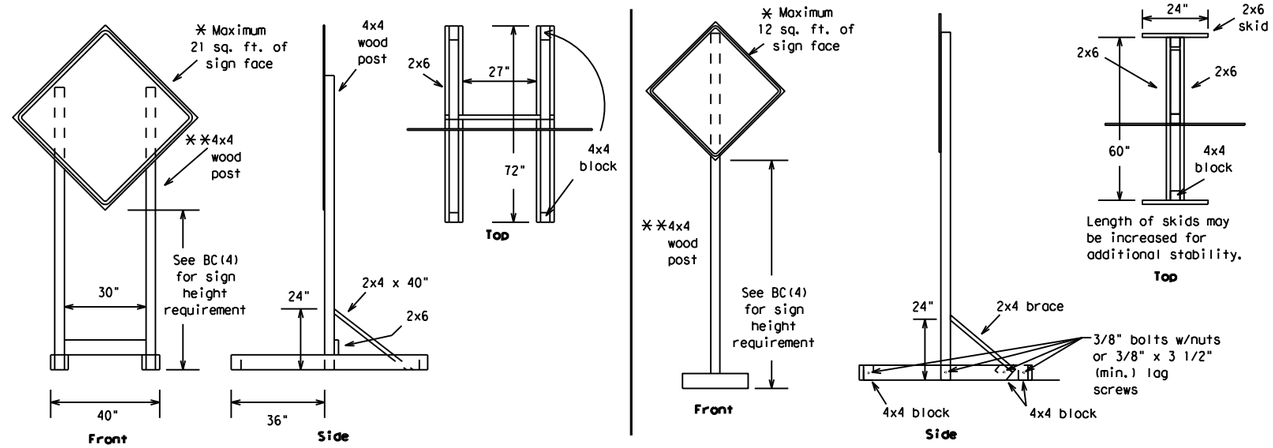

SKID MOUNTED WOOD SIGN SUPPORTS

* LONG/INTERMEDIATE TERM STATIONARY - PORTABLE SKID MOUNTED SIGN SUPPORTS

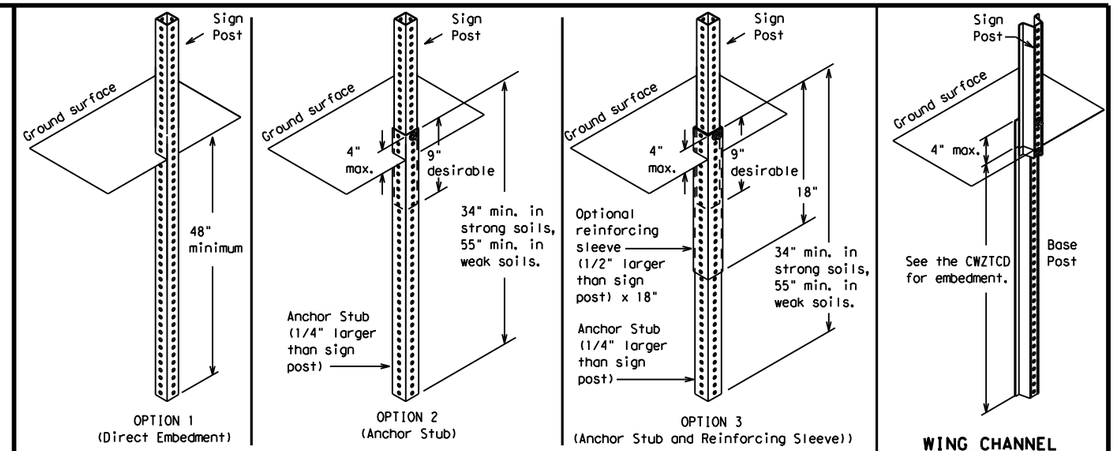

PERFORATED SQUARE METAL TUBING

WING CHANNEL
Lap-splice/base bolted anchor

GROUND MOUNTED SIGN SUPPORTS

Refer to the CWZTCD and the manufacturer's installation procedure for each type sign support.
The maximum sign square footage shall adhere to the manufacturer's recommendation.
Two post installations can be used for larger signs.

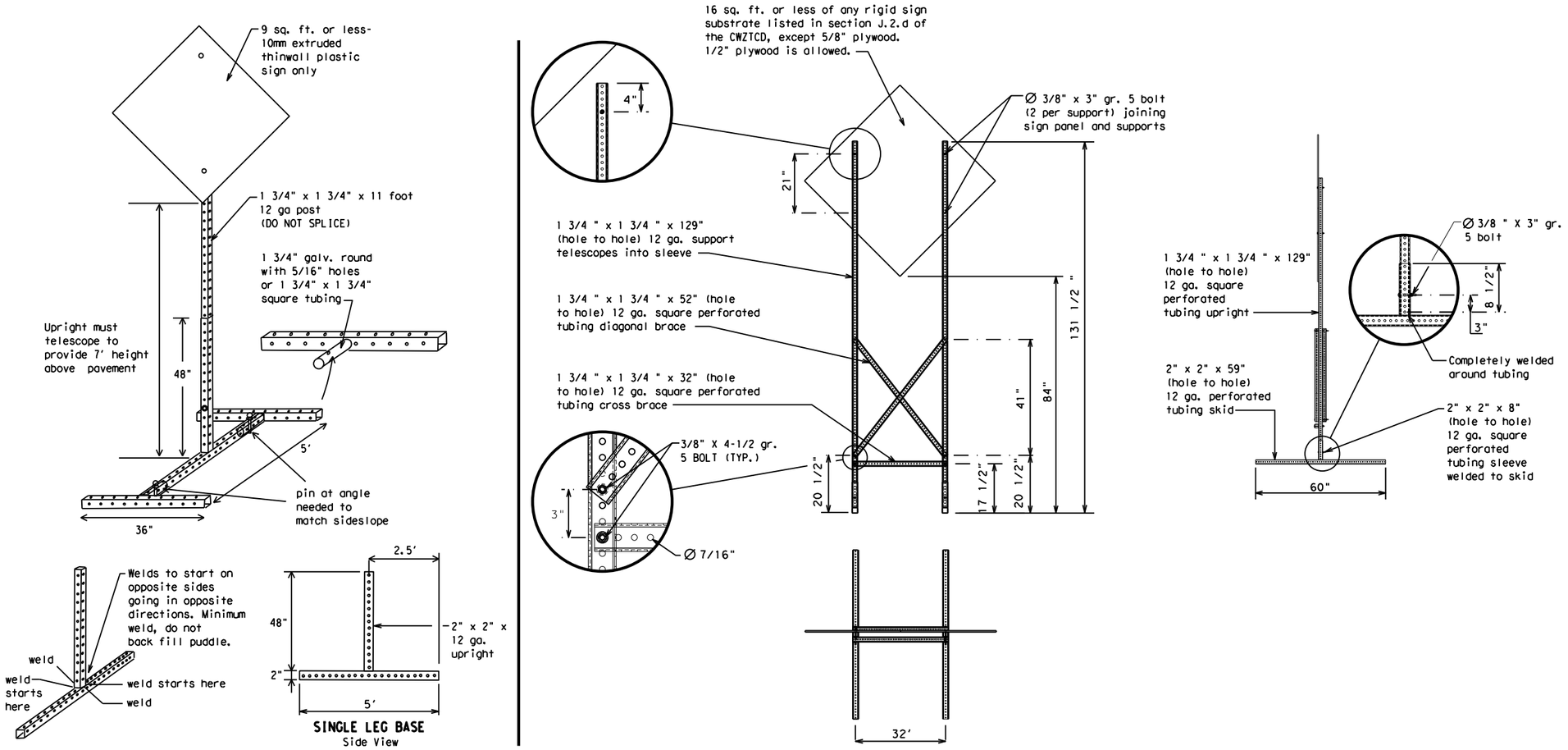

SKID MOUNTED PERFORATED SQUARE STEEL TUBING SIGN SUPPORTS

* LONG/INTERMEDIATE TERM STATIONARY - PORTABLE SKID MOUNTED SIGN SUPPORTS

WEDGE ANCHORS

Both steel and plastic Wedge Anchor Systems as shown on the SMD Standard Sheets may be used as temporary sign supports for signs up to 10 square feet of sign face. They may be set in concrete or in sturdy soils if approved by the Engineer. (See web address for "Traffic Engineering Standard Sheets" on BC(1)).

OTHER DESIGNS

MORE DETAILS OF APPROVED LONG/INTERMEDIATE AND SHORT TERM SUPPORTS CAN BE FOUND ON THE CWZTCD LIST. SEE BC(1) FOR WEBSITE LOCATION.

GENERAL NOTES

1. Nails may be used in the assembly of wooden sign supports, but 3/8" bolts with nuts or 3/8" x 3 1/2" lag screws must be used on every joint for final connection.
2. No more than 2 sign posts shall be placed within a 7 ft. circle, except for specific materials noted on the CWZTCD List.
3. When project is completed, all sign supports and foundations shall be removed from the project site. This will be considered subsidiary to Item 502.

* See BC(4) for definition of "Work Duration."

** Wood sign posts MUST be one piece. Splicing will NOT be allowed. Posts shall be painted white.

☐ See the CWZTCD for the type of sign substrate that can be used for each approved sign support.

Texas Department of Transportation — Traffic Safety Division Standard

BARRICADE AND CONSTRUCTION TYPICAL SIGN SUPPORT

BC(5)-21

FILE: bc-21.dgn	DN: TxDOT	CK: TxDOT	DW: TxDOT	CK: TxDOT
© TxDOT November 2002	CONT	SECT	JOB	HIGHWAY
REVISIONS	0922	33	076	CS
9-07 8-14	DIST		COUNTY	SHEET NO.
7-13 5-21	LRD		WEBB	39

DISCLAIMER:
The use of this standard is governed by the "Texas Engineering Practice Act". No warranty of any kind is made by TxDOT for any purpose whatsoever. TxDOT assumes no responsibility for the conversion of this standard to other formats or for incorrect results or damages resulting from its use.

DATE:
FILE:

WHEN NOT IN USE, REMOVE THE PCMS FROM THE RIGHT-OF-WAY OR PLACE THE PCMS BEHIND BARRIER OR GUARDRAIL WITH SIGN PANEL TURNED PARALLEL TO TRAFFIC

PORTABLE CHANGEABLE MESSAGE SIGNS

1. The Engineer/Inspector shall approve all messages used on portable changeable message signs (PCMS).
2. Messages on PCMS should contain no more than 8 words (about four to eight characters per word), not including simple words such as "TO," "FOR," "AT," etc.
3. Messages should consist of a single phase, or two phases that alternate. Three-phase messages are not allowed. Each phase of the message should convey a single thought, and must be understood by itself.
4. Use the word "EXIT" to refer to an exit ramp on a freeway; i.e., "EXIT CLOSED." Do not use the term "RAMP."
5. Always use the route or interstate designation (IH, US, SH, FM) along with the number when referring to a roadway.
6. When in use, the bottom of a stationary PCMS message panel should be a minimum 7 feet above the roadway, where possible.
7. The message term "WEEKEND" should be used only if the work is to start on Saturday morning and end by Sunday evening at midnight. Actual days and hours of work should be displayed on the PCMS if work is to begin on Friday evening and/or continue into Monday morning.
8. The Engineer/Inspector may select one of two options which are available for displaying a two-phase message on a PCMS. Each phase may be displayed for either four seconds each or for three seconds each.
9. Do not "flash" messages or words included in a message. The message should be steady burn or continuous while displayed.
10. Do not present redundant information on a two-phase message; i.e., keeping two lines of the message the same and changing the third line.
11. Do not use the word "Danger" in message.
12. Do not display the message "LANES SHIFT LEFT" or "LANES SHIFT RIGHT" on a PCMS. Drivers do not understand the message.
13. Do not display messages that scroll horizontally or vertically across the face of the sign.
14. The following table lists abbreviated words and two-word phrases that are acceptable for use on a PCMS. Both words in a phrase must be displayed together. Words or phrases not on this list should not be abbreviated, unless shown in the TMUTCD.
15. PCMS character height should be at least 18 inches for trailer mounted units. They should be visible from at least 1/2 (.5) mile and the text should be legible from at least 600 feet at night and 800 feet in daylight. Truck mounted units must have a character height of 10 inches and must be legible from at least 400 feet.
16. Each line of text should be centered on the message board rather than left or right justified.
17. If disabled, the PCMS should default to an illegible display that will not alarm motorists and will only be used to alert workers that the PCMS has malfunctioned. A pattern such as a series of horizontal solid bars is appropriate.

WORD OR PHRASE	ABBREVIATION
Access Road	ACCS RD
Alternate	ALT
Avenue	AVE
Best Route	BEST RTE
Boulevard	BLVD
Bridge	BRDG
Cannot	CANT
Center	CTR
Construction Ahead	CONST AHD
CROSSING	XING
Detour Route	DETOUR RTE
Do Not	DONT
East	E
Eastbound	(route) E
Emergency	EMER
Emergency Vehicle	EMER VEH
Entrance, Enter	ENT
Express Lane	EXP LN
Expressway	EXPWY
XXXX Feet	XXXX FT
Fog Ahead	FOG AHD
Freeway	FRWY, FWY
Freeway Blocked	FWY BLKD
Friday	FRI
Hazardous Driving	HAZ DRIVING
Hazardous Material	HAZMAT
High-Occupancy	HOV
Vehicle Highway	HWY
Hour(s)	HR, HRS
Information	INFO
It Is	ITS
Junction	JCT
Left	LFT
Left Lane	LFT LN
Lane Closed	LN CLOSED
Lower Level	LWR LEVEL
Maintenance	MAINT

WORD OR PHRASE	ABBREVIATION
Major	MAJ
Miles	MI
Miles Per Hour	MPH
Minor	MNR
Monday	MON
Normal	NORM
North	N
Northbound	(route) N
Parking	PKING
Road	RD
Right Lane	RT LN
Saturday	SAT
Service Road	SERV RD
Shoulder	SHLDR
Slippery	SLIP
South	S
Southbound	(route) S
Speed	SPD
Street	ST
Sunday	SUN
Telephone	PHONE
Temporary	TEMP
Thursday	THURS
To Downtown	TO DWNTN
Traffic	TRAF
Travelers	TRVLRS
Tuesday	TUES
Time Minutes	TIME MIN
Upper Level	UPR LEVEL
Vehicles (s)	VEH, VEHS
Warning	WARN
Wednesday	WED
Weight Limit	WT LIMIT
West	W
Westbound	(route) W
Wet Pavement	WET PVMT
Will Not	WONT

Roadway designation # IH-number, US-number, SH-number, FM-number

RECOMMENDED PHASES AND FORMATS FOR PCMS MESSAGES DURING ROADWORK ACTIVITIES

(The Engineer may approve other messages not specifically covered here.)

Phase 1: Condition Lists

Road/Lane/Ramp Closure List

FREEWAY CLOSED X MILE	FRONTAGE ROAD CLOSED
ROAD CLOSED AT SH XXX	SHOULDER CLOSED XXX FT
ROAD CLSD AT FM XXXX	RIGHT LN CLOSED XXX FT
RIGHT X LANES CLOSED	RIGHT X LANES OPEN
CENTER LANE CLOSED	DAYTIME LANE CLOSURES
NIGHT LANE CLOSURES	I-XX SOUTH EXIT CLOSED
VARIOUS LANES CLOSED	EXIT XXX CLOSED X MILE
EXIT CLOSED	RIGHT LN TO BE CLOSED
MALL DRIVEWAY CLOSED	X LANES CLOSED TUE - FRI
XXXXXXXX BLVD CLOSED	

Other Condition List

ROADWORK XXX FT	ROAD REPAIRS XXXX FT
FLAGGER XXXX FT	LANE NARROWS XXXX FT
RIGHT LN NARROWS XXXX FT	TWO-WAY TRAFFIC XX MILE
MERGING TRAFFIC XXXX FT	CONST TRAFFIC XXX FT
LOOSE GRAVEL XXXX FT	UNEVEN LANES XXXX FT
DETOUR X MILE	ROUGH ROAD XXXX FT
ROADWORK PAST SH XXXX	ROADWORK NEXT FRI-SUN
BUMP XXXX FT	US XXX EXIT X MILES
TRAFFIC SIGNAL XXXX FT	LANES SHIFT *

* LANES SHIFT in Phase 1 must be used with STAY IN LANE in Phase 2.

Phase 2: Possible Component Lists

Action to Take/Effect on Travel List

MERGE RIGHT	FORM X LINES RIGHT
DETOUR NEXT X EXITS	USE XXXXX RD EXIT
USE EXIT XXX	USE EXIT I-XX NORTH
STAY ON US XXX SOUTH	USE I-XX E TO I-XX N
TRUCKS USE US XXX N	WATCH FOR TRUCKS
WATCH FOR TRUCKS	EXPECT DELAYS
EXPECT DELAYS	PREPARE TO STOP
REDUCE SPEED XXX FT	END SHOULDER USE
USE OTHER ROUTES	WATCH FOR WORKERS
STAY IN LANE *	

Location List

AT FM XXXX
BEFORE RAILROAD CROSSING
NEXT X MILES
PAST US XXX EXIT
XXXXXXX TO XXXXXXX
US XXX TO FM XXXX

Warning List

SPEED LIMIT XX MPH
MAXIMUM SPEED XX MPH
MINIMUM SPEED XX MPH
ADVISORY SPEED XX MPH
RIGHT LANE EXIT
USE CAUTION
DRIVE SAFELY
DRIVE WITH CARE

** Advance Notice List

TUE-FRI XX AM- X PM
APR XX- XX X PM-X AM
BEGINS MONDAY
BEGINS MAY XX
MAY X-X XX PM - XX AM
NEXT FRI-SUN
XX AM TO XX PM
NEXT TUE AUG XX
TONIGHT XX PM- XX AM

** See Application Guidelines Note 6.

APPLICATION GUIDELINES

1. Only 1 or 2 phases are to be used on a PCMS.
2. The 1st phase (or both) should be selected from the "Road/Lane/Ramp Closure List" and the "Other Condition List".
3. A 2nd phase can be selected from the "Action to Take/Effect on Travel, Location, General Warning, or Advance Notice Phase Lists".
4. A Location Phase is necessary only if a distance or location is not included in the first phase selected.
5. If two PCMS are used in sequence, they must be separated by a minimum of 1000 ft. Each PCMS shall be limited to two phases, and should be understandable by themselves.
6. For advance notice, when the current date is within seven days of the actual work date, calendar days should be replaced with days of the week. Advance notification should typically be for no more than one week prior to the work.

WORDING ALTERNATIVES

1. The words RIGHT, LEFT and ALL can be interchanged as appropriate.
2. Roadway designations IH, US, SH, FM and LP can be interchanged as appropriate.
3. EAST, WEST, NORTH and SOUTH (or abbreviations E, W, N and S) can be interchanged as appropriate.
4. Highway names and numbers replaced as appropriate.
5. ROAD, HIGHWAY and FREEWAY can be interchanged as needed.
6. AHEAD may be used instead of distances if necessary.
7. FT and MI, MILE and MILES interchanged as appropriate.
8. AT, BEFORE and PAST interchanged as needed.
9. Distances or AHEAD can be eliminated from the message if a location phase is used.

PCMS SIGNS WITHIN THE R.O.W. SHALL BE BEHIND GUARDRAIL OR CONCRETE BARRIER OR SHALL HAVE A MINIMUM OF FOUR (4) PLASTIC DRUMS PLACED PERPENDICULAR TO TRAFFIC ON THE UPSTREAM SIDE OF THE PCMS, WHEN EXPOSED TO ONE DIRECTION OF TRAFFIC. WHEN EXPOSED TO TWO WAY TRAFFIC, THE FOUR DRUMS SHOULD BE PLACED WITH ONE DRUM AT EACH OF THE FOUR CORNERS OF THE UNIT.

FULL MATRIX PCMS SIGNS

1. When Full Matrix PCMS signs are used, the character height and legibility/visibility requirements shall be maintained as listed in Note 15 under "PORTABLE CHANGEABLE MESSAGE SIGNS" above.
2. When symbol signs, such as the "Flagger Symbol"(CW20-7) are represented graphically on the Full Matrix PCMS sign and, with the approval of the Engineer, it shall maintain the legibility/visibility requirement listed above.
3. When symbol signs are represented graphically on the Full Matrix PCMS, they shall only supplement the use of the static sign represented, and shall not substitute for, or replace that sign.
4. A full matrix PCMS may be used to simulate a flashing arrow board provided it meets the visibility, flash rate and dimming requirements on BC(7), for the same size arrow.

DISCLAIMER:
The use of this standard is governed by the "Texas Engineering Practice Act". No warranty of any kind is made by TxDOT for any purpose whatsoever. TxDOT assumes no responsibility for the conversion of this standard to other formats or for incorrect results or damages resulting from its use.

DATE:
FILE:

Texas Department of Transportation — Traffic Safety Division Standard

BARRICADE AND CONSTRUCTION PORTABLE CHANGEABLE MESSAGE SIGN (PCMS)

BC(6)-21

FILE: bc-21.dgn	DN: TxDOT	CK: TxDOT	DW: TxDOT	CK: TxDOT
© TxDOT November 2002	CONT	SECT	JOB	HIGHWAY
REVISIONS	0922	33	076	CS
9-07 8-14	DIST		COUNTY	SHEET NO.
7-13 5-21	LRD		WEBB	40

1. Barrier Reflectors shall be pre-qualified, and conform to the color and reflectivity requirements of DMS-8600. A list of prequalified Barrier Reflectors can be found at the Material Producer List web address shown on BC(1).
2. Color of Barrier Reflectors shall be as specified in the TMUTCD. The cost of the reflectors shall be considered subsidiary to Item 512.

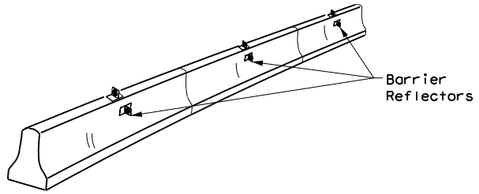

CONCRETE TRAFFIC BARRIER (CTB)

3. Where traffic is on one side of the CTB, two (2) Barrier Reflectors shall be mounted in approximately the midsection of each section of CTB. An alternate mounting location is uniformly spaced at one end of each CTB. This will allow for attachment of a barrier grapple without damaging the reflector. The Barrier Reflector mounted on the side of the CTB shall be located directly below the reflector mounted on top of the barrier, as shown in the detail above.
4. Where CTB separates two-way traffic, three barrier reflectors shall be mounted on each section of CTB. The reflector unit on top shall have two yellow reflective faces (Bi-Directional)while the reflectors on each side of the barrier shall have one yellow reflective face, as shown in the detail above.
5. When CTB separates traffic traveling in the same direction, no barrier reflectors will be required on top of the CTB.
6. Barrier Reflector units shall be yellow or white in color to match the edgeline being supplemented.
7. Maximum spacing of Barrier Reflectors is forty (40) feet.
8. Pavement markers or temporary flexible-reflective roadway marker tabs shall NOT be used as CTB delineation.
9. Attachment of Barrier Reflectors to CTB shall be per manufacturer's recommendations.
10. Missing or damaged Barrier Reflectors shall be replaced as directed by the Engineer.
11. Single slope barriers shall be delineated as shown on the above detail.

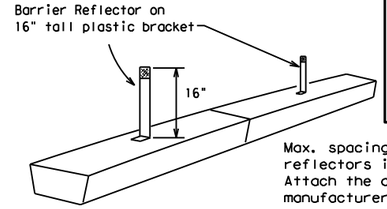

Max. spacing of barrier reflectors is 20 feet. Attach the delineators as per manufacturer's recommendations.

LOW PROFILE CONCRETE BARRIER (LPCB)

LOW PROFILE CONCRETE BARRIER (LPCB) USED IN WORK ZONES

LPCB is approved for use in work zone locations, where the posted speed is 45mph, or less. See Roadway Standard Sheet LPCB.

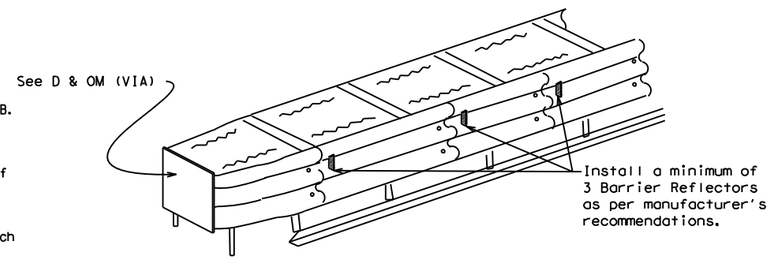

DELINEATION OF END TREATMENTS

END TREATMENTS FOR CTB'S USED IN WORK ZONES

End treatments used on CTB's in work zones shall meet the apppropriate crashworthy standards as defined in the Manual for Assessing Safety Hardware (MASH). Refer to the CWZTCD List for approved end treatments and manufacturers.

BARRIER REFLECTORS FOR CONCRETE TRAFFIC BARRIER AND ATTENUATORS

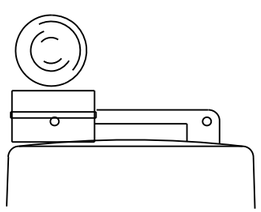

Type C Warning Light or approved substitute mounted on a drum adjacent to the travel way.

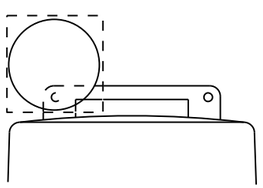

Warning reflector may be round or square.Must have a yellow reflective surface area of at least 30 square inches

WARNING LIGHTS

1. Warning lights shall meet the requirements of the TMUTCD.
2. Warning lights shall NOT be installed on barricades.
3. Type A-Low Intensity Flashing Warning Lights are commonly used with drums. They are intended to warn of or mark a potentially hazardous area. Their use shall be as indicated on this sheet and/or other sheets of the plans by the designation "FL". The Type A Warning Lights shall not be used with signs manufactured with Type B_{FL} or C_{FL} Sheeting meeting the requirements of Departmental Material Specification DMS-8300.
4. Type-C and Type D 360 degree Steady Burn Lights are intended to be used in a series for delineation to supplement other traffic control devices. Their use shall be as indicated on this sheet and/or other sheets of the plans by the designation "SB".
5. The Engineer/Inspector or the plans shall specify the location and type of warning lights to be installed on the traffic control devices.
6. When required by the Engineer, the Contractor shall furnish a copy of the warning lights certification. The warning light manufacturer will certify the warning lights meet the requirements of the latest ITE Purchase Specifications for Flashing and Steady-Burn Warning Lights.
7. When used to delineate curves, Type-C and Type D Steady Burn Lights should only be placed on the outside of the curve, not the inside.
8. The location of warning lights and warning reflectors on drums shall be as shown elsewhere in the plans.

WARNING LIGHTS MOUNTED ON PLASTIC DRUMS

1. Type A flashing warning lights are intended to warn drivers that they are approaching or are in a potentially hazardous area.
2. Type A random flashing warning lights are not intended for delineation and shall not be used in a series.
3. A series of sequential flashing warning lights placed on channelizing devices to form a merging taper may be used for delineation. If used, the successive flashing of the sequential warning lights should occur from the beginning of the taper to the end of the merging taper in order to identify the desired vehicle path. The rate of flashing for each light shall be 65 flashes per minute, plus or minus 10 flashes.
4. Type C and D steady-burn warning lights are intended to be used in a series to delineate the edge of the travel lane on detours, on lane changes, on lane closures, and on other similar conditions.
5. Type A, Type C and Type D warning lights shall be installed at locations as detailed on other sheets in the plans.
6. Warning lights shall not be installed on a drum that has a sign, chevron or vertical panel.
7. The maximum spacing for warning lights on drums should be identical to the channelizing device spacing.

WARNING REFLECTORS MOUNTED ON PLASTIC DRUMS AS A SUBSTITUTE FOR TYPE C (STEADY BURN) WARNING LIGHTS

1. A warning reflector or approved substitute may be mounted on a plastic drum as a substitute for a Type C, steady burn warning light at the discretion of the Contractor unless otherwise noted in the plans.
2. The warning reflector shall be yellow in color and shall be manufactured using a sign substrate approved for use with plastic drums listed on the CWZTCD.
3. The warning reflector shall have a minimum retroreflective surface area (one-side) of 30 square inches.
4. Round reflectors shall be fully reflectorized, including the area where attached to the drum.
5. Square substrates must have a minimum of 30 square inches of reflectorized sheeting. They do not have to be reflectorized where it attaches to the drum.
6. The side of the warning reflector facing approaching traffic shall have sheeting meeting the color and retroreflectivity requirements for DMS 8300-Type B or Type C.
7. When used near two-way traffic, both sides of the warning reflector shall be reflectorized.
8. The warning reflector should be mounted on the side of the handle nearest approaching traffic.
9. The maximum spacing for warning reflectors should be identical to the channelizing device spacing requirements.

Arrow Boards may be located behind channelizing devices in place for a shoulder taper or merging taper, otherwise they shall be delineated with four (4) channelizing devices placed perpendicular to traffic on the upstream side of traffic.

1. The Flashing Arrow Board should be used for all lane closures on multi-lane roadways, or slow moving maintenance or construction activities on the travel lanes.
2. Flashing Arrow Boards should not be used on two-lane, two-way roadways, detours, diversions or work on shoulders unless the "CAUTION" display (see detail below) is used.
3. The Engineer/Inspector shall choose all appropriate signs, barricades and/or other traffic control devices that should be used in conjunction with the Flashing Arrow Board.
4. The Flashing Arrow Board should be able to display the following symbols:

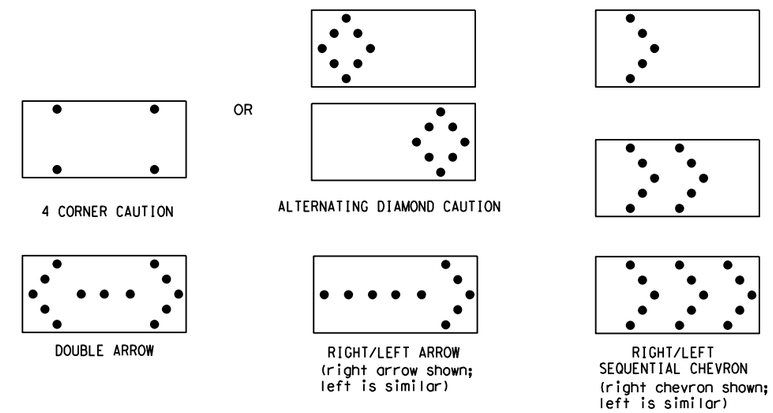

5. The "CAUTION" display consists of four corner lamps flashing simultaneously, or the Alternating Diamond Caution mode as shown.
6. The straight line caution display is NOT ALLOWED.
7. The Flashing Arrow Board shall be capable of minimum 50 percent dimming from rated lamp voltage. The flashing rate of the lamps shall not be less than 25 nor more than 40 flashes per minute.
8. Minimum lamp "on time" shall be approximately 50 percent for the flashing arrow and equal intervals of 25 percent for each sequential phase of the flashing chevron.
9. The sequential arrow display is NOT ALLOWED.
10. The flashing arrow display is the TxDOT standard; however, the sequential chevron display may be used during daylight operations.
11. The Flashing Arrow Board shall be mounted on a vehicle, trailer or other suitable support.
12. A Flashing Arrow Board SHALL NOT BE USED to laterally shift traffic.
13. A full matrix PCMS may be used to simulate a Flashing Arrow Board provided it meets visibility, flash rate and dimming requirements on this sheet for the same size arrow.
14. Minimum mounting height of trailer mounted Arrow Boards should be 7 feet from roadway to bottom of panel.

REQUIREMENTS			
TYPE	MINIMUM SIZE	MINIMUM NUMBER OF PANEL LAMPS	MINIMUM VISIBILITY DISTANCE
B	30 x 60	13	3/4 mile
C	48 x 96	15	1 mile

ATTENTION

Flashing Arrow Boards shall be equipped with automatic dimming devices.

WHEN NOT IN USE, REMOVE THE ARROW BOARD FROM THE RIGHT-OF-WAY OR PLACE THE ARROW BOARD BEHIND CONCRETE TRAFFIC BARRIER OR GUARDRAIL.

FLASHING ARROW BOARDS

TRUCK-MOUNTED ATTENUATORS

1. Truck-mounted attenuators (TMA) used on TxDOT facilities must meet the requirements outlined in the Manual for Assessing Safety Hardware (MASH).
2. Refer to the CWZTCD for the requirements of Level 2 or Level 3 TMAs.
3. Refer to the CWZTCD for a list of approved TMAs.
4. TMAs are required on freeways unless otherwise noted in the plans.
5. A TMA should be used anytime that it can be positioned 30 to 100 feet in advance of the area of crew exposure without adversely affecting the work performance.
6. The only reason a TMA should not be required is when a work area is spread down the roadway and the work crew is an extended distance from the TMA.

Texas Department of Transportation — Traffic Safety Division Standard

BARRICADE AND CONSTRUCTION ARROW PANEL, REFLECTORS, WARNING LIGHTS & ATTENUATOR

BC(7)-21

FILE: bc-21.dgn	DN: TxDOT	CK: TxDOT	DW: TxDOT	CK: TxDOT
© TxDOT November 2002	CONT	SECT	JOB	HIGHWAY
REVISIONS	0922	33	076	CS
9-07 8-14	DIST		COUNTY	SHEET NO.
7-13 5-21	LRD		WEBB	41

DISCLAIMER:
The use of this standard is governed by the "Texas Engineering Practice Act". No warranty of any kind is made by TxDOT for any purpose whatsoever. TxDOT assumes no responsibility for the conversion of this standard to other formats or for incorrect results or damages resulting from its use.

DATE:
FILE:

DISCLAIMER:
The use of this standard is governed by the "Texas Engineering Practice Act". No warranty of any kind is made by TxDOT for any purpose whatsoever. TxDOT assumes no responsibility for the conversion of this standard to other formats or for incorrect results or damages resulting from its use.

GENERAL NOTES

1. For long term stationary work zones on freeways, drums shall be used as the primary channelizing device.
2. For intermediate term stationary work zones on freeways, drums should be used as the primary channelizing device but may be replaced in tangent sections by vertical panels, or 42" two-piece cones. In tangent sections, one-piece cones may be used with the approval of the Engineer but only if personnel are present on the project at all times to maintain the cones in proper position and location.
3. For short term stationary work zones on freeways, drums are the preferred channelizing device but may be replaced in tapers, transitions and tangent sections by vertical panels, two-piece cones or one-piece cones as approved by the Engineer.
4. Drums and all related items shall comply with the requirements of the current version of the "Texas Manual on Uniform Traffic Control Devices" (TMUTCD) and the "Compliant Work Zone Traffic Control Devices List" (CWZTCD).
5. Drums, bases, and related materials shall exhibit good workmanship and shall be free from objectionable marks or defects that would adversely affect their appearance or serviceability.
6. The Contractor shall have a maximum of 24 hours to replace any plastic drums identified for replacement by the Engineer/Inspector. The replacement device must be an approved device.

GENERAL DESIGN REQUIREMENTS

Pre-qualified plastic drums shall meet the following requirements:

1. Plastic drums shall be a two-piece design; the "body" of the drum shall be the top portion and the "base" shall be the bottom.
2. The body and base shall lock together in such a manner that the body separates from the base when impacted by a vehicle traveling at a speed of 20 MPH or greater but prevents accidental separation due to normal handling and/or air turbulence created by passing vehicles.
3. Plastic drums shall be constructed of lightweight flexible, and deformable materials. The Contractor shall NOT use metal drums or single piece plastic drums as channelization devices or sign supports.
4. Drums shall present a profile that is a minimum of 18 inches in width at the 36 inch height when viewed from any direction. The height of drum unit (body installed on base) shall be a minimum of 36 inches and a maximum of 42 inches.
5. The top of the drum shall have a built-in handle for easy pickup and shall be designed to drain water and not collect debris. The handle shall have a minimum of two widely spaced 9/16 inch diameter holes to allow attachment of a warning light, warning reflector unit or approved compliant sign.
6. The exterior of the drum body shall have a minimum of four alternating orange and white retroreflective circumferential stripes not less than 4 inches nor greater than 8 inches in width. Any non-reflectorized space between any two adjacent stripes shall not exceed 2 inches in width.
7. Bases shall have a maximum width of 36 inches, a maximum height of 4 inches, and a minimum of two footholds of sufficient size to allow base to be held down while separating the drum body from the base.
8. Plastic drums shall be constructed of ultra-violet stabilized, orange, high-density polyethylene (HDPE) or other approved material.
9. Drum body shall have a maximum unballasted weight of 11 lbs.
10. Drum and base shall be marked with manufacturer's name and model number.

RETROREFLECTIVE SHEETING

1. The stripes used on drums shall be constructed of sheeting meeting the color and retroreflectivity requirements of Departmental Materials Specification DMS-8300, "Sign Face Materials," Type A or Type B reflective sheeting shall be supplied unless otherwise specified in the plans.
2. The sheeting shall be suitable for use on and shall adhere to the drum surface such that, upon vehicular impact, the sheeting shall remain adhered in-place and exhibit no delaminating, cracking, or loss of retroreflectivity other than that loss due to abrasion of the sheeting surface.

BALLAST

1. Unballasted bases shall be large enough to hold up to 50 lbs. of sand. This base, when filled with the ballast material, should weigh between 35 lbs (minimum) and 50 lbs (maximum). The ballast may be sand in one to three sandbags separate from the base, sand in a sand-filled plastic base, or other ballasting devices as approved by the Engineer. Stacking of sandbags will be allowed, however height of sandbags above pavement surface may not exceed 12 inches.
2. Bases with built-in ballast shall weigh between 40 lbs. and 50 lbs. Built-in ballast can be constructed of an integral crumb rubber base or a solid rubber base.
3. Recycled truck tire sidewalls may be used for ballast on drums approved for this type of ballast on the CWZTCD list.
4. The ballast shall not be heavy objects, water, or any material that would become hazardous to motorists, pedestrians, or workers when the drum is struck by a vehicle.
5. When used in regions susceptible to freezing, drums shall have drainage holes in the bottoms so that water will not collect and freeze becoming a hazard when struck by a vehicle.
6. Ballast shall not be placed on top of drums.
7. Adhesives may be used to secure base of drums to pavement.

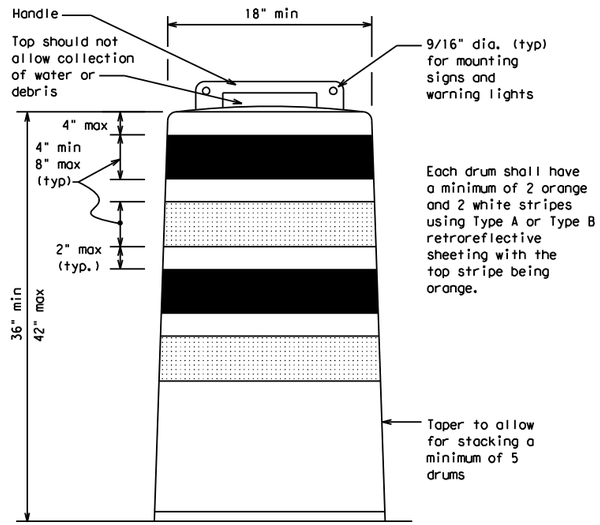

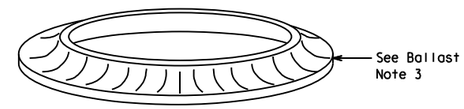

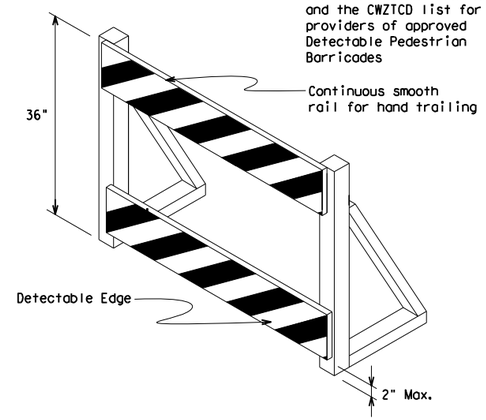

DETECTABLE PEDESTRIAN BARRICADES

1. When existing pedestrian facilities are disrupted, closed, or relocated in a TTC zone, the temporary facilities shall be detectable and include accessibility features consistent with the features present in the existing pedestrian facility. Refer to WZ(BTS-2) for Pedestrian Control requirements for Sidewalk Diversions, Sidewalk Detours and Crosswalk Closures.
2. Where pedestrians with visual disabilities normally use the closed sidewalk, a Detectable Pedestrian Barricade shall be placed across the full width of the closed sidewalk instead of a Type 3 Barricade.
3. Detectable pedestrian barricades similar to the one pictured above, longitudinal channelizing devices, some concrete barriers, and wood or chain link fencing with a continuous detectable edging can satisfactorily delineate a pedestrian path.
4. Tape, rope, or plastic chain strung between devices are not detectable, do not comply with the design standards in the "Americans with Disabilities Act Accessibility Guidelines (ADAAG)" and should not be used as a control for pedestrian movements.
5. Warning lights shall not be attached to detectable pedestrian barricades.
6. Detectable pedestrian barricades should use 8" nominal barricade rails as shown on BC(10) provided that the top rail provides a smooth continuous rail suitable for hand trailing with no splinters, burrs, or sharp edges.

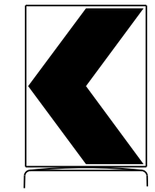

18" x 24" Sign
(Maximum Sign Dimension)
Chevron CW1-8, Opposing Traffic Lane Divider, Driveway sign D70a, Keep Right R4 series or other signs as approved by Engineer

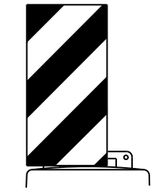

12" x 24"
Vertical Panel
mount with diagonals sloping down towards travel way

Plywood, Aluminum or Metal sign substrates shall NOT be used on plastic drums

SIGNS, CHEVRONS, AND VERTICAL PANELS MOUNTED ON PLASTIC DRUMS

1. Signs used on plastic drums shall be manufactured using substrates listed on the CWZTCD.
2. Chevrons and other work zone signs with an orange background shall be manufactured with Type B_{FL} or Type C_{FL} Orange sheeting meeting the color and retroreflectivity requirements of DMS-8300, "Sign Face Material," unless otherwise specified in the plans.
3. Vertical Panels shall be manufactured with orange and white sheeting meeting the requirements of DMS-8300 Type A or Type B. Diagonal stripes on Vertical Panels shall slope down toward the intended traveled lane.
4. Other sign messages (text or symbolic) may be used as approved by the Engineer. Sign dimensions shall not exceed 18 inches in width or 24 inches in height, except for the R9 series signs discussed in note 8 below.
5. Signs shall be installed using a 1/2 inch bolt (nominal) and nut, two washers, and one locking washer for each connection.
6. Mounting bolts and nuts shall be fully engaged and adequately torqued. Bolts should not extend more than 1/2 inch beyond nuts.
7. Chevrons may be placed on drums on the outside of curves, on merging tapers or on shifting tapers. When used in these locations, they may be placed on every drum or spaced not more than on every third drum. A minimum of three (3) should be used at each location called for in the plans.
8. R9-9, R9-10, R9-11 and R9-11a Sidewalk Closed signs which are 24 inches wide may be mounted on plastic drums, with approval of the Engineer.

Texas Department of Transportation — Traffic Safety Division Standard

BARRICADE AND CONSTRUCTION CHANNELIZING DEVICES

BC(8)-21

FILE: bc-21.dgn	DN: TxDOT	CK: TxDOT	DW: TxDOT	CK: TxDOT
©TxDOT November 2002	CONT	SECT	JOB	HIGHWAY
REVISIONS	0922	33	076	CS
4-03 8-14	DIST	COUNTY		SHEET NO.
9-07 5-21	LRD	WEBB		42
7-13				

DATE:
FILE:

DISCLAIMER:
The use of this standard is governed by the "Texas Engineering Practice Act". No warranty of any kind is made by TxDOT for any purpose whatsoever. TxDOT assumes no responsibility for the conversion of this standard to other formats or for incorrect results or damages resulting from its use.

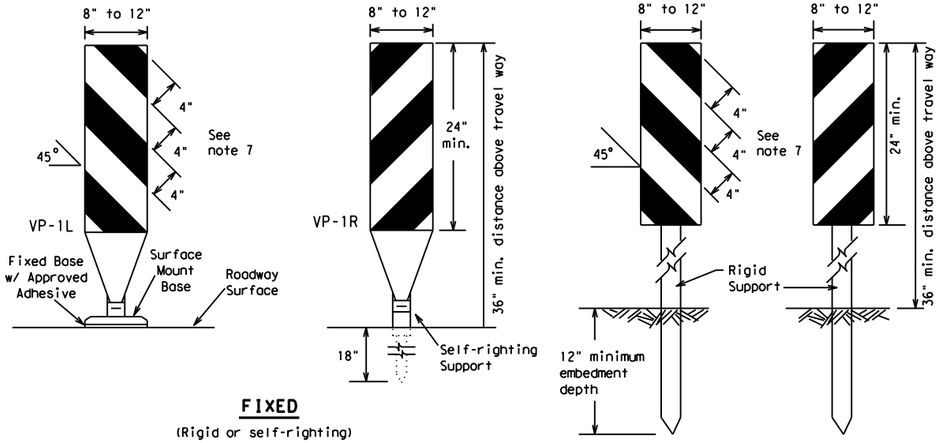

FIXED

(Rigid or self-righting)

DRIVEABLE

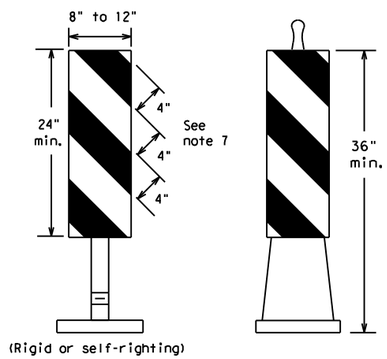

(Rigid or self-righting)

PORTABLE

1. Vertical Panels (VP's) are normally used to channelize traffic or divide opposing lanes of traffic.
2. VP's may be used in daytime or nighttime situations. They may be used at the edge of shoulder drop-offs and other areas such as lane transitions where positive daytime and nighttime delineation is required. The Engineer/Inspector shall refer to the Roadway Design Manual for additional requirements on the use VP's for drop-offs.
3. VP's should be mounted back to back if used at the edge of cuts adjacent to two-way two lane roadways. Stripes are to be reflective orange and reflective white and should always slope downward toward the travel lane.
4. VP's used on expressways and freeways or other high speed roadways, may have more than 270 square inches of retroreflective area facing traffic.
5. Self-righting supports are available with portable base. See "Compliant Work Zone Traffic Control Devices List" (CWZTCD).
6. Sheeting for the VP's shall be retroreflective Type A or Type B conforming to Departmental Material Specification DMS-8300, unless noted otherwise.
7. Where the height of reflective material on the vertical panel is 36 inches or greater, a panel stripe of 6 inches shall be used.

VERTICAL PANELS (VPs)

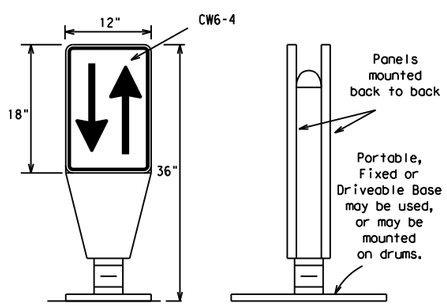

1. Opposing Traffic Lane Dividers (OTLD) are delineation devices designed to convert a normal one-way roadway section to two-way operation. OTLD's are used on temporary centerlines. The upward and downward arrows on the sign's face indicate the direction of traffic on either side of the divider. The base is secured to the pavement with an adhesive or rubber weight to minimize movement caused by a vehicle impact or wind gust.
2. The OTLD may be used in combination with 42" cones or VPs.
3. Spacing between the OTLD shall not exceed 500 feet. 42" cones or VPs placed between the OTLD's should not exceed 100 foot spacing.
4. The OTLD shall be orange with a black non-reflective legend. Sheeting for the OTLD shall be retroreflective Type B_{FL} or Type C_{FL} conforming to Departmental Material Specification DMS-8300, unless noted otherwise. The legend shall meet the requirements of DMS-8300.

OPPOSING TRAFFIC LANE DIVIDERS (OTLD)

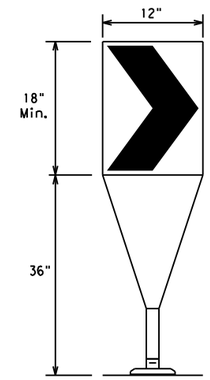

Fixed Base w/ Approved Adhesive (Driveable Base, or Flexible Support can be used)

1. The chevron shall be a vertical rectangle with a minimum size of 12 by 18 inches.
2. Chevrons are intended to give notice of a sharp change of alignment with the direction of travel and provide additional emphasis and guidance for vehicle operators with regard to changes in horizontal alignment of the roadway.
3. Chevrons, when used, shall be erected on the outside of a sharp curve or turn, or on the far side of an intersection. They shall be in line with and at right angles to approaching traffic. Spacing should be such that the motorist always has three in view, until the change in alignment eliminates its need.
4. To be effective, the chevron should be visible for at least 500 feet.
5. Chevrons shall be orange with a black nonreflective legend. Sheeting for the chevron shall be retroreflective Type B_{FL} or Type C_{FL} conforming to Departmental Material Specification DMS-8300, unless noted otherwise. The legend shall meet the requirements of DMS-8300.
6. For Long Term Stationary use on tapers or transitions on freeways and divided highways, self-righting chevrons may be used to supplement plastic drums but not to replace plastic drums.

CHEVRONS

GENERAL NOTES

1. Work Zone channelizing devices illustrated on this sheet may be installed in close proximity to traffic and are suitable for use on high or low speed roadways. The Engineer/Inspector shall ensure that spacing and placement is uniform and in accordance with the "Texas Manual on Uniform Traffic Control Devices" (TMUTCD).
2. Channelizing devices shown on this sheet may have a driveable, fixed or portable base. The requirement for self-righting channelizing devices must be specified in the General Notes or other plan sheets.
3. Channelizing devices on self-righting supports should be used in work zone areas where channelizing devices are frequently impacted by errant vehicles or vehicle related wind gusts making alignment of the channelizing devices difficult to maintain. Locations of these devices shall be detailed elsewhere in the plans. These devices shall conform to the TMUTCD and the "Compliant Work Zone Traffic Control Devices List" (CWZTCD).
4. The Contractor shall maintain devices in a clean condition and replace damaged, nonreflective, faded, or broken devices and bases as required by the Engineer/Inspector. The Contractor shall be required to maintain proper device spacing and alignment.
5. Portable bases shall be fabricated from virgin and/or recycled rubber. The portable bases shall weigh a minimum of 30 lbs.
6. Pavement surfaces shall be prepared in a manner that ensures proper bonding between the adhesives, the fixed mount bases and the pavement surface. Adhesives shall be prepared and applied according to the manufacturer's recommendations.
7. The installation and removal of channelizing devices shall not cause detrimental effects to the final pavement surfaces, including pavement surface discoloration or surface integrity. Driveable bases shall not be permitted on final pavement surfaces. The Engineer/Inspector shall approve all application and removal procedures of fixed bases.

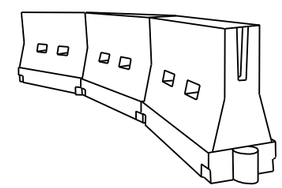

LONGITUDINAL CHANNELIZING DEVICES (LCD)

1. LCDs are crashworthy, lightweight, deformable devices that are highly visible, have good target value and can be connected together. They are not designed to contain or redirect a vehicle on impact.
2. LCDs may be used instead of a line of cones or drums.
3. LCDs shall be placed in accordance to application and installation requirements specific to the device, and used only when shown on the CWZTCD list.
4. LCDs should not be used to provide positive protection for obstacles, pedestrians or workers.
5. LCDs shall be supplemented with retroreflective delineation as required for temporary barriers on BC(7) when placed roughly parallel to the travel lanes.
6. LCDs used as barricades placed perpendicular to traffic should have at least one row of reflective sheeting meeting the requirements for barricade rails as shown on BC(10). Place reflective sheeting near the top of the LCD along the full length of the device.

WATER BALLASTED SYSTEMS USED AS BARRIERS

1. Water ballasted systems used as barriers shall not be used solely to channelize road users, but also to protect the work space per the appropriate Manual for Assessing Safety Hardware (MASH) crashworthiness requirements based on roadway speed and barrier application.
2. Water ballasted systems used to channelize vehicular traffic shall be supplemented with retroreflective delineation or channelizing devices to improve daytime/nighttime visibility. They may also be supplemented with pavement markings.
3. Water ballasted systems used as barriers shall be placed in accordance to application and installation requirements specific to the device, and used only when shown on the CWZTCD list.
4. Water ballasted systems used as barriers should not be used for a merging taper except in low speed (less than 45 MPH) urban areas. When used on a taper in a low speed urban area, the taper shall be delineated and the taper length should be designed to optimize road user operations considering the available geometric conditions.
5. When water ballasted systems used as barriers have blunt ends exposed to traffic, they should be attenuated as per manufacturer recommendations or flared to a point outside the clear zone.

If used to channelize pedestrians, longitudinal channelizing devices or water ballasted systems must have a continuous detectable bottom for users of long canes and the top of the unit shall not be less than 32 inches in height.

HOLLOW OR WATER BALLASTED SYSTEMS USED AS LONGITUDINAL CHANNELIZING DEVICES OR BARRIERS

Posted Speed	Formula	Minimum Desirable Taper Lengths ** 10' Offset	11' Offset	12' Offset	Suggested Maximum Spacing of Channelizing Devices On a Taper	On a Tangent
30	$L = \frac{WS^2}{60}$	150'	165'	180'	30'	60'
35		205'	225'	245'	35'	70'
40		265'	295'	320'	40'	80'
45	L = WS	450'	495'	540'	45'	90'
50		500'	550'	600'	50'	100'
55		550'	605'	660'	55'	110'
60		600'	660'	720'	60'	120'
65		650'	715'	780'	65'	130'
70		700'	770'	840'	70'	140'
75		750'	825'	900'	75'	150'
80		800'	880'	960'	80'	160'

** Taper lengths have been rounded off.
L=Length of Taper (FT.) W=Width of Offset (FT.)
S=Posted Speed (MPH)

SUGGESTED MAXIMUM SPACING OF CHANNELIZING DEVICES AND MINIMUM DESIRABLE TAPER LENGTHS

Texas Department of Transportation — Traffic Safety Division Standard

BARRICADE AND CONSTRUCTION CHANNELIZING DEVICES

BC(9)-21

FILE: bc-21.dgn	DN: TxDOT	CK: TxDOT	DW: TxDOT	CK: TxDOT
© TxDOT November 2002	CONT	SECT	JOB	HIGHWAY
REVISIONS	0922	33	076	CS
9-07 8-14	DIST		COUNTY	SHEET NO.
7-13 5-21	LRD		WEBB	43

DATE:
FILE:

DISCLAIMER:
The use of this standard is governed by the "Texas Engineering Practice Act". No warranty of any kind is made by TxDOT for any purpose whatsoever. TxDOT assumes no responsibility for the conversion of this standard to other formats or for incorrect results or damages resulting from its use.

TYPE 3 BARRICADES

1. Refer to the Compliant Work Zone Traffic Control Devices List (CWZTCD) for details of the Type 3 Barricades and a list of all materials used in the construction of Type 3 Barricades.
2. Type 3 Barricades shall be used at each end of construction projects closed to all traffic.
3. Barricades extending across a roadway should have stripes that slope downward in the direction toward which traffic must turn in detouring. When both right and left turns are provided, the chevron striping may slope downward in both directions from the center of the barricade. Where no turns are provided at a closed road, striping should slope downward in both directions toward the center of roadway.
4. Striping of rails, for the right side of the roadway, should slope downward to the left. For the left side of the roadway, striping should slope downward to the right.
5. Identification markings may be shown only on the back of the barricade rails. The maximum height of letters and/or company logos used for identification shall be 1".
6. Barricades shall not be placed parallel to traffic unless an adequate clear zone is provided.
7. Warning lights shall NOT be installed on barricades.
8. Where barricades require the use of weights to keep from turning over, the use of sandbags with dry, cohesionless sand is recommended. The sandbags will be tied shut to keep the sand from spilling and to maintain a constant weight. Sand bags shall not be stacked in a manner that covers any portion of a barricade rails reflective sheeting. Rock, concrete, iron, steel or other solid objects will NOT be permitted. Sandbags should weigh a minimum of 35 lbs and a maximum of 50 lbs. Sandbags shall be made of a durable material that tears upon vehicular impact. Rubber (such as tire inner tubes) shall not be used for sandbags. Sandbags shall only be placed along or upon the base supports of the device and shall not be suspended above ground level or hung with rope, wire, chains or other fasteners.
9. Sheeting for barricades shall be retroreflective Type A or Type B conforming to Departmental Material Specification DMS-8300 unless otherwise noted.

Barricades shall NOT be used as a sign support.

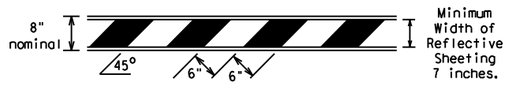

TYPICAL STRIPING DETAIL FOR BARRICADE RAIL

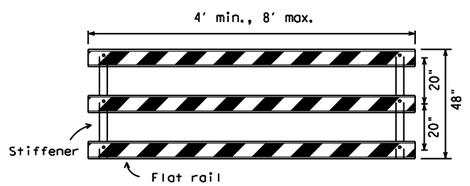

Stiffener may be inside or outside of support, but no more than 2 stiffeners shall be allowed on one barricade.

TYPICAL PANEL DETAIL FOR SKID OR POST TYPE BARRICADES

Each roadway of a divided highway shall be barricaded in the same manner.

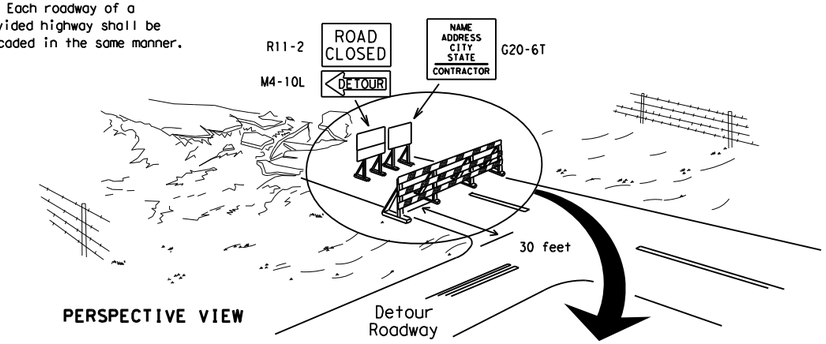

PERSPECTIVE VIEW

The three rails on Type 3 barricades shall be reflectorized orange and reflective white stripes on one side facing one-way traffic and both sides for two-way traffic.
Barricade striping should slant downward in the direction of detour.

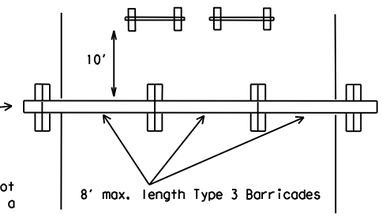

PLAN VIEW

1. Signs should be mounted on independent supports at a 7 foot mounting height in center of roadway. The signs should be a minimum of 10 feet behind Type 3 Barricades.
2. Advance signing shall be as specified elsewhere in the plans.

TYPE 3 BARRICADE (POST AND SKID) TYPICAL APPLICATION

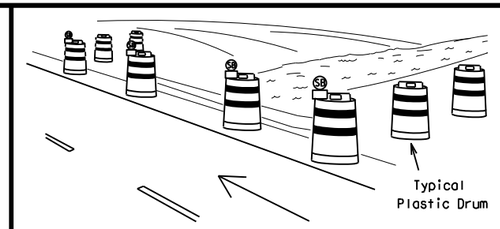

PERSPECTIVE VIEW

1. Where positive redirectional capability is provided, drums may be omitted.
2. Plastic construction fencing may be used with drums for safety as required in the plans.
3. Vertical Panels on flexible support may be substituted for drums when the shoulder width is less than 4 feet.
4. When the shoulder width is greater than 12 feet, steady-burn lights may be omitted if drums are used.
5. Drums must extend the length of the culvert widening.

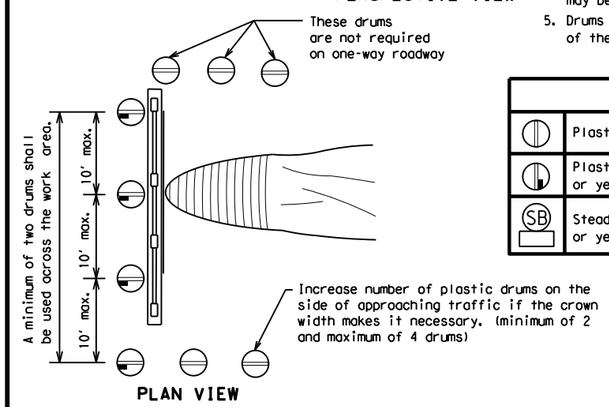

PLAN VIEW

LEGEND	
	Plastic drum
	Plastic drum with steady burn light or yellow warning reflector
SB	Steady burn warning light or yellow warning reflector

CULVERT WIDENING OR OTHER ISOLATED WORK WITHIN THE PROJECT LIMITS

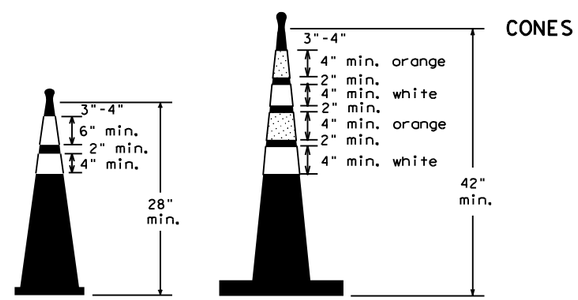

Two-Piece cones

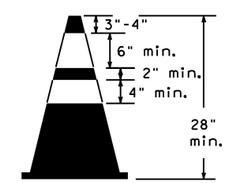

One-Piece cones

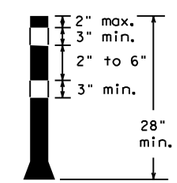

Tubular Marker

28" Cones shall have a minimum weight of 9 1/2 lbs.

42" 2-piece cones shall have a minimum weight of 30 lbs. including base.

1. Traffic cones and tubular markers shall be predominantly orange, and meet the height and weight requirements shown above.
2. One-piece cones have the body and base of the cone molded in one consolidated unit. Two-piece cones have a cone shaped body and a separate rubber base, or ballast, that is added to keep the device upright and in place.
3. Two-piece cones may have a handle or loop extending up to 8" above the minimum height shown, in order to aid in retrieving the device.
4. Cones or tubular markers shall have white or white and orange reflective bands as shown above. The reflective bands shall have a smooth, sealed outer surface and meet the requirements of Departmental Material Specification DMS-8300 Type A or Type B.
5. 28" cones and tubular markers are generally suitable for short duration and short-term stationary work as defined on BC(4). These should not be used for intermediate-term or long-term stationary work unless personnel is on-site to maintain them in their proper upright position.
6. 42" two-piece cones, vertical panels or drums are suitable for all work zone durations.
7. Cones or tubular markers used on each project should be of the same size and shape.

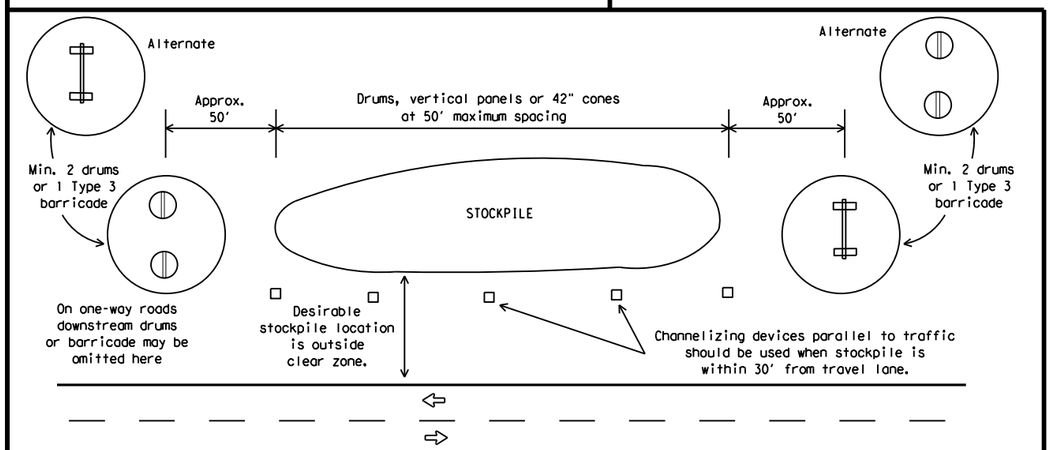

TRAFFIC CONTROL FOR MATERIAL STOCKPILES

SHEET 10 OF 12

Texas Department of Transportation — Traffic Safety Division Standard

BARRICADE AND CONSTRUCTION CHANNELIZING DEVICES

BC(10)-21

FILE: bc-21.dgn	DN: TxDOT	CK: TxDOT	DW: TxDOT	CK: TxDOT
© TxDOT November 2002	CONT	SECT	JOB	HIGHWAY
REVISIONS	0922	33	076	CS
9-07 8-14	DIST		COUNTY	SHEET NO.
7-13 5-21	LRD		WEBB	44

DATE:
FILE:

104

DISCLAIMER:
The use of this standard is governed by the "Texas Engineering Practice Act". No warranty of any kind is made by TxDOT for any purpose whatsoever. TxDOT assumes no responsibility for the conversion of this standard to other formats or for incorrect results or damages resulting from its use.

WORK ZONE PAVEMENT MARKINGS

GENERAL

1. The Contractor shall be responsible for maintaining work zone and existing pavement markings, in accordance with the standard specifications and special provisions, on all roadways open to traffic within the CSJ limits unless otherwise stated in the plans.
2. Color, patterns and dimensions shall be in conformance with the "Texas Manual on Uniform Traffic Control Devices" (TMUTCD).
3. Additional supplemental pavement marking details may be found in the plans or specifications.
4. Pavement markings shall be installed in accordance with the TMUTCD and as shown on the plans.
5. When short term markings are required on the plans, short term markings shall conform with the TMUTCD, the plans and details as shown on the Standard Plan Sheet WZ(STPM).
6. When standard pavement markings are not in place and the roadway is opened to traffic, DO NOT PASS signs shall be erected to mark the beginning of the sections where passing is prohibited and PASS WITH CARE signs at the beginning of sections where passing is permitted.
7. All work zone pavement markings shall be installed in accordance with Item 662, "Work Zone Pavement Markings."

RAISED PAVEMENT MARKERS

1. Raised pavement markers are to be placed according to the patterns on BC(12).
2. All raised pavement markers used for work zone markings shall meet the requirements of Item 672, "RAISED PAVEMENT MARKERS" and Departmental Material Specification DMS-4200 or DMS-4300.

PREFABRICATED PAVEMENT MARKINGS

1. Removable prefabricated pavement markings shall meet the requirements of DMS-8241.
2. Non-removable prefabricated pavement markings (foil back) shall meet the requirements of DMS-8240.

MAINTAINING WORK ZONE PAVEMENT MARKINGS

1. The Contractor will be responsible for maintaining work zone pavement markings within the work limits.
2. Work zone pavement markings shall be inspected in accordance with the frequency and reporting requirements of work zone traffic control device inspections as required by Form 599.
3. The markings should provide a visible reference for a minimum distance of 300 feet during normal daylight hours and 160 feet when illuminated by automobile low-beam headlights at night, unless sight distance is restricted by roadway geometrics.
4. Markings failing to meet this criteria within the first 30 days after placement shall be replaced at the expense of the Contractor as per Specification Item 662.

REMOVAL OF PAVEMENT MARKINGS

1. Pavement markings that are no longer applicable, could create confusion or direct a motorist toward or into the closed portion of the roadway shall be removed or obliterated before the roadway is opened to traffic.
2. The above shall not apply to detours in place for less than three days, where flaggers and/or sufficient channelizing devices are used in lieu of markings to outline the detour route.
3. Pavement markings shall be removed to the fullest extent possible, so as not to leave a discernable marking. This shall be by any method approved by TxDOT Specification Item 677 for "Eliminating Existing Pavement Markings and Markers".
4. The removal of pavement markings may require resurfacing or seal coating portions of the roadway as described in Item 677.
5. Subject to the approval of the Engineer, any method that proves to be successful on a particular type pavement may be used.
6. Blast cleaning may be used but will not be required unless specifically shown in the plans.
7. Over-painting of the markings SHALL NOT BE permitted.
8. Removal of raised pavement markers shall be as directed by the Engineer.
9. Removal of existing pavement markings and markers will be paid for directly in accordance with Item 677, "ELIMINATING EXISTING PAVEMENT MARKINGS AND MARKERS," unless otherwise stated in the plans.
10. Black-out marking tape may be used to cover conflicting existing markings for periods less than two weeks when approved by the Engineer.

Temporary Flexible-Reflective Roadway Marker Tabs

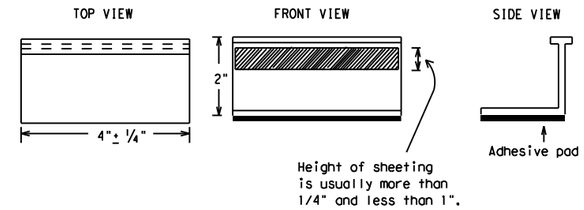

STAPLES OR NAILS SHALL NOT BE USED TO SECURE TEMPORARY FLEXIBLE-REFLECTIVE ROADWAY MARKER TABS TO THE PAVEMENT SURFACE

1. Temporary flexible-reflective roadway marker tabs used as guidemarks shall meet the requirements of DMS-8242.
2. Tabs detailed on this sheet are to be inspected and accepted by the Engineer or designated representative. Sampling and testing is not normally required, however at the option of the Engineer, either "A" or "B" below may be imposed to assure quality before placement on the roadway.
   A. Select five (5) or more tabs at random from each lot or shipment and submit to the Construction Division, Materials and Pavement Section to determine specification compliance.
   B. Select five (5) tabs and perform the following test. Affix five (5) tabs at 24 inch intervals on an asphaltic pavement in a straight line. Using a medium size passenger vehicle or pickup, run over the markers with the front and rear tires at a speed of 35 to 40 miles per hour, four (4) times in each direction. No more than one (1) out of the five (5) reflective surfaces shall be lost or displaced as a result of this test.
3. Small design variances may be noted between tab manufacturers.
4. See Standard Sheet WZ(STPM) for tab placement on new pavements. See Standard Sheet TCP(7-1) for tab placement on seal coat work.

RAISED PAVEMENT MARKERS USED AS GUIDEMARKS

1. Raised pavement markers used as guidemarks shall be from the approved product list, and meet the requirements of DMS-4200.
2. All temporary construction raised pavement markers provided on a project shall be of the same manufacturer.
3. Adhesive for guidemarks shall be bituminous material hot applied or butyl rubber pad for all surfaces, or thermoplastic for concrete surfaces.

Guidemarks shall be designated as:
YELLOW - (two amber reflective surfaces with yellow body).
WHITE - (one silver reflective surface with white body).

DEPARTMENTAL MATERIAL SPECIFICATIONS	
PAVEMENT MARKERS (REFLECTORIZED)	DMS-4200
TRAFFIC BUTTONS	DMS-4300
EPOXY AND ADHESIVES	DMS-6100
BITUMINOUS ADHESIVE FOR PAVEMENT MARKERS	DMS-6130
PERMANENT PREFABRICATED PAVEMENT MARKINGS	DMS-8240
TEMPORARY REMOVABLE, PREFABRICATED PAVEMENT MARKINGS	DMS-8241
TEMPORARY FLEXIBLE, REFLECTIVE ROADWAY MARKER TABS	DMS-8242

A list of prequalified reflective raised pavement markers, non-reflective traffic buttons, roadway marker tabs and other pavement markings can be found at the Material Producer List web address shown on BC(1).

Texas Department of Transportation — Traffic Safety Division Standard

BARRICADE AND CONSTRUCTION PAVEMENT MARKINGS

BC(11)-21

FILE: bc-21.dgn	DN: TxDOT	CK: TxDOT	DW: TxDOT	CK: TxDOT
© TxDOT February 1998	CONT	SECT	JOB	HIGHWAY
REVISIONS 2-98 9-07 5-21	0922	33	076	CS
1-02 7-13	DIST		COUNTY	SHEET NO.
11-02 8-14	LRD		WEBB	45

DATE:
FILE:

PAVEMENT MARKING PATTERNS

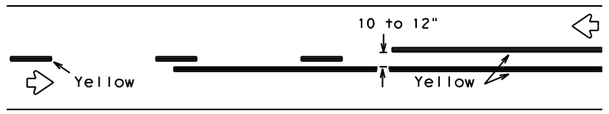

REFLECTORIZED PAVEMENT MARKINGS - PATTERN A

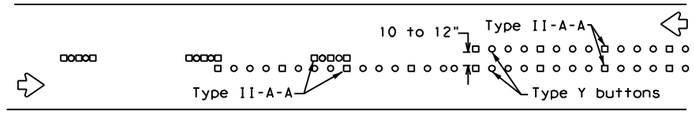

RAISED PAVEMENT MARKERS - PATTERN A

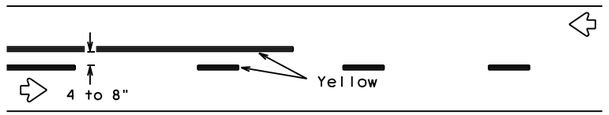

REFLECTORIZED PAVEMENT MARKINGS - PATTERN B

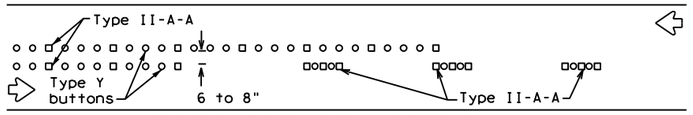

RAISED PAVEMENT MARKERS - PATTERN B

Pattern A is the TXDOT Standard, however Pattern B may be used if approved by the Engineer.
Prefabricated markings may be substituted for reflectorized pavement markings.

CENTER LINE & NO-PASSING ZONE BARRIER LINES FOR TWO-LANE, TWO-WAY HIGHWAYS

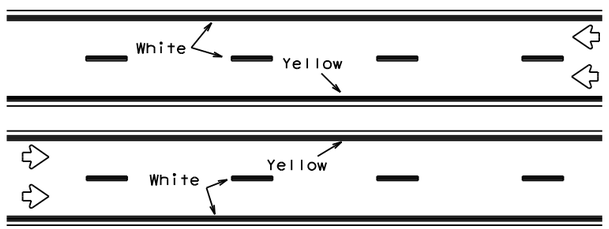

REFLECTORIZED PAVEMENT MARKINGS

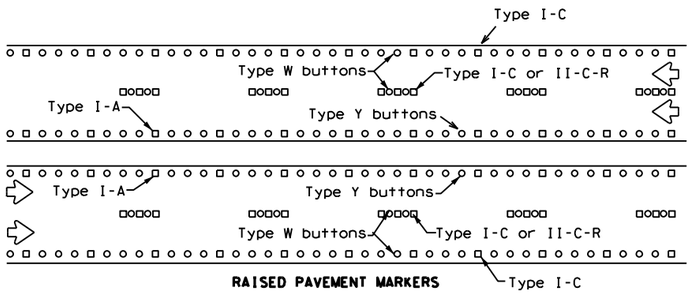

RAISED PAVEMENT MARKERS

Prefabricated markings may be substituted for reflectorized pavement markings.

EDGE & LANE LINES FOR DIVIDED HIGHWAY

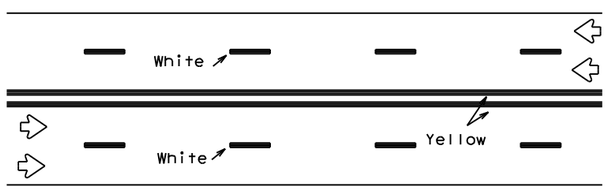

REFLECTORIZED PAVEMENT MARKINGS

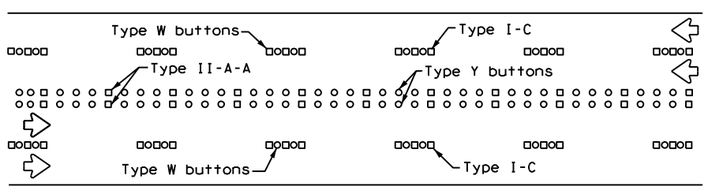

RAISED PAVEMENT MARKERS

Prefabricated markings may be substituted for reflectorized pavement markings.

LANE & CENTER LINES FOR MULTILANE UNDIVIDED HIGHWAYS

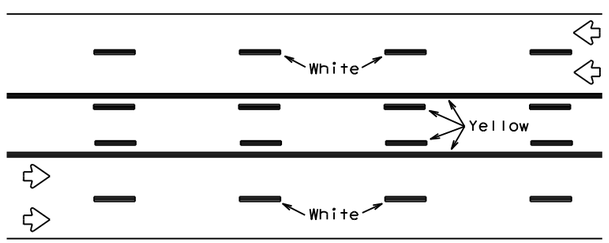

REFLECTORIZED PAVEMENT MARKINGS

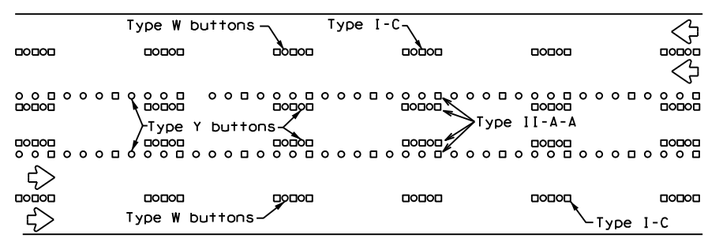

RAISED PAVEMENT MARKERS

Prefabricated markings may be substituted for reflectorized pavement markings.

TWO-WAY LEFT TURN LANE

STANDARD WORK ZONE PAVEMENT MARKINGS DETAILS

SOLID LINES

DOUBLE NO-PASSING LINE

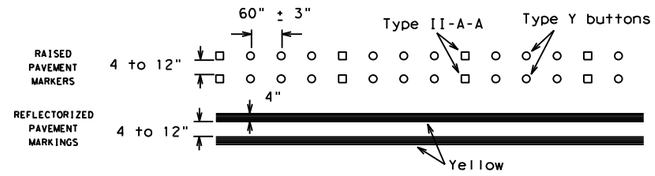

EDGE LINE OR SINGLE NO-PASSING LINE

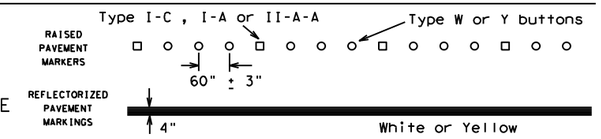

WIDE LINE

(FOR LEFT TURN CHANNELIZING LINE OR CHANNELIZING LINE USED TO DISCOURAGE LANE CHANGING.)

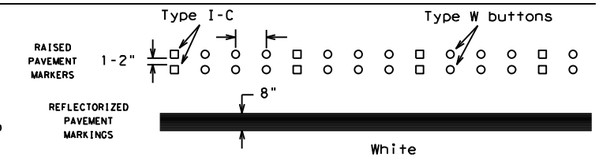

BROKEN LINES

CENTER LINE OR LANE LINE

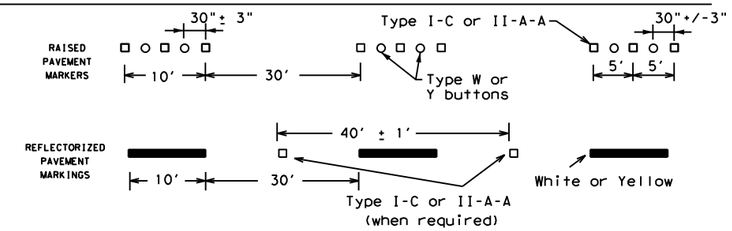

AUXILIARY OR LANEDROP LINE

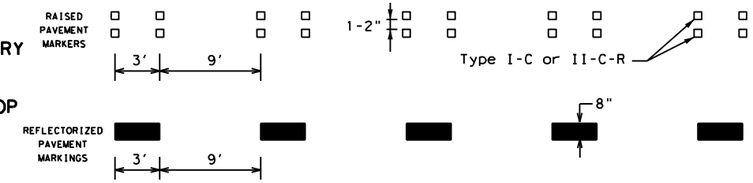

REMOVABLE MARKINGS WITH RAISED PAVEMENT MARKERS

If raised pavement markers are used to supplement REMOVABLE markings, the markers shall be applied to the top of the tape at the approximate mid length of tape used for broken lines or at 20 foot spacing for solid lines. This allows an easier removal of raised pavement markers and tape.

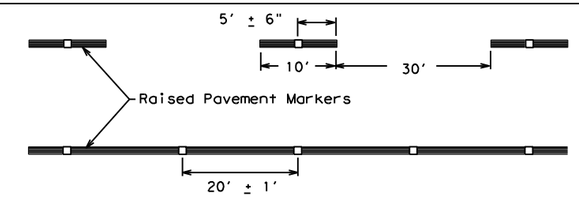

Centerline only - not to be used on edge lines

Raised pavement markers used as standard pavement markings shall be from the approved products list and meet the requirements of Item 672 "RAISED PAVEMENT MARKERS."

SHEET 12 OF 12

Texas Department of Transportation — Traffic Safety Division Standard

BARRICADE AND CONSTRUCTION PAVEMENT MARKING PATTERNS

BC(12)-21

FILE: bc-21.dgn	DN: TxDOT	CK: TxDOT	DW: TxDOT	CK: TxDOT
© TxDOT February 1998	CONT	SECT	JOB	HIGHWAY
REVISIONS 1-97 9-07 5-21 2-98 7-13 11-02 8-14	0922	33	076	CS
	DIST		COUNTY	SHEET NO.
	LRD		WEBB	46

106

DISCLAIMER:
The use of this standard is governed by the "Texas Engineering Practice Act". No warranty of any kind is made by TxDOT for any purpose whatsoever. TxDOT assumes no responsibility for the conversion of this standard to other formats or for incorrect results or damages resulting from its use.

DATE:
FILE:

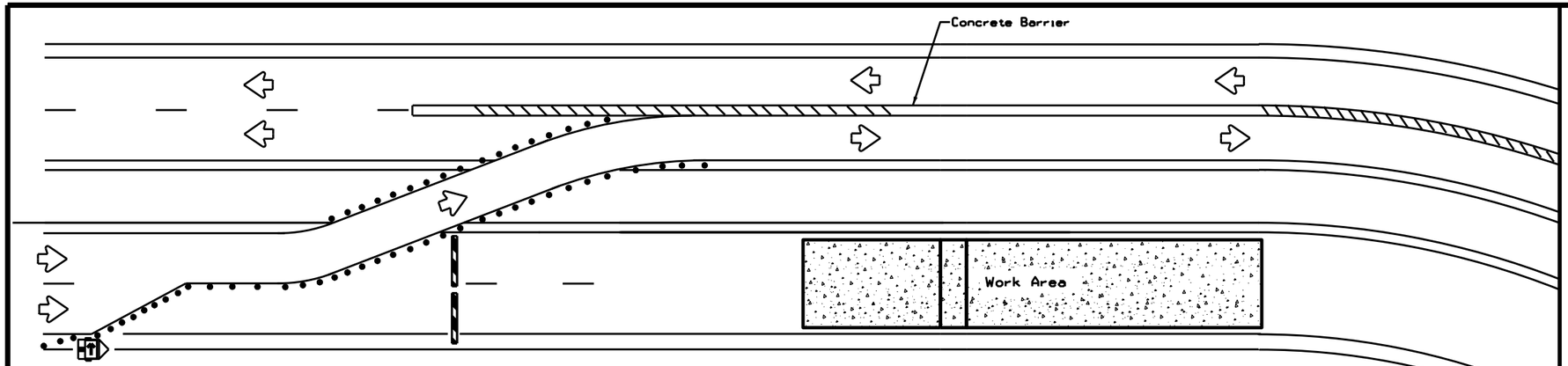

NOTES:

1. Length of Safety Glare screen will be specified elsewhere in the plans.
2. The cumulative nominal length of the modular safety glare screen units shall equal the length of the individual sections of temporary concrete traffic barrier on which they are installed so the joint between barrier sections will not be spanned by any one safety glare screen unit.
3. Screen Panel/blades will be designed such that reflective sheeting conforming with Departmental Material Specification DMS-8300, Sign Face Materials, Type B or C Yellow, minimum size of 2 inches by 12 inches can be attached to the edge of the panel/blade. The sheeting shall be attached to one glare screen panel/blade per section of concrete barrier not to exceed a spacing of 30 feet. Barrier reflectors are not necessary when panel/blades are installed with reflective sheeting as described.
4. Payment for these devices will be under statewide Special Specification "Modular Glare Screens for Headlight Barrier."
5. This detail is only intended to show types of locations where Glare Screens would be appropriate. Required signing and other devices shall be as shown elsewhere in the plans.

BARRIER DELINEATION WITH MODULAR GLARE SCREENS

LEGEND	
	Type 3 Barricade
	Channelizing Devices
	Trailer Mounted Flashing Arrow Board
	Sign
	Safety glare screen

DEPARTMENTAL MATERIAL SPECIFICATIONS	
SIGN FACE MATERIALS	DMS-8300
DELINEATORS AND OBJECT MARKERS	DMS-8600
MODULAR GLARE SCREENS FOR HEADLIGHT BARRIER	DMS-8610

Only pre-qualified products shall be used. A copy of the Compliant Work Zone Traffic Control Devices List" CWZTCD) describes pre-qualified products and their sources and may be found at the following web address:

http://www.txdot.gov/business/resources/producer-list.html

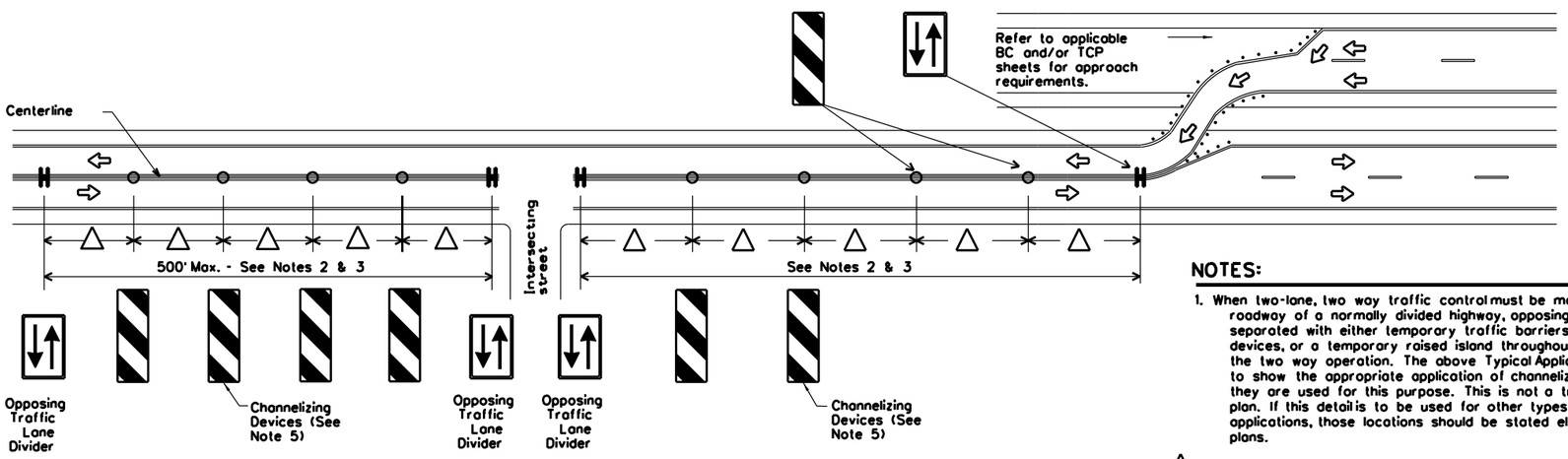

VERTICAL PANELS & OPPOSING TRAFFIC LANE DIVIDERS (OTLD) SEPARATING TWO-WAY TRAFFIC ON NORMALLY DIVIDED HIGHWAYS

NOTES:

1. When two-lane, two way traffic control must be maintained on one roadway of a normally divided highway, opposing traffic shall be separated with either temporary traffic barriers, channelizing devices, or a temporary raised island throughout the length of the two way operation. The above Typical Application is intended to show the appropriate application of channelizing devices when they are used for this purpose. This is not a traffic control plan. If this detail is to be used for other types of roads or applications, those locations should be stated elsewhere in the plans.
2. △ Space devices according to the Tangent Spacing shown on the Device Spacing table on BC(9) but not exceeding 100'.
3. Every fifth device should be an OTLD except when spaced closer to accommodate an intersection. An OTLD should be the first device on each side of intersecting streets or roads.
4. Locations where surface mount bases with adhesives or self-righting devices will be required in order to maintain them in their proper position should be noted elsewhere in the plans.
5. Channelizing devices are to be vertical panels, 42" cones or tubular markers that are at least 36" tall. Tubular markers used to separate traffic should have a rubber base weighing at least 30 pounds. Tubular markers that are 42" tall or more shall have four bands of reflective material as detailed for 42" cones on BC(10). Tubular markers less than 42" but at least 36" tall shall have three bands of 3" wide white reflective material spaced 2" apart. Reflective material shall meet DMS-8300, Type A.

Texas Department of Transportation — Traffic Operations Division Standard

TRAFFIC CONTROL PLAN
TYPICAL DETAILS

WZ(TD)-17

FILE: wztd-17.dgn	DN: TxDOT	CK: TxDOT	DW: TxDOT	CK: TxDOT
© TxDOT February 1998	CONT	SECT	JOB	HIGHWAY
REVISIONS 4-98 2-17 3-03 7-13	0922	33	076	CS
	DIST		COUNTY	SHEET NO.
	LRD		WEBB	47

110

DISCLAIMER:
The use of this standard is governed by the "Texas Engineering Practice Act". No warranty of any kind is made by TxDOT for any purpose whatsoever. TxDOT assumes no responsibility for the conversion of this standard to other formats or for incorrect results or damages resulting from its use.

PLOTTED ON: 7/31/2025 @ 9:54:24 AM DESIGN FILENAME: X:\data\txdot\Projects\359700 LasCruces Flecha\WestLaredoCorridor\IIS\Standards\TCP\wztd-17.dgn

DISCLAIMER:
The use of this standard is governed by the "Texas Engineering Practice Act". No warranty of any kind is made by TxDOT for any purpose whatsoever. TxDOT assumes no responsibility for the conversion of this standard to other formats or for incorrect results or damages resulting from its use.

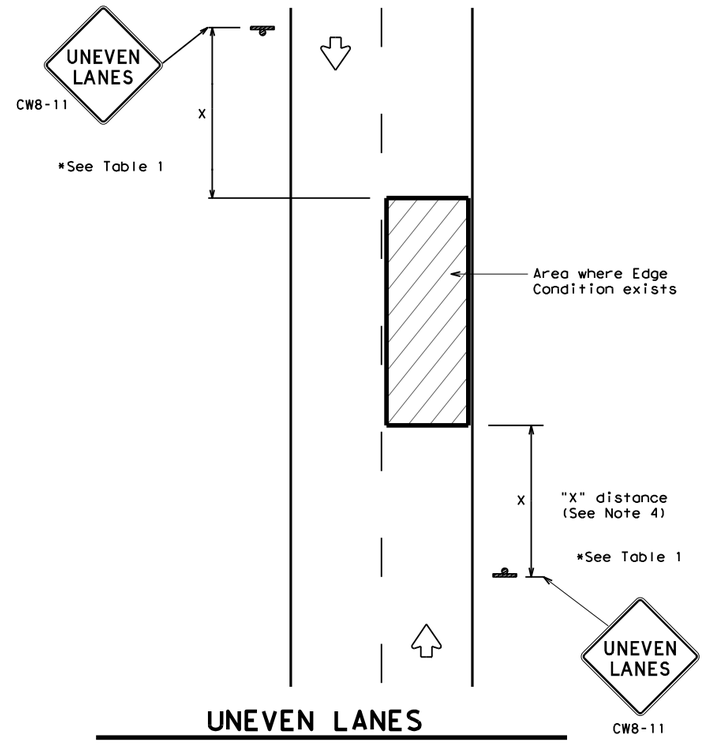

UNEVEN LANES
TWO LANE CONVENTIONAL ROAD

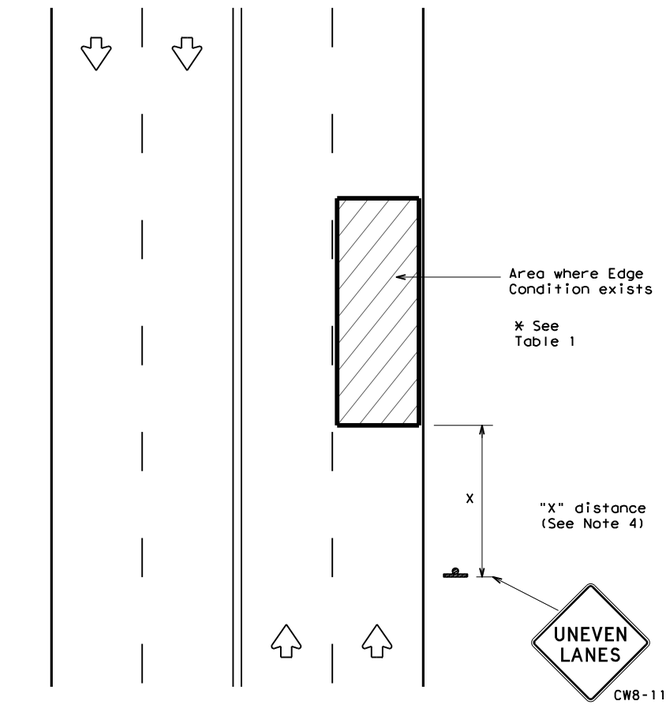

UNEVEN LANES
FOUR LANE CONVENTIONAL ROAD

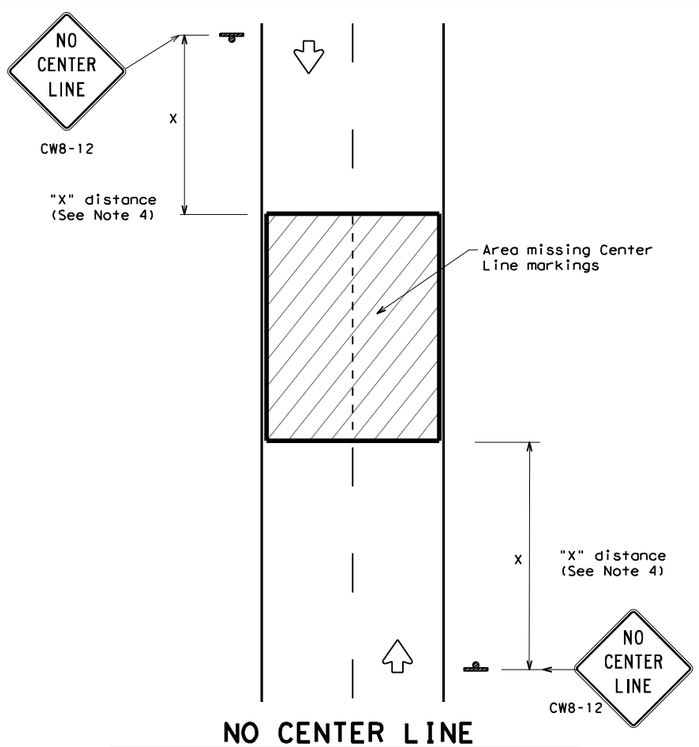

NO CENTER LINE
TWO LANE CONVENTIONAL ROAD

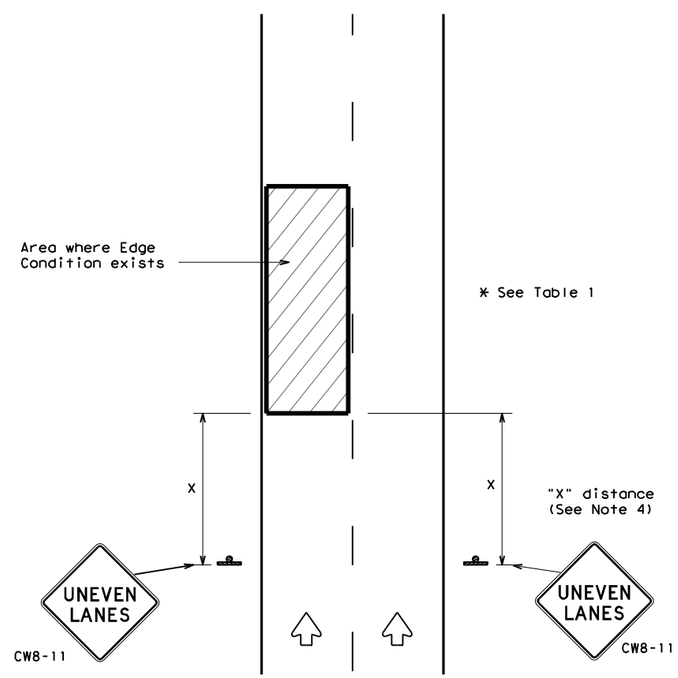

UNEVEN LANES
DIVIDED ROADWAY

DEPARTMENTAL MATERIAL SPECIFICATIONS	
PERMANENT PREFABRICATED PAVEMENT MARKINGS	DMS-8240
TEMPORARY (REMOVABLE) PREFABRICATED PAVEMENT MARKINGS	DMS-8241
SIGN FACE MATERIALS	DMS-8300

COLOR	USAGE	SHEETING MATERIAL
ORANGE	BACKGROUND	TYPE B_{FL} OR TYPE C_{FL} SHEETING
BLACK	LEGEND & BORDERS	ACRYLIC NON-REFLECTIVE SHEETING

GENERAL NOTES

1. If spalling or holes occur, ROUGH ROAD (CW8-8) signs should be placed in advance of the condition and be repeated every two miles where the condition persists.
2. UNEVEN LANES (CW8-11) signs shall be installed in advance of the condition and repeated every mile. Signs installed along the uneven lane condition may be supplemented with the NEXT XX MILES (CW7-3aP) plaque or Advisory Speed (CW13-1P) plaque.
3. NO CENTER LINE (CW8-12) signs and temporary pavement markings as per the WZ(STPM) standard shall be installed if yellow centerlines separating two way traffic are obscured or obliterated. Repeat NO CENTER LINE signs every two miles where the center line markings are not in place. The signs and markings shall remain in place until permanent pavement markings are installed.
4. Signs shall be spaced at the distances recommended as per BC standards.
5. Additional signs may be required as directed by the Engineer. Signs shall remain in place until final surface is applied. Signs shall be considered subsidiary to Item 502 "BARRICADES, SIGNS AND TRAFFIC HANDLING."
6. Signs shall be fabricated and mounted on supports as shown on the BC standards and/or listed on the "Compliant Work Zone Traffic Control Devices" list.
7. Short term markings shall not be used to simulate edge lines.
8. All signs shall be constructed in accordance with the details found in the "Standard Highway Sign Designs for Texas," latest edition.

TABLE 1

Edge Condition	Edge Height (D)	* Warning Devices
① 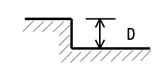	Less than or equal to: 1¼" (maximum-planing) 1½" (typical-overlay)	Sign: CW8-11
	Distance "D" may be a maximum of 1 1/4 " for planing operations and 2" for overlay operations if uneven lanes with edge condition 1 are open to traffic after work operations cease.	
② 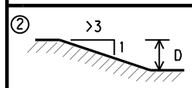	Less than or equal to 3"	Sign: CW8-11
③ 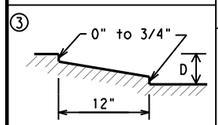 Notched Wedge Joint	Distance "D" may be a maximum of 3" if uneven lanes with edge condition 2 or 3 are open to traffic after work operations cease. Uneven lanes should not be open to traffic when "D" is greater than 3".	

TRAFFIC CONTROL DURING PLANING, OVERLAY AND LEVELING OPERATIONS ARE SHOWN ELSEWHERE IN THE PLANS.

MINIMUM WARNING SIGN SIZE	
Conventional roads	36" x 36"
Freeways/expressways, divided roadways	48" x 48"

Texas Department of Transportation

Traffic Operations Division Standard

SIGNING FOR UNEVEN LANES

WZ(UL)-13

FILE: wzul-13.dgn	DN: TxDOT	CK: TxDOT	DW: TxDOT	CK: TxDOT
© TxDOT April 1992	CONT	SECT	JOB	HIGHWAY
REVISIONS	0922	33	076	CS
8-95 2-98 7-13	DIST		COUNTY	SHEET NO.
1-97 3-03	LRD		WEBB	48

DATE:
FILE:

DISCLAIMER:
The use of this standard is governed by the "Texas Engineering Practice Act". No warranty of any kind is made by TxDOT for any purpose whatsoever. TxDOT assumes no responsibility for the conversion of this standard to other formats or for incorrect results or damages resulting from its use.

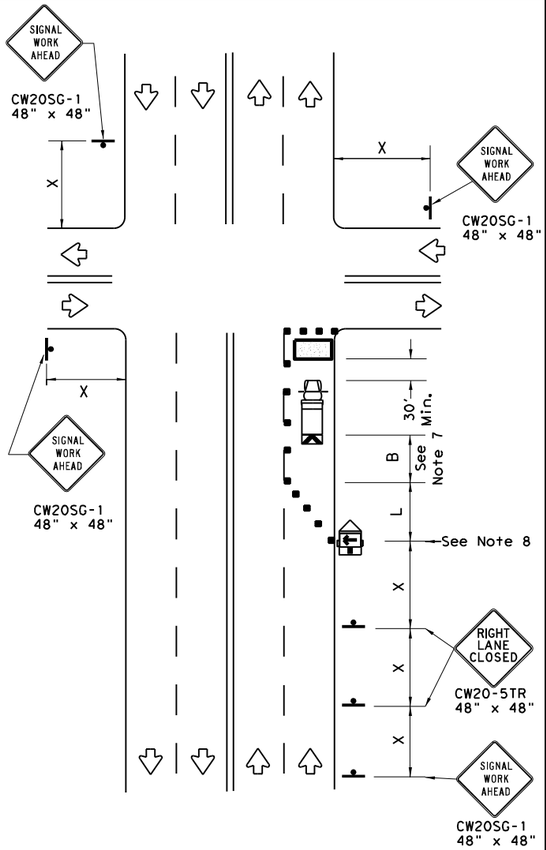

NEAR SIDE LANE CLOSURE

SHORT DURATION OR SHORT TERM STATIONARY

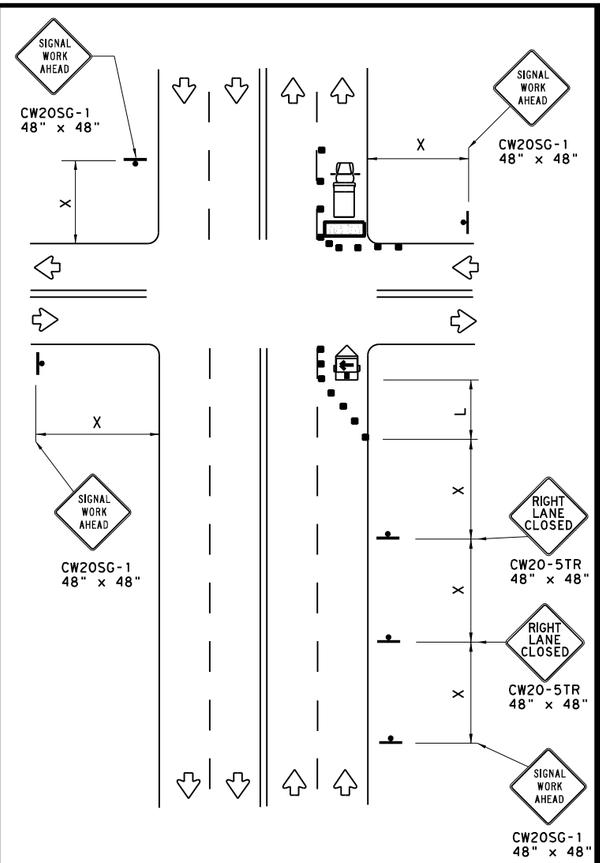

FAR SIDE RIGHT LANE CLOSURE

SHORT DURATION OR SHORT TERM STATIONARY

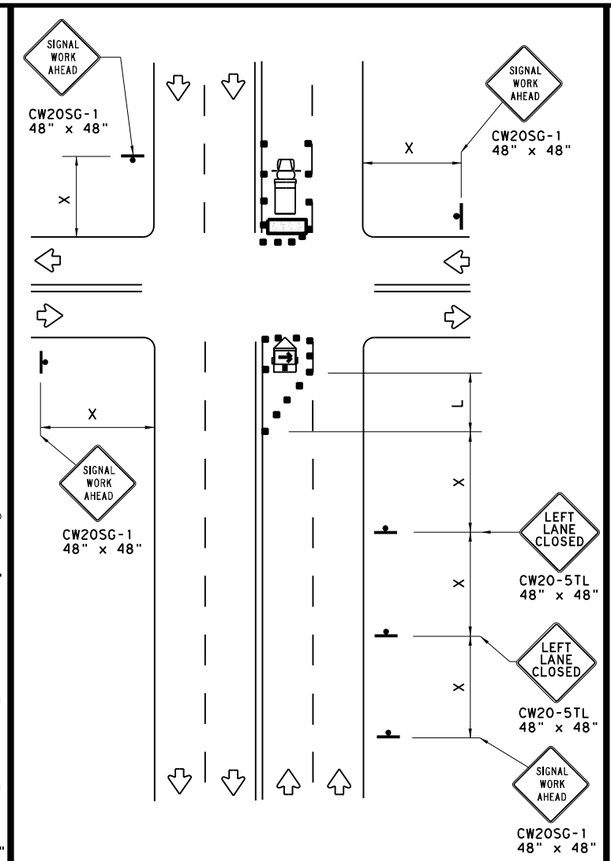

FAR SIDE LEFT LANE CLOSURE

SHORT DURATION OR SHORT TERM STATIONARY

LEGEND

	Type 3 Barricade		Channelizing Devices
	Heavy Work Vehicle		Truck Mounted Attenuator (TMA)
	Trailer Mounted Flashing Arrow Board	M	Portable Changeable Message Sign (PCMS)
	Sign		Traffic Flow
	Flag		Flagger

Posted Speed *	Formula	Minimum Desirable Taper Lengths ** 10' Offset	11' Offset	12' Offset	Suggested Maximum Spacing of Channelizing Devices On a Taper	On a Tangent	Minimum Sign Spacing "X" Distance	Suggested Longitudinal Buffer Space "B"
30	$L = \frac{WS^2}{60}$	150'	165'	180'	30'	60'	120'	90'
35		205'	225'	245'	35'	70'	160'	120'
40		265'	295'	320'	40'	80'	240'	155'
45	L = WS	450'	495'	540'	45'	90'	320'	195'
50		500'	550'	600'	50'	100'	400'	240'
55		550'	605'	660'	55'	110'	500'	295'
60		600'	660'	720'	60'	120'	600'	350'
65		650'	715'	780'	65'	130'	700'	410'
70		700'	770'	840'	70'	140'	800'	475'
75		750'	825'	900'	75'	150'	900'	540'

* Conventional Roads Only
** Taper lengths have been rounded off.
L=Length of Taper(FT) W=Width of Offset(FT) S=Posted Speed(MPH)

WORKERS IN BUCKET TRUCKS SHALL NOT WORK ABOVE OPEN LANES OF TRAFFIC.

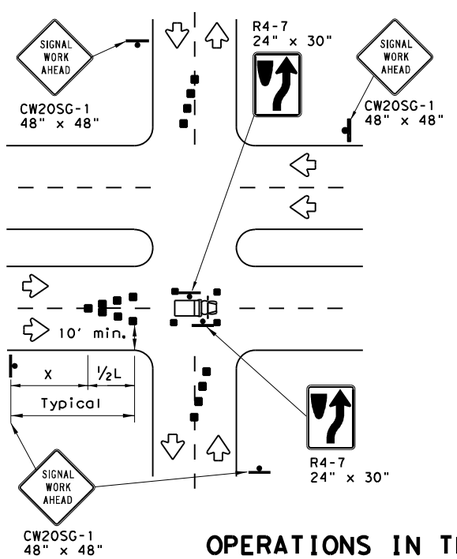

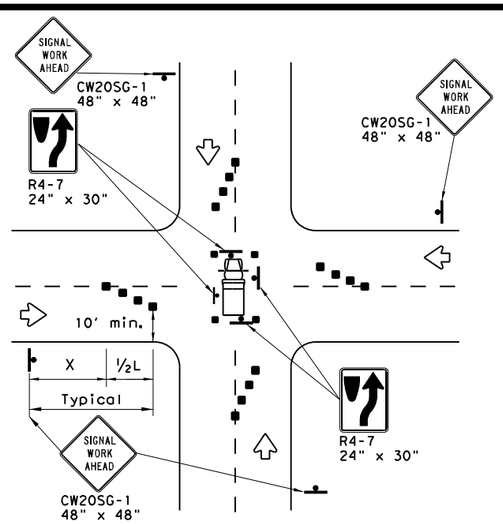

OPERATIONS IN THE INTERSECTION

SHORT DURATION

GENERAL NOTES

1. The minimum size channelizing device is the 28" cone. 42" Two-piece cones, drums, vertical panels or barricades will be required when the device must be left unattended at night.
2. Obstructions or hazards at the work area shall be clearly marked and delineated at all times.
3. Flaggers and Flagger Symbol (CW20-7) signs may be required according to field conditions.
4. Vehicles parked in roadway shall be equipped with at least two high intensity rotating, flashing, oscillating or strobe type lights.
5. High level warning devices (flag trees) may be used at corners of the vehicle.
6. When work operations are performed on existing signals, the signals may be placed in flashing red mode when approved by the engineer. If existing signals do not have power, All-Way Stop (R1-1 and R1-3P) signs may be implemented when approved by the engineer.
7. For Short-Term Stationary work the buffer space "B" from the above table should be used if field conditions permit. For Short Duration (less than 1 hour) any buffer space provided will enhance the safety of the setup.
8. The arrow board at this location may be omitted for Short Duration work if the work vehicle has an arrow board in operation. As an option, the arrow board may be placed at the end of the taper in the closed lane if space is not available at the beginning of the taper.
9. Signs and devices for the NEAR SIDE LANE CLOSURE may be altered for a left lane closure by using a LEFT LANE CLOSED (CW20-5TL) and adding channelizing devices on the centerline to protect the work space from opposing traffic.

SHEET 1 OF 2

Texas Department of Transportation — Traffic Operations Division Standard

TRAFFIC SIGNAL WORK TYPICAL DETAILS

WZ(BTS-1)-13

FILE: wzbts-13.dgn	DN: TxDOT	CK: TxDOT	DW: TxDOT	CK: TxDOT
© TxDOT April 1992	CONT	SECT	JOB	HIGHWAY
REVISIONS	0922	33	076	CS
2-98 10-99 7-13	DIST		COUNTY	SHEET NO.
4-98 3-03	LRD		WEBB	49

DATE:
FILE:

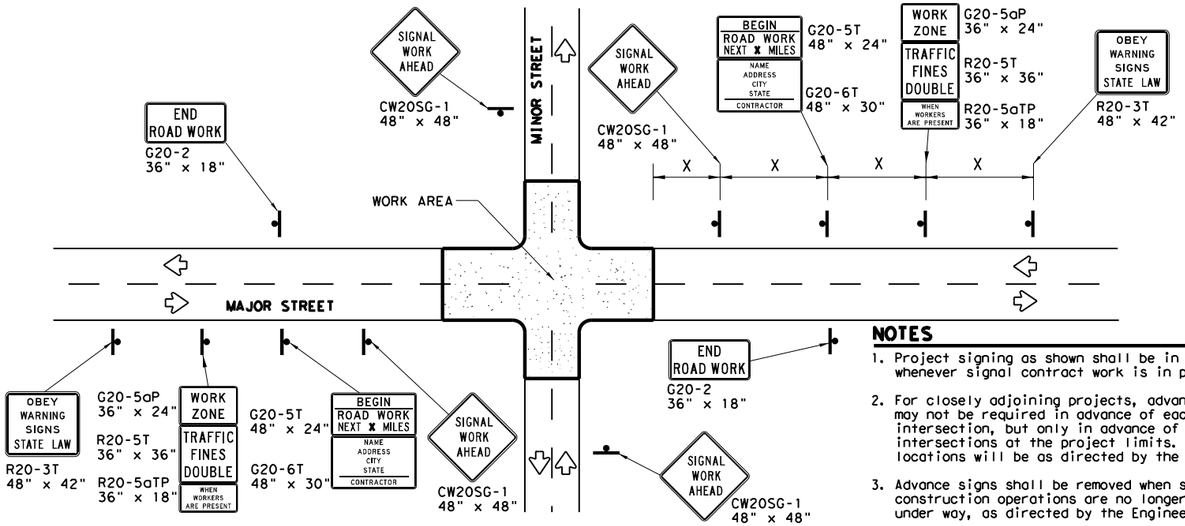

TYPICAL ADVANCE SIGNAL PROJECT SIGNING

FOR LONG TERM and INTERMEDIATE-TERM STATIONARY WORK OPERATIONS

NOTES

1. Project signing as shown shall be in place whenever signal contract work is in progress.
2. For closely adjoining projects, advance signing may not be required in advance of each intersection, but only in advance of the intersections at the project limits. Actual locations will be as directed by the Engineer.
3. Advance signs shall be removed when signal construction operations are no longer under way, as directed by the Engineer.
4. Warning sign spacing shown is typical for both directions.
5. See the Table on sheet 1 of 2 for Typical warning sign spacing.

GENERAL NOTES FOR WORK ZONE SIGNS

1. Signs shall be installed and maintained in a straight and plumb condition.
2. Wooden sign posts shall be painted white.
3. Barricades shall NOT be used as sign supports.
4. Nails shall NOT be used to attach signs to any support.
5. All signs shall be installed in accordance with the plans or as directed by the Engineer.
6. The Contractor shall furnish the sign design shown in the plans or in the "Standard Highway Sign Designs for Texas" (SHSD).
7. The Contractor shall furnish sign supports and substrates listed in the "Compliant Work Zone Traffic Control Device List" (CWZTCD), installed as per the manufacturer's recommendations.
8. Temporary signs that have damaged or cracked substrates and/or damaged or marred reflective sheeting shall be replaced as directed by the Engineer.
9. Identification markings may be shown only on the back of the sign substrate. The maximum height of letters and/or company logos used for identification shall be 1".
10. Damaged wood posts shall be replaced. Splicing wood posts will not be allowed.

DURATION OF WORK

1. Work zone durations are defined in Part 6, Section 6G.02 of the Texas Manual on Uniform Traffic Control Devices (TMUTCD).

SIGN MOUNTING HEIGHT

1. Sign height of Long-term/Intermediate-term warning signs shall be as shown on Figure 6F-1 of the TMUTCD.
2. Sign height of Short-term/Short Duration warning signs shall be as shown on Figure 6F-2 of the TMUTCD.
3. Regulatory signs shall be mounted at least 7 feet, but not more than 9 feet, above the paved surface regardless of work duration.

REMOVING OR COVERING

1. When sign messages may be confusing or do not apply, the signs shall be removed or completely covered, unless otherwise approved by the Engineer.
2. When signs are covered, the material used shall be opaque, such as heavy mil black plastic, or other materials which will cover the entire sign face and maintain their opaque properties under automobile headlights at night without damaging the sign sheeting. Burlap, or heavy materials such as plywood or aluminum shall not be used to cover signs.
3. Duct tape or other adhesive material shall NOT be affixed to a sign face.
4. Signs and anchor stubs shall be removed and holes back filled upon completion of the work.

REFLECTIVE SHEETING

1. All signs shall be retroreflective and constructed of sheeting meeting the requirements of the DMS and color usage table shown on this sheet.

SIGN SUPPORT WEIGHTS

1. Weights used to keep signs from turning over should be sandbags filled with dry, cohesionless material.
2. The sandbags will be tied shut to keep the sand from spilling and to maintain a constant weight.
3. Rock, concrete, iron, steel or other solid objects will not be permitted for use as sign support weights.
4. Sandbags should weigh a minimum of 35 lbs and a maximum of 50 lbs.
5. Sandbags shall be made of a durable material that tears upon vehicular impact. Rubber, such as tire inner tubes, shall not be used.
6. Rubber ballasts designed for channelizing devices should not be used for ballast on portable sign supports. Sign supports designed and manufactured with rubber bases may be used when shown on the CWZTCD list.
7. Sandbags shall only be placed along or laid over the base supports of the traffic control device and shall not be suspended above ground level or hung with rope, wire, chains or other fastners. Sandbags shall be placed along the length of the skids to weigh down the sign support.
8. Sandbags shall NOT be placed under the skid and shall not be used to level sign supports placed on slopes.

LEGEND	
	Sign
	Channelizing Devices
	Type 3 Barricade

DEPARTMENTAL MATERIAL SPECIFICATIONS	
SIGN FACE MATERIALS	DMS-8300
FLEXIBLE ROLL-UP REFLECTIVE SIGNS	DMS-8310

COLOR	USAGE	SHEETING MATERIAL
ORANGE	BACKGROUND	TYPE B_{FL} OR TYPE C_{FL} SHEETING
WHITE	BACKGROUND	TYPE A SHEETING
BLACK	LEGEND & BORDERS	ACRYLIC NON-REFLECTIVE SHEETING

Only pre-qualified products shall be used. A copy of the "Compliant Work Zone Traffic Control Devices List" (CWZTCD) describes pre-qualified products and their sources and may be found at the following web address:
http://www.txdot.gov/txdot_library/publications/construction.htm

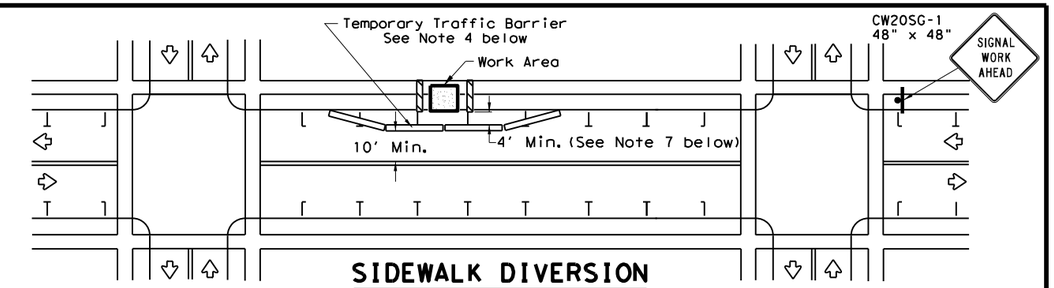

SIDEWALK DIVERSION

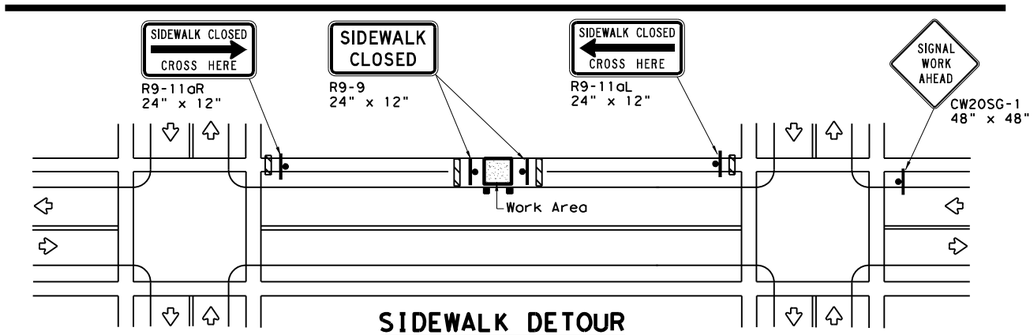

SIDEWALK DETOUR

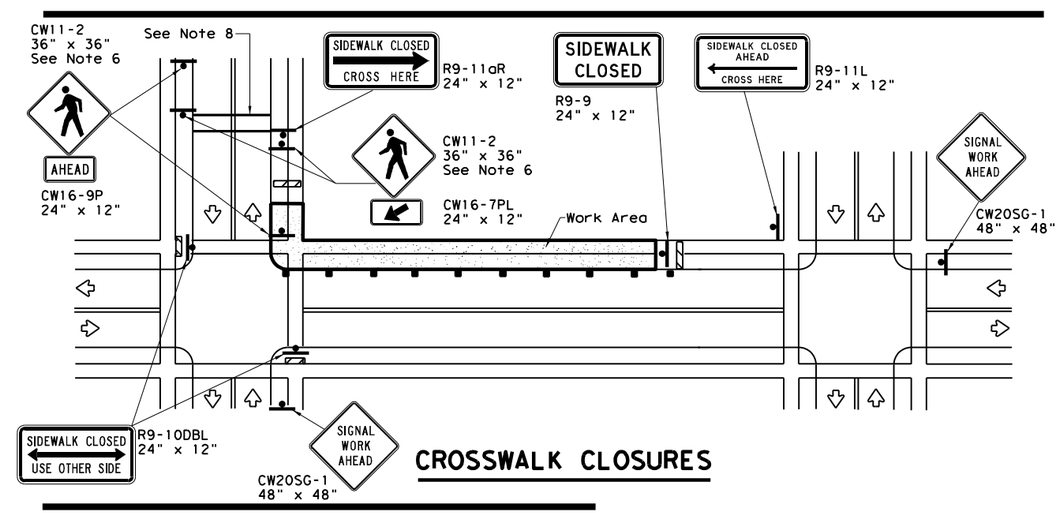

CROSSWALK CLOSURES

PEDESTRIAN CONTROL

1. Holes, trenches or other hazards shall be adequately protected by covering, delineating or surrounding the hazard with orange plastic pedestrian fencing or longitudinal channelizing devices, or as directed by the Engineer.
2. "CROSSWALK CLOSURES" as detailed above will require the Engineer's approval prior to installation.
3. R9 series signs shown may be placed on supports detailed on the BC standards or CWZTCD list, or when fabricated from approved lightweight plastic substrates, they may be mounted on top of a plastic drum at or near the location shown.
4. For speeds less than 45 mph longitudinal channelizing devices may be used instead of traffic barriers when approved by the Engineer. Attenuation of blunt ends and installation of water filled devices shall be as per BC(9) and manufacturer's recommendations.
5. Location of devices are for general guidance. Actual device spacing and location must be field adjusted to meet actual conditions.
6. Where pedestrians with visual disabilities normally use the closed sidewalk Detectable Pedestrian Barricades should be used instead of the Type 3 Barricades shown.
7. The width of existing sidewalk should be maintained if practical.
8. Pavement markings for mid-block crosswalks shall be paid for under the appropriate bid items.
9. When crosswalks or other pedestrian facilities are closed or relocated, temporary facilities shall be detectable and shall include accessibility features consistent with the features present in the existing pedestrian facility.

Texas Department of Transportation — Traffic Operations Division Standard

TRAFFIC SIGNAL WORK BARRICADES AND SIGNS

WZ(BTS-2)-13

FILE: wzbts-13.dgn	DN: TxDOT	CK: TxDOT	DW: TxDOT	CK: TxDOT
©TxDOT April 1992	CONT	SECT	JOB	HIGHWAY
REVISIONS	0922	33	076	CS
2-98 10-99 7-13	DIST		COUNTY	SHEET NO.
4-98 3-03	LRD		WEBB	50

DISCLAIMER:
The use of this standard is governed by the "Texas Engineering Practice Act". No warranty of any kind is made by TxDOT for any purpose whatsoever. TxDOT assumes no responsibility for the conversion of this standard to other formats or for incorrect results or damages resulting from its use.

DATE:
FILE:

DISCLAIMER:
The use of this standard is governed by the "Texas Engineering Practice Act". No warranty of any kind is made by TxDOT for any purpose whatsoever. TxDOT assumes no responsibility for the conversion of this standard to other formats or for incorrect results or damages resulting from its use.

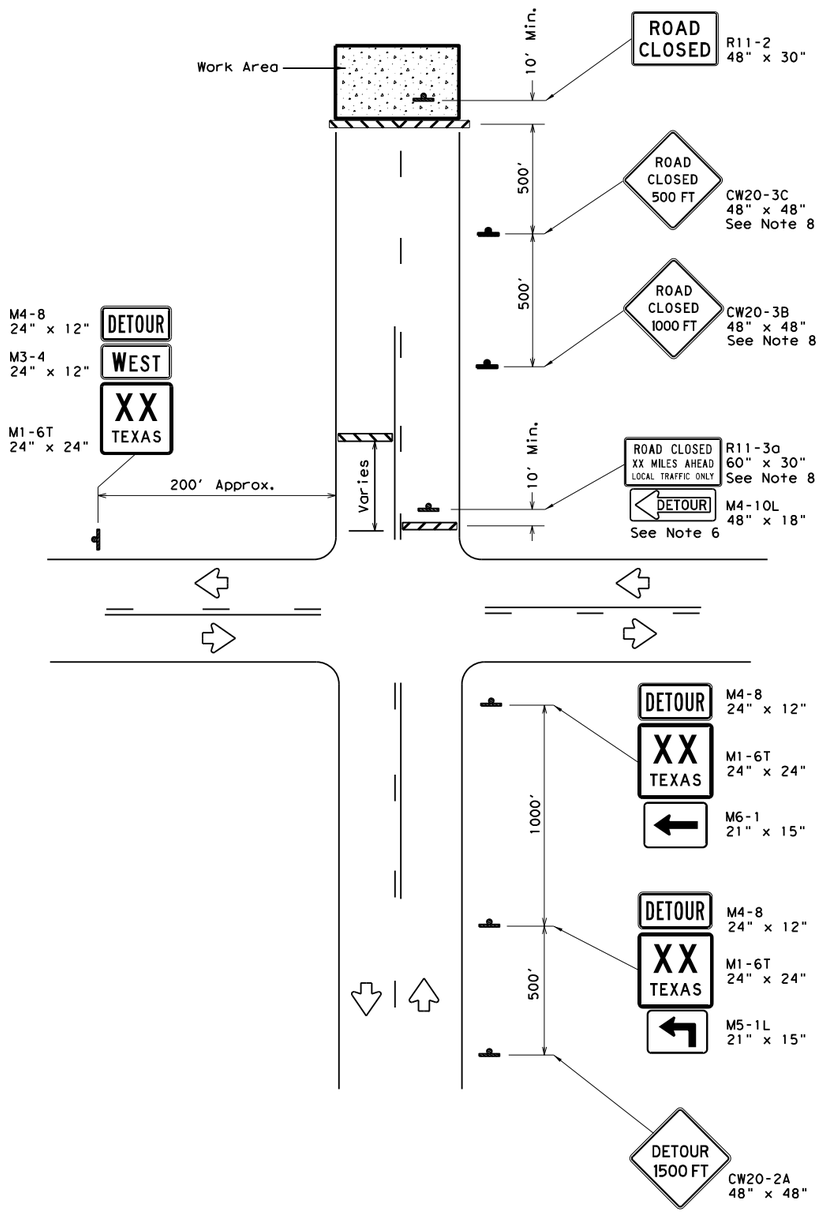

ROAD CLOSURE BEYOND THE INTERSECTION

Signing for a Numbered Route with an Off-Site Detour

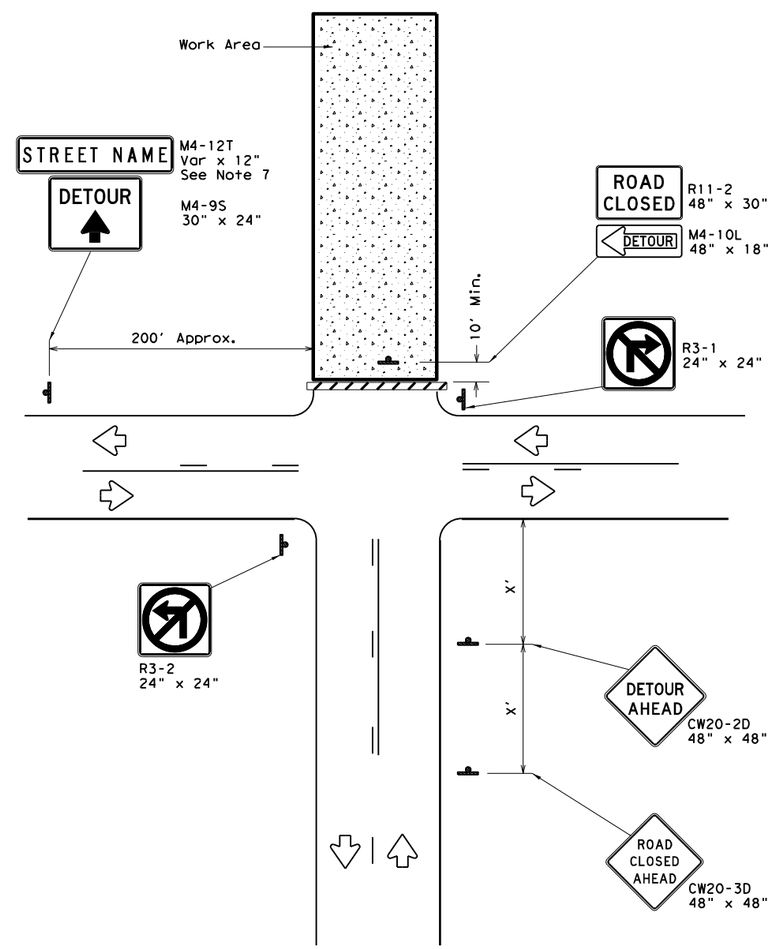

ROAD CLOSURE AT THE INTERSECTION

Signing for an Un-numbered Route with an Off-Site Detour

LEGEND	
	Type 3 Barricade
	Sign

Posted Speed *	Minimum Sign Spacing "X" Distance
30	120'
35	160'
40	240'
45	320'
50	400'
55	500'
60	600'
65	700'
70	800'
75	900'

* Conventional Roads Only

GENERAL NOTES

1. This sheet is intended to provide details for temporary work zone road closures. For permanent road closure details see the D&OM standards.
2. Barricades used shall meet the requirements shown on Barricade and Construction Standard BC(10) and listed on the Compliant Work Zone Traffic Control Devices list (CWZTCD).
3. Stockpiled materials shall not be placed on the traffic side of barricades.
4. Barricades at the road closure should extend from pavement edge to pavement edge.
5. Detour signing shown is intended to illustrate the type of signing that is appropriate for numbered routes or un-numbered routes as labeled. It does not indicate the full extent of detour signing required. Detour routes should be signed as shown elsewhere in the plans.
6. If the road is open for a significant distance beyond the intersection or there are significant origin/destination points beyond the intersection, the signs and barricades at this location should be located at the edge of the traveled way.
7. The Street Name (M4-12T) sign is to be placed above the DETOUR (M4-9S) sign.
8. For urban areas where there is a shorter distance between the intersection and the actual closure location, the ROAD CLOSED XX MILES AHEAD (R11-3a) sign may be replaced with a ROAD CLOSED TO THRU TRAFFIC (R11-4) sign. If adequate space does not exist between the intersection and the closure a single ROAD CLOSED AHEAD (CW20-3D) sign spaced as per the table above may replace the ROAD CLOSED 1000 FT (CW20-3B) and ROAD CLOSED 500 FT (CW20-3C) signs.
9. Signs and barricades shown shall be subsidiary to Item 502. Locations where these details will be required shall be as shown elsewhere in the plans.

Texas Department of Transportation

Traffic Operations Division Standard

WORK ZONE ROAD CLOSURE DETAILS

WZ(RCD)-13

FILE: wzrcd-13.dgn	DN: TxDOT	CK: TxDOT	DW: TxDOT	CK: TxDOT
© TxDOT August 1995	CONT	SECT	JOB	HIGHWAY
REVISIONS	0922	33	076	CS
1-97 4-98 7-13	DIST		COUNTY	SHEET NO.
2-98 3-03	LRD		WEBB	51

DATE:
FILE:

DISCLAIMER:
The use of this standard is governed by the "Texas Engineering Practice Act". No warranty of any kind is made by TxDOT for any purpose whatsoever. TxDOT assumes no responsibility for the conversion of this standard to other formats or for incorrect results or damages resulting from its use.

PLOTTED ON: 7/31/2025 @ 10:00:22 AM DESIGN FILENAME: X:\datatxdot\Projects\359700 LasCruces FlechaWest\arcid\Corridor\IIS\Standards\TCP\tcp1-2-18.dgn

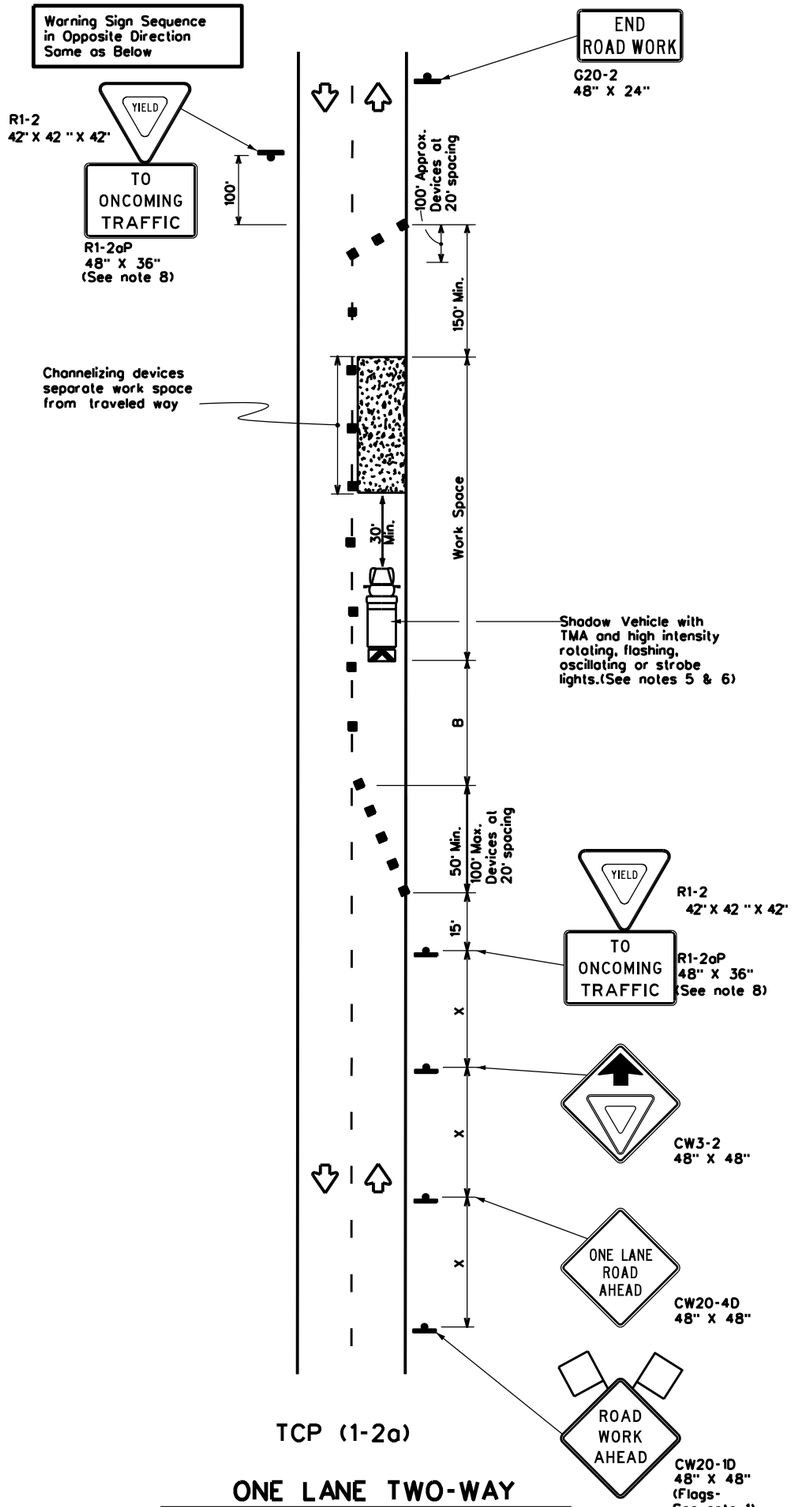

TCP (1-2a)

ONE LANE TWO-WAY CONTROL WITH YIELD SIGNS

(Less than 2000 ADT - See note 7)

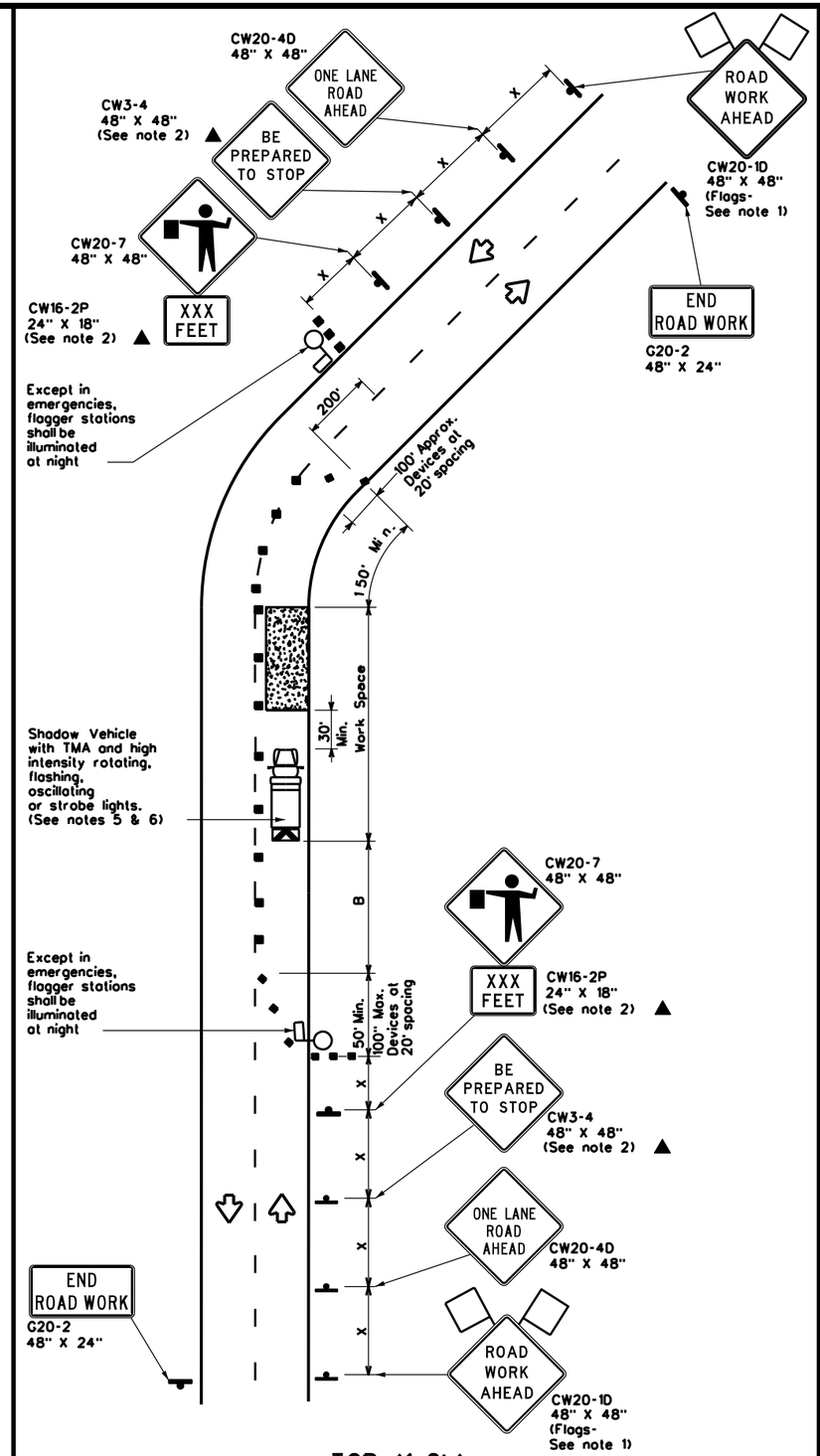

TCP (1-2b)

ONE LANE TWO-WAY CONTROL WITH FLAGGERS

LEGEND

	Type 3 Barricade		Channelizing Devices
	Heavy Work Vehicle		Truck Mounted Attenuator (TMA)
	Trailer Mounted Flashing Arrow Board		Portable Changeable Message Sign (PCMS)
	Sign		Traffic Flow
	Flag		Flagger

Posted Speed *	Formula	Minimum Desirable Taper Lengths ** 10' Offset	11' Offset	12' Offset	Suggested Maximum Spacing of Channelizing Devices On a Taper	On a Tangent	Minimum Sign Spacing "X" Distance	Suggested Longitudinal Buffer Space "B"	Stopping Sight Distance
30	$L = \frac{WS^2}{60}$	150'	165'	180'	30'	60'	120'	90'	200'
35		205'	225'	245'	35'	70'	160'	120'	250'
40		265'	295'	320'	40'	80'	240'	155'	305'
45	L = WS	450'	495'	540'	45'	90'	320'	195'	360'
50		500'	550'	600'	50'	100'	400'	240'	425'
55		550'	605'	660'	55'	110'	500'	295'	495'
60		600'	660'	720'	60'	120'	600'	350'	570'
65		650'	715'	780'	65'	130'	700'	410'	645'
70		700'	770'	840'	70'	140'	800'	475'	730'
75		750'	825'	900'	75'	150'	900'	540'	820'

* Conventional Roads Only
** Taper lengths have been rounded off.
L = Length of Taper(FT) W = Width of Offset(FT) S = Posted Speed(MPH)

TYPICAL USAGE

MOBILE	SHORT DURATION	SHORT TERM STATIONARY	INTERMEDIATE TERM STATIONARY	LONG TERM STATIONARY
	✓	✓		

GENERAL NOTES

1. Flags attached to signs where shown are REQUIRED.
2. All traffic control devices illustrated are REQUIRED, except those denoted with the triangle symbol may be omitted when stated elsewhere in the plans, or for routine maintenance work, when approved by the Engineer.
3. The CW3-4 "BE PREPARED TO STOP" sign may be installed after the CW20-4D "ONE LANE ROAD AHEAD" sign, but proper sign spacing shall be maintained.
4. Sign spacing may be increased or an additional CW20-1D "ROAD WORK AHEAD" sign may be used if advance warning ahead of the flagger or R1-2 "YIELD" sign is less than 1500 feet.
5. A Shadow Vehicle with a TMA should be used anytime it can be positioned 30 to 100 feet in advance of the area of crew exposure without adversely affecting the performance or quality of the work. If workers are no longer present but road or work conditions require the traffic control to remain in place, Type 3 Barricades or other channelizing devices may be substituted for the Shadow Vehicle and TMA.
6. Additional Shadow Vehicles with TMAs may be positioned off the paved surface, next to those shown in order to protect wider work spaces.

TCP (1-2a)

7. R1-2 "YIELD" sign traffic control may be used on projects with approaches that have adequate sight distance. For projects in urban areas, work spaces should be no longer than one half city block. In rural areas on roadways with less than 2000 ADT, work spaces should be no longer than 400 feet.
8. R1-2 "YIELD" sign with R1-2aP "TO ONCOMING TRAFFIC" plaque shall be placed on a support at a 7 foot minimum mounting height.

TCP (1-2b)

9. Flaggers should use two-way radios or other methods of communication to control traffic.
10. Length of work space should be based on the ability of flaggers to communicate.
11. If the work space is located near a horizontal or vertical curve, the buffer distances should be increased in order to maintain adequate stopping sight distance to the flagger and a queue of stopped vehicles (see table above).
12. Channelizing devices on the center-line may be omitted when a pilot car is leading traffic and approved by the Engineer.
13. Flaggers should use 24" STOP/SLOW paddles to control traffic. Flags should be limited to emergency situations.

Texas Department of Transportation — Traffic Operations Division Standard

TRAFFIC CONTROL PLAN ONE-LANE TWO-WAY TRAFFIC CONTROL

TCP(1-2)-18

FILE: tcp1-2-18.dgn	DN:	CK:	DW:	CK:
© TxDOT December 1985	CONT	SECT	JOB	HIGHWAY
REVISIONS 4-90 4-98 2-94 2-12 1-97 2-18	0922	33	076	CS
	DIST		COUNTY	SHEET NO.
	LRD		WEBB	52

DISCLAIMER:
The use of this standard is governed by the "Texas Engineering Practice Act". No warranty of any kind is made by TxDOT for any purpose whatsoever. TxDOT assumes no responsibility for the conversion of this standard to other formats or for incorrect results or damages resulting from its use.

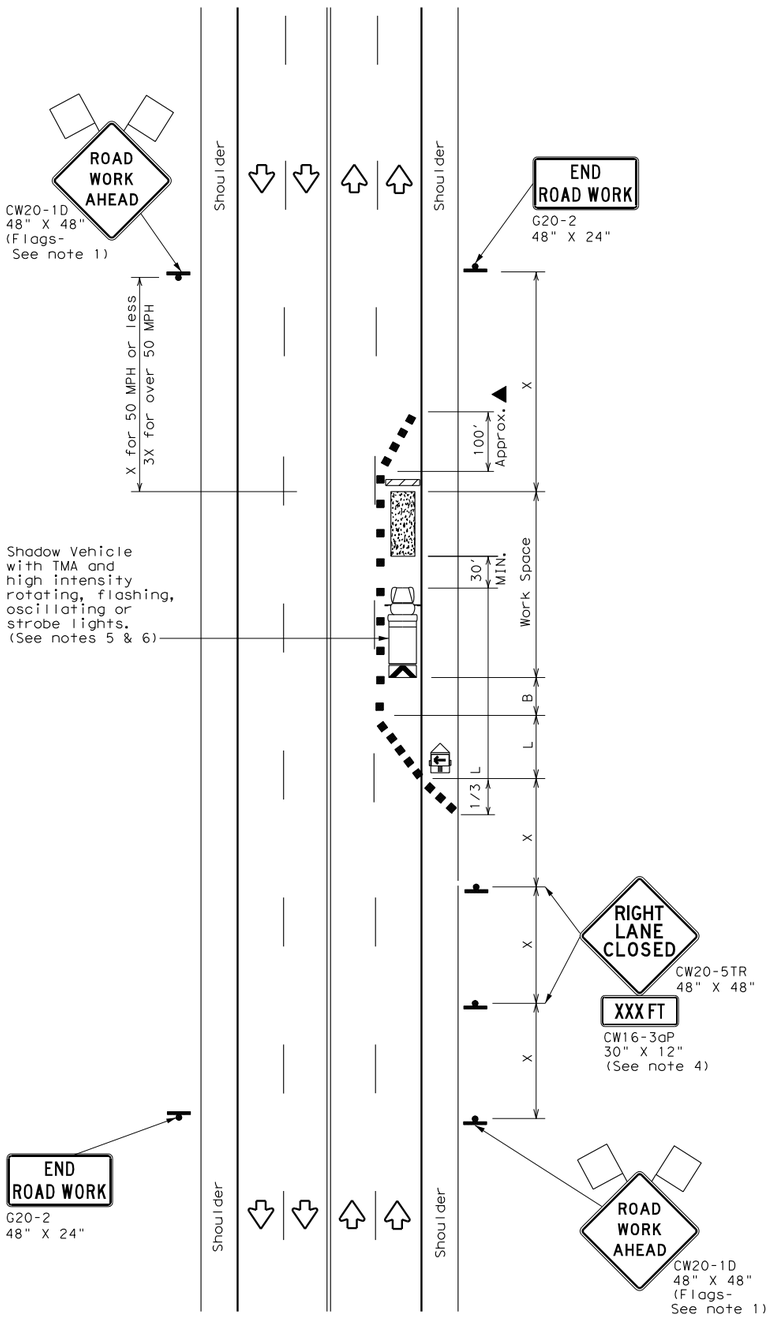

TCP (2-4a)

ONE LANE CLOSED

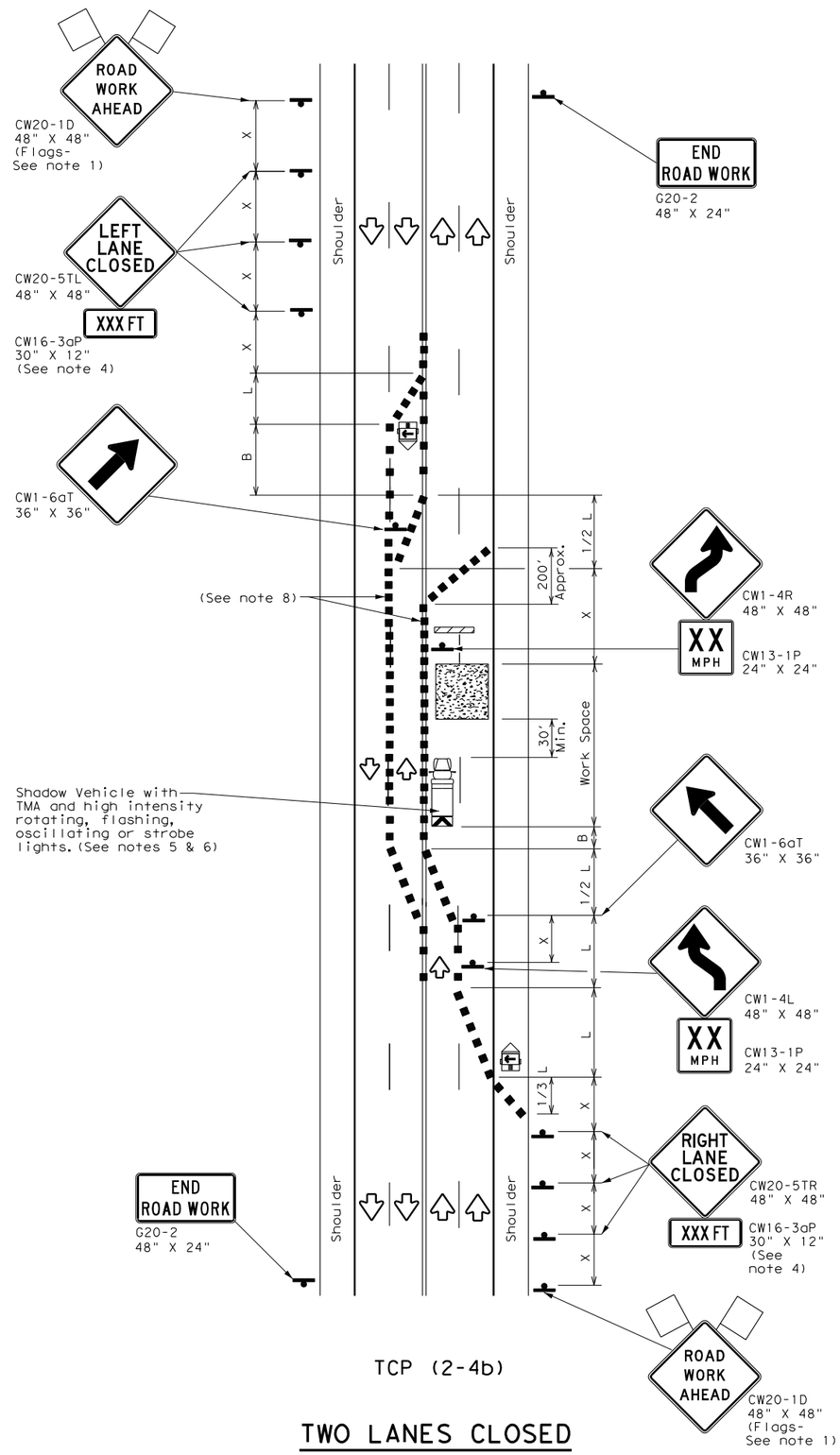

TCP (2-4b)

TWO LANES CLOSED

LEGEND

	Type 3 Barricade		Channelizing Devices
	Heavy Work Vehicle		Truck Mounted Attenuator (TMA)
	Trailer Mounted Flashing Arrow Board		Portable Changeable Message Sign (PCMS)
	Sign		Traffic Flow
	Flag		Flagger

Posted Speed *	Formula	Minimum Desirable Taper Lengths ** 10' Offset	11' Offset	12' Offset	Suggested Maximum Spacing of Channelizing Devices On a Taper	On a Tangent	Minimum Sign Spacing "X" Distance	Suggested Longitudinal Buffer Space "B"
30	$L = \frac{WS^2}{60}$	150'	165'	180'	30'	60'	120'	90'
35		205'	225'	245'	35'	70'	160'	120'
40		265'	295'	320'	40'	80'	240'	155'
45	L = WS	450'	495'	540'	45'	90'	320'	195'
50		500'	550'	600'	50'	100'	400'	240'
55		550'	605'	660'	55'	110'	500'	295'
60		600'	660'	720'	60'	120'	600'	350'
65		650'	715'	780'	65'	130'	700'	410'
70		700'	770'	840'	70'	140'	800'	475'
75		750'	825'	900'	75'	150'	900'	540'

* Conventional Roads Only

** Taper lengths have been rounded off.
L=Length of Taper(FT) W=Width of Offset(FT) S=Posted Speed(MPH)

TYPICAL USAGE

MOBILE	SHORT DURATION	SHORT TERM STATIONARY	INTERMEDIATE TERM STATIONARY	LONG TERM STATIONARY
		✓	✓	

GENERAL NOTES

1. Flags attached to signs where shown, are REQUIRED.
2. All traffic control devices illustrated are REQUIRED, except those denoted with the triangle symbol may be omitted when stated elsewhere in the plans, or for routine maintenance work, when approved by the Engineer.
3. The downstream taper is optional. When used, it should be 100 feet minimum length per lane.
4. For short term applications, when post mounted signs are not used, the distance legend may be shown on the sign face rather than on a CW16-3aP supplemental plaque.
5. A Shadow Vehicle with a TMA should be used anytime it can be positioned 30 to 100 feet in advance of the area of crew exposure without adversely affecting the performance or quality of the work. If workers are no longer present but road or work conditions require the traffic control to remain in place, Type 3 Barricades or other channelizing devices may be substituted for the Shadow Vehicle and TMA.
6. Additional Shadow Vehicles with TMAs may be positioned in each closed lane, on the shoulder or off the paved surface, next to those shown in order to protect a wider work space.

TCP (2-4a)

7. If this TCP is used for a left lane closure, CW20-5TL "LEFT LANE CLOSED"signs shall be used and channelizing devices shall be placed on the centerline to protect the work space from opposing traffic with the arrow board placed in the closed lane near the end of the merging taper.

TCP (2-4b)

8. For shorter durations where traffic is directed over a yellow centerline, channelizing devices which separate two-way traffic should be spaced on tapers at 20' or 15' if posted speeds are 35 mph or slower, and for tangent sections, at 1/2(S) where S is the speed in mph. This tighter devices spacing is intended for the area of conflicting markings, not the entire work zone.

Texas Department of Transportation — Traffic Operations Division Standard

TRAFFIC CONTROL PLAN LANE CLOSURES ON MULTILANE CONVENTIONAL ROADS

TCP(2-4)-18

FILE: tcp2-4-18.dgn	DN:	CK:	DW:	CK:
©TxDOT December 1985	CONT	SECT	JOB	HIGHWAY
REVISIONS 8-95 3-03	0922	33	076	CS
1-97 2-12	DIST		COUNTY	SHEET NO.
4-98 2-18	LRD		WEBB	53

DATE:
FILE:

DISCLAIMER:
The use of this standard is governed by the "Texas Engineering Practice Act". No warranty of any kind is made by TxDOT for any purpose whatsoever. TxDOT assumes no responsibility for the conversion of this standard to other formats or for incorrect results or damages resulting from its use.

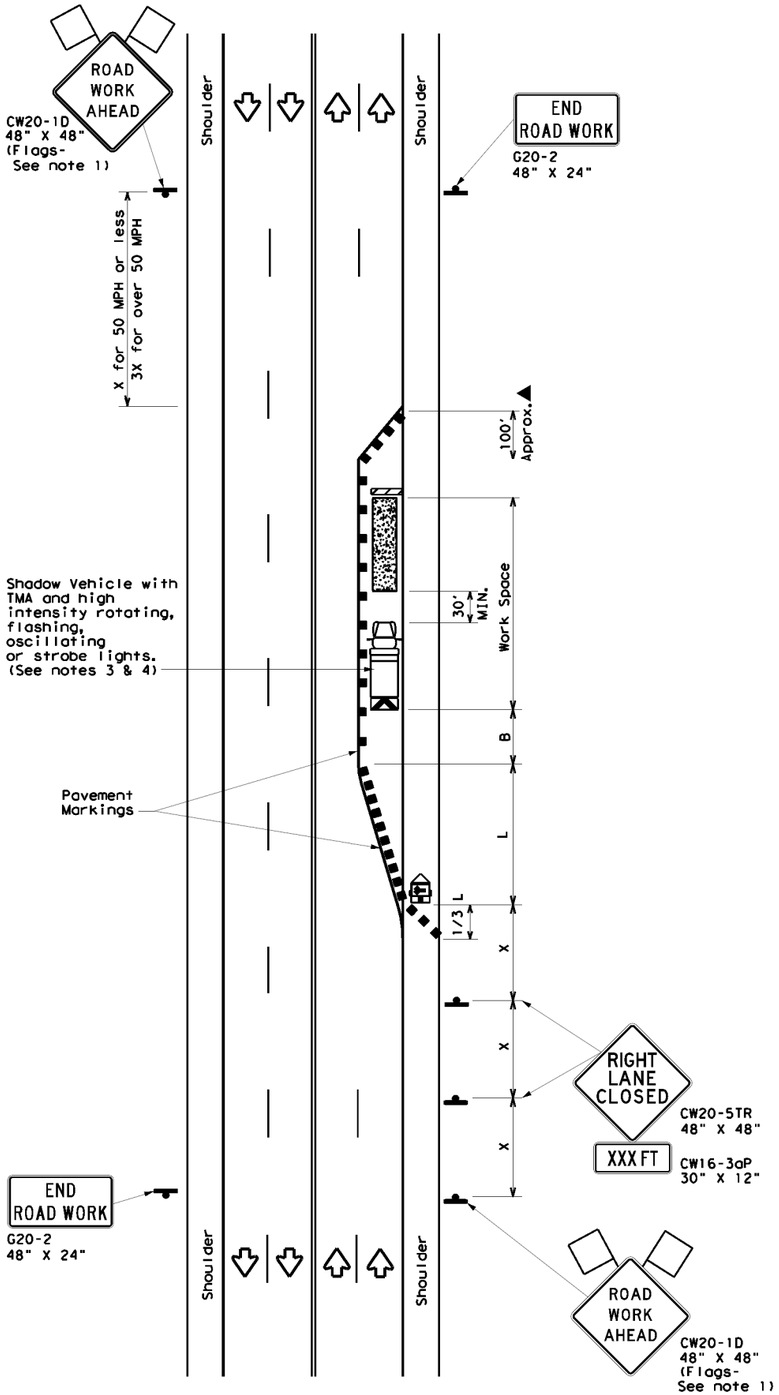

TCP (2-5a)

ONE LANE CLOSED

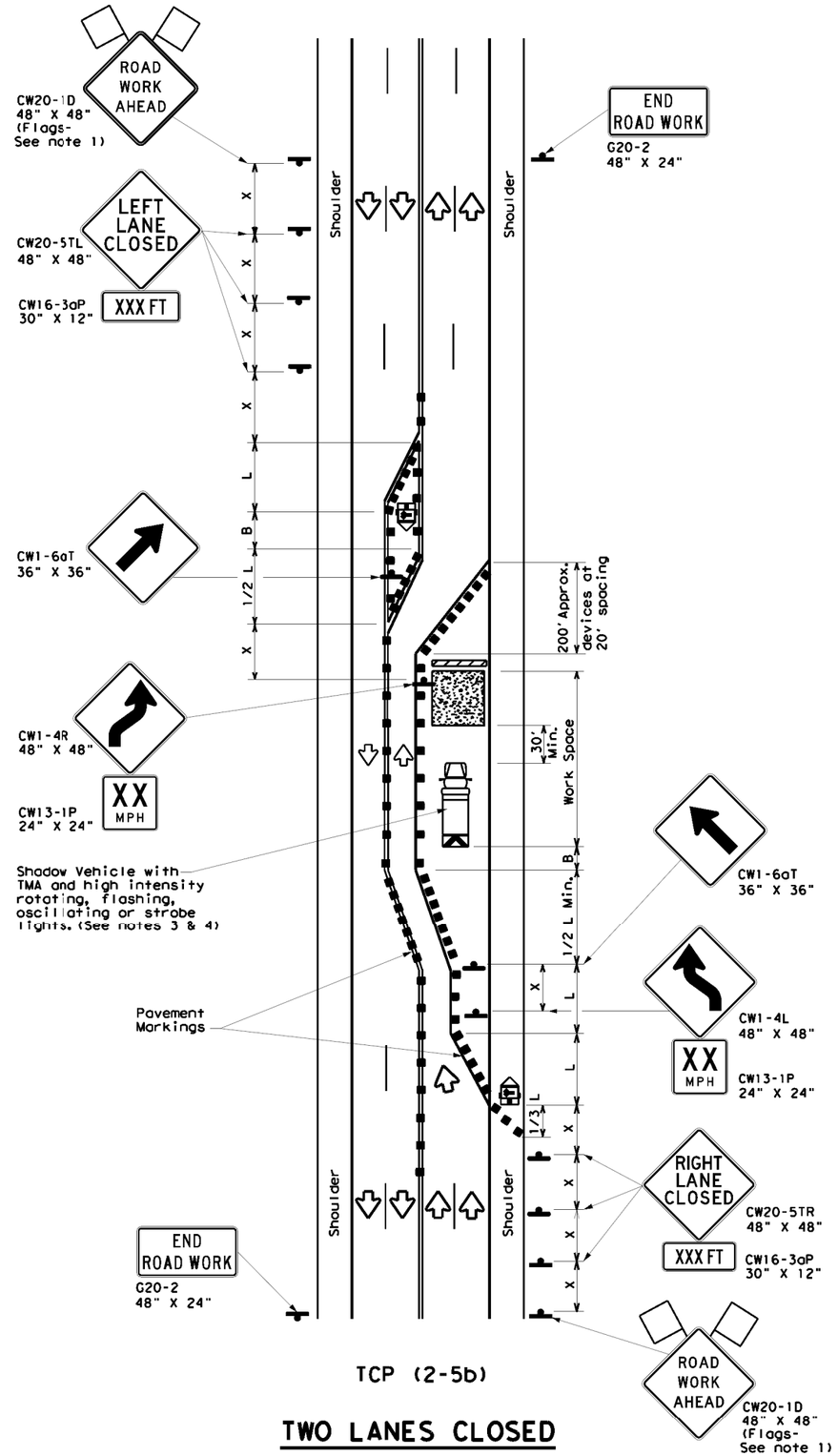

TCP (2-5b)

TWO LANES CLOSED

LEGEND

	Type 3 Barricade		Channelizing Devices
	Heavy Work Vehicle		Truck Mounted Attenuator (TMA)
	Trailer Mounted Flashing Arrow Board	M	Portable Changeable Message Sign (PCMS)
	Sign		Traffic Flow
	Flag		Flagger

Posted Speed *	Formula	Minimum Desirable Taper Lengths ** 10' Offset	11' Offset	12' Offset	Suggested Maximum Spacing of Channelizing Devices On a Taper	On a Tangent	Minimum Sign Spacing "X" Distance	Suggested Longitudinal Buffer Space "B"
30	$L = \frac{WS^2}{60}$	150'	165'	180'	30'	60'	120'	90'
35		205'	225'	245'	45'	70'	160'	120'
40		265'	295'	320'	40'	80'	240'	155'
45	L = WS	450'	495'	540'	45'	80'	320'	155'
50		500'	550'	600'	50'	100'	400'	240'
55		550'	605'	660'	55'	110'	500'	295'
60		600'	660'	720'	60'	120'	500'	350'
65		650'	715'	780'	65'	130'	700'	410'
70		700'	770'	840'	70'	140'	800'	475'
75		750'	825'	900'	75'	150'	900'	540'

* Conventional Roads Only
** Taper lengths have been rounded off.
L=Length of Taper(FT) W=Width of Offset(FT) S=Posted Speed(MPH)

TYPICAL USAGE

MOBILE	SHORT DURATION	SHORT TERM STATIONARY	INTERMEDIATE TERM STATIONARY	LONG TERM STATIONARY
			✓	✓

GENERAL NOTES

1. Flags attached to signs where shown, are REQUIRED.
2. All traffic control devices illustrated are REQUIRED, except those denoted with the triangle symbol may be omitted when stated elsewhere in the plans, or for routine maintenance work, when approved by the Engineer.
3. A Shadow Vehicle with a TMA should be used anytime it can be positioned 30 to 100 feet in advance of the area of crew exposure without adversely affecting the performance or quality of the work. If workers are no longer present but road or work conditions require the traffic control to remain in place, Type 3 Barricades or other channelizing devices may be substitutued for the Shadow Vehicle and TMA.
4. Additional Shadow Vehicles with TMAs may be positioned in each closed lane, on the shoulder or off the paved surface, next to those shown in order to protect a wider work space.
5. The downstream taper is optional. When used, it should be 100 feet approximately per lane, with channelizing devices spaced at 20 feet.

TCP (2-5a)

6. If this TCP is used for a left lane closure, CW20-5TL "LEFT LANE CLOSED" signs shall be used and channelizing devices shall be placed on the centerline to protect the work space from opposing traffic, with the arrow board placed in the closed lane near the end of the merging taper.

TCP (2-5b)

7. Conflicting pavement markings shall be removed for long-term projects.

Texas Department of Transportation — Traffic Operations Division Standard

TRAFFIC CONTROL PLAN LONG TERM LANE CLOSURES MULTILANE CONVENTIONAL RDS.

TCP(2-5)-18

FILE: tcp2-5-18.dgn	DN:	CK:	DW:	CK:
©TxDOT December 1985	CONT	SECT	JOB	HIGHWAY
REVISIONS 8-95 2-12	0922	33	076	CS
1-97 3-03	DIST		COUNTY	SHEET NO.
4-98 2-18	LRD		WEBB	54

DATE:
FILE:

DISCLAIMER:
The use of this standard is governed by the "Texas Engineering Practice Act". No warranty of any kind is made by TxDOT for any purpose whatsoever. TxDOT assumes no responsibility for the conversion of this standard to other formats or for incorrect results or damages resulting from its use.

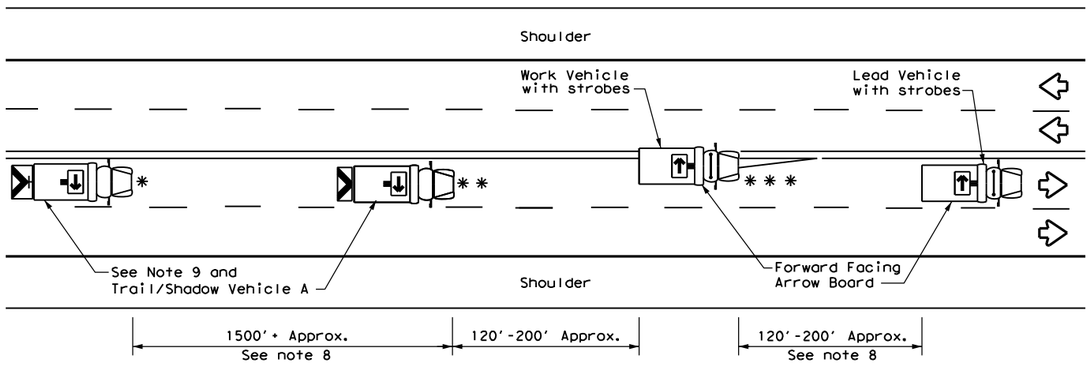

TCP (3-1a)

UNDIVIDED MULTILANE ROADWAY

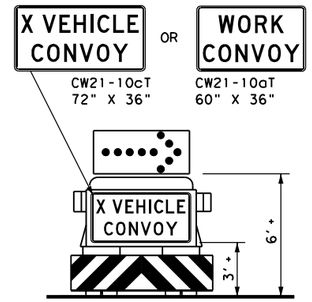

TRAIL/SHADOW VEHICLE A

with RIGHT Directional display Flashing Arrow Board

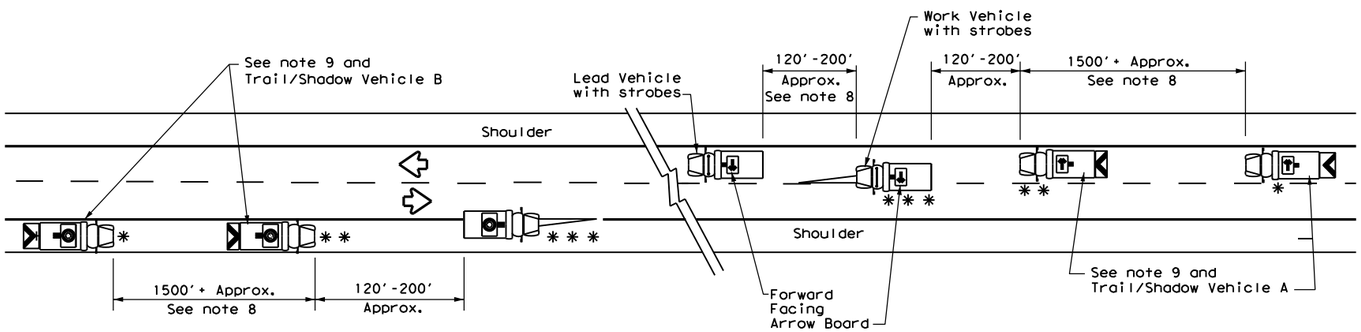

WORK ON SHOULDER

WORK ON TRAVEL LANE

TCP (3-1b)

TWO-WAY ROADWAY WITH PAVED SHOULDERS

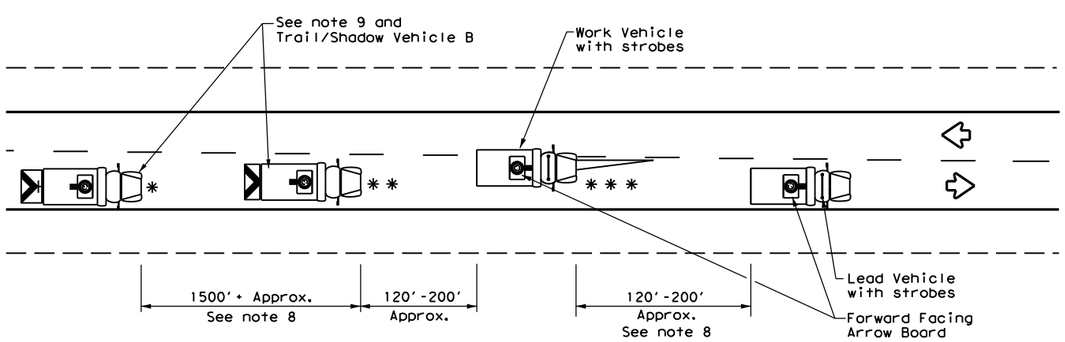

TCP (3-1c)

TWO-WAY ROADWAY WITHOUT PAVED SHOULDERS

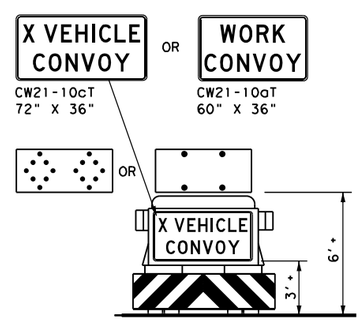

TRAIL/SHADOW VEHICLE B

with Flashing Arrow Board in CAUTION display

LEGEND

*	Trail Vehicle	ARROW BOARD DISPLAY	
* *	Shadow Vehicle		
* * *	Work Vehicle		RIGHT Directional
	Heavy Work Vehicle		LEFT Directional
	Truck Mounted Attenuator (TMA)		Double Arrow
	Traffic Flow		CAUTION (Alternating Diamond or 4 Corner Flash)

TYPICAL USAGE				
MOBILE	SHORT DURATION	SHORT TERM STATIONARY	INTERMEDIATE TERM STATIONARY	LONG TERM STATIONARY
✓				

GENERAL NOTES

1. TRAIL, SHADOW, and LEAD vehicles shall be equipped with arrow boards as illustrated. When a LEAD vehicle is not used the WORK vehicle must be equipped with an arrow board. The Engineer will determine if the LEAD VEHICLE and/or TRAIL VEHICLE are required based on prevailing roadway conditions, traffic volume, and sight distance restrictions.
2. The use of amber high intensity rotating, flashing, oscillating, or strobe lights on vehicles are required. Blue high intensity rotating, flashing, oscillating or strobe lights when mounted on the driver's side of the vehicle may be operated simultaneously with the amber beacons or strobe lights.
3. The use of truck mounted attenuators (TMA) on the SHADOW VEHICLE and TRAIL VEHICLE are required.
4. Reflective sheeting on the rear of the TMA shall meet or exceed the reflectivity and color requirements of DEPARTMENTAL MATERIAL SPECIFICATION DMS 8300, Type A.
5. Flashing arrow boards shall be Type B or Type C as per the Barricade and Construction (BC) standards. The board shall be controlled from inside the vehicle.
6. Each vehicle shall have two-way radio communication capability.
7. When work convoys must change lanes, the TRAIL VEHICLE should change lanes first to shadow the other convoy vehicles.
8. Vehicle spacing between the TRAIL VEHICLE and the SHADOW VEHICLE will vary depending on sight distance restrictions. Motorists approaching the work convoy should be able to see the TRAIL VEHICLE in time to slow down and/or change lanes as they approach the TRAIL VEHICLE. Vehicle spacing between the WORK VEHICLE and SHADOW VEHICLE and vehicle spacing between WORK VEHICLE and LEAD VEHICLE may vary according to terrain, work activity and other factors.
9. "X VEHICLE CONVOY" (CW21-10cT) or "WORK CONVOY" (CW21-10aT) signs shall be used on TRAIL VEHICLES and SHADOW VEHICLES as shown. As an option 48" X 48" diamond shaped "WORK CONVOY"(CW21-10T) or "X VEHICLE CONVOY" (CW21-10bT) signs may be used where adequate mounting space exists. When used, the X VEHICLE CONVOY sign shall have the number of the convoy vehicles displayed on the sign in the number designation "X" location. The "X VEHICLE CONVOY" sign shall not be used on the SHADOW VEHICLE if a TRAIL VEHICLE is used.
10. On two-lane two-way roadways, the work and protection vehicles should pull over periodically to allow motor vehicle traffic to pass. If motorists are not allowed to pass the work convoy, a "DO NOT PASS" (R4-1) sign should be placed on the back of the rearmost protection vehicle.

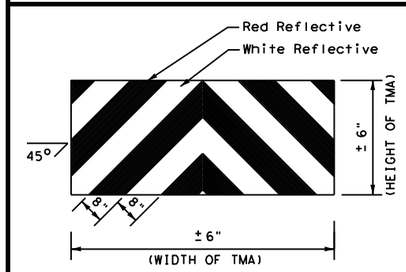

STRIPING FOR TMA

Texas Department of Transportation

Traffic Operations Division Standard

TRAFFIC CONTROL PLAN MOBILE OPERATIONS UNDIVIDED HIGHWAYS

TCP(3-1)-13

FILE: tcp3-1.dgn	DN: TxDOT	CK: TxDOT	DW: TxDOT	CK: TxDOT
© TxDOT December 1985	CONT	SECT	JOB	HIGHWAY
REVISIONS 2-94 4-98 8-95 7-13 1-97	0922	33	076	CS
	DIST	COUNTY		SHEET NO.
	LRD	WEBB		55

DATE:
FILE:

DISCLAIMER:
The use of this standard is governed by the "Texas Engineering Practice Act". No warranty of any kind is made by TxDOT for any purpose whatsoever. TxDOT assumes no responsibility for the conversion of this standard to other formats or for incorrect results or damages resulting from its use.

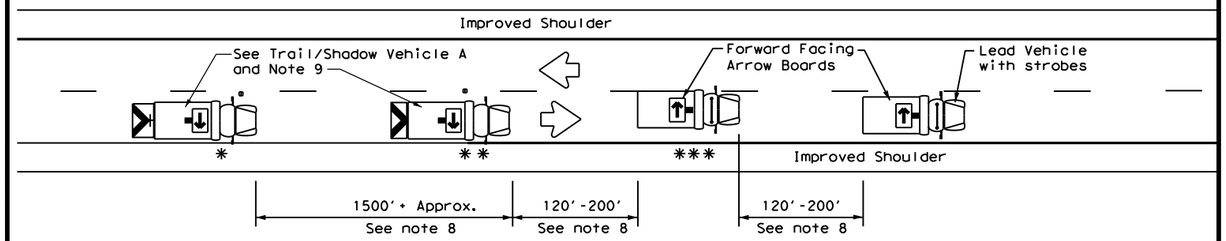

TCP (3-3a)

TWO LANE HIGHWAY WITH PAVED SHOULDERS (WORK ON TRAVEL LANE)

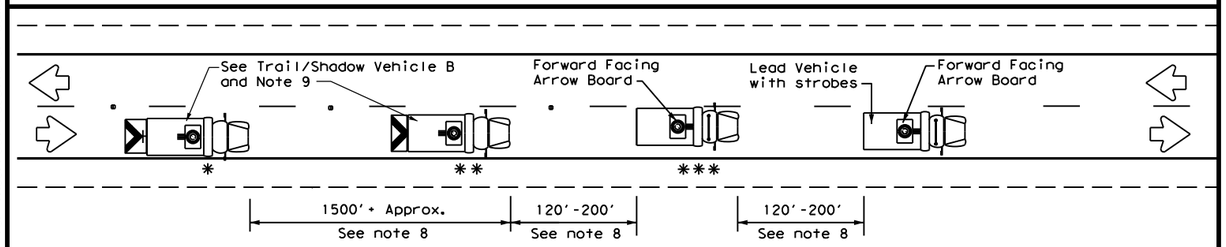

TCP (3-3b)

TWO LANE HIGHWAY WITHOUT PAVED SHOULDERS (WORK ON TRAVEL LANE)

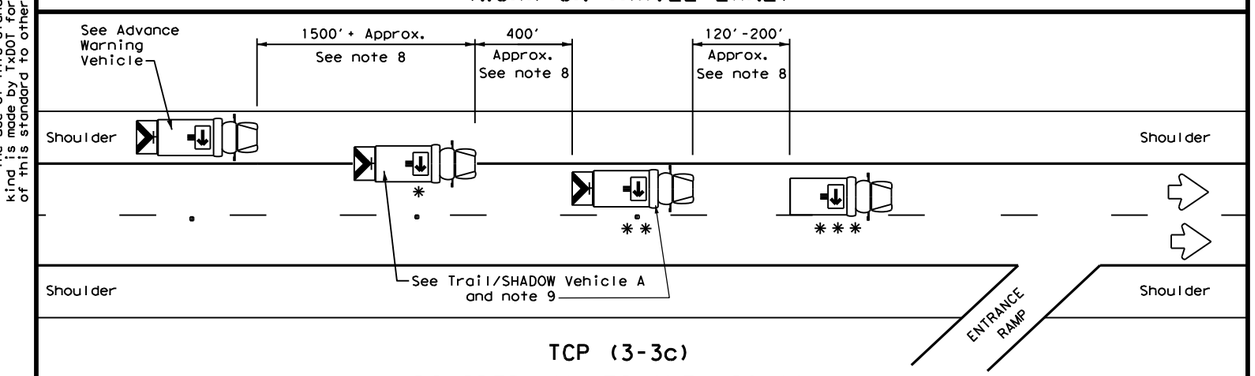

TCP (3-3c)

DIVIDED MULTILANE HIGHWAY

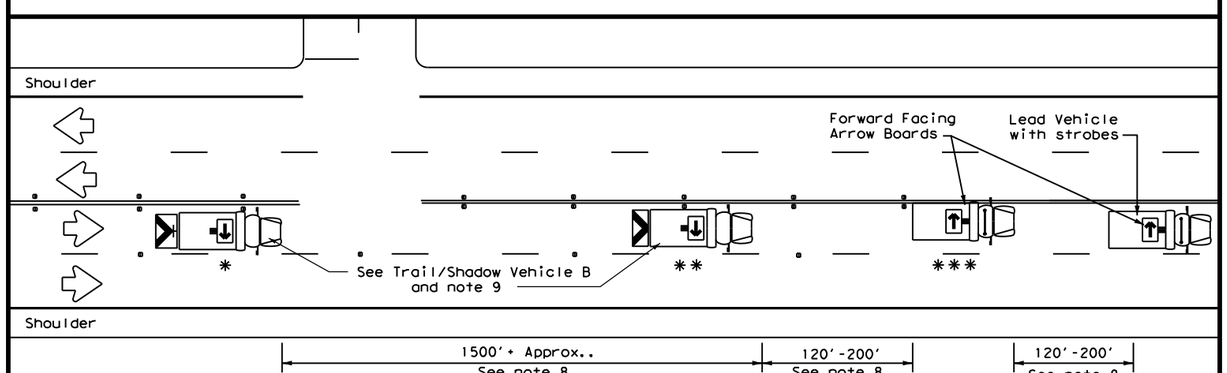

TCP (3-3d)

UNDIVIDED MULTILANE HIGHWAY

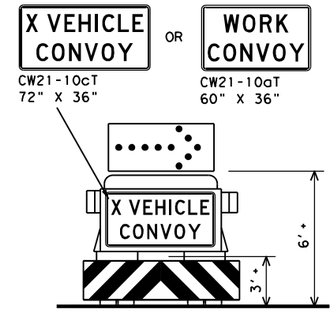

TRAIL/SHADOW VEHICLE A

with RIGHT Directional display
Flashing Arrow Board

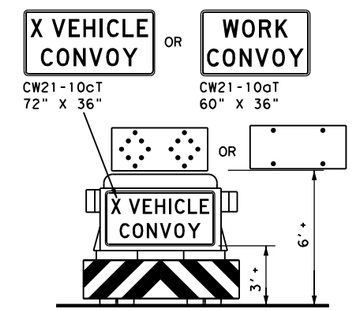

TRAIL/SHADOW VEHICLE B

with Flashing Arrow Board
in Caution Mode

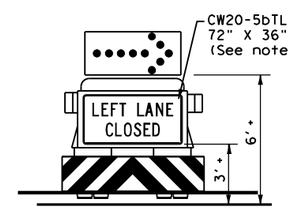

ADVANCE WARNING VEHICLE

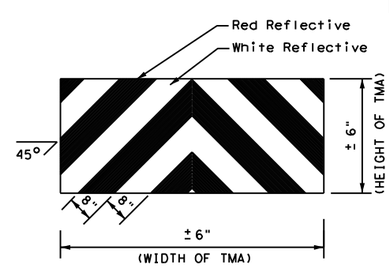

STRIPING FOR TMA

LEGEND

*	Trail Vehicle	ARROW BOARD DISPLAY	
**	Shadow Vehicle		
***	Work Vehicle		RIGHT Directional
	Heavy Work Vehicle		LEFT Directional
	Truck Mounted Attenuator (TMA)		Double Arrow
	Traffic Flow		CAUTION (Alternating Diamond or 4 Corner Flash)

TYPICAL USAGE				
MOBILE	SHORT DURATION	SHORT TERM STATIONARY	INTERMEDIATE TERM STATIONARY	LONG TERM STATIONARY
✓				

GENERAL NOTES

1. TRAIL, SHADOW, and LEAD vehicles shall be equipped with arrow boards as illustrated. When a LEAD vehicle is not used on two way roads the WORK vehicle must have an arrow board. For divided roadways, the arrow board on the WORK vehicle is optional based on the type of work being performed. The Engineer will determine if the LEAD vehicle and/or TRAIL vehicle are required based on prevailing roadway conditions, traffic volume, and sight distance restrictions.
2. The use of amber high intensity rotating, flashing, oscillating, or strobe lights on vehicles are required. Blue high intensity rotating, flashing, oscillating, or strobe lights when mounted on the driver's side of the vehicle may be operated simultaneously with the amber beacons or strobe lights.
3. The use of truck mounted attenuators (TMA) on the SHADOW VEHICLE, ADVANCE WARNING and TRAIL VEHICLE are required.
4. Reflective sheeting on the rear of the TMA shall meet or exceed the reflectivity and color requirements of DEPARTMENTAL MATERIAL SPECIFICATION DMS 8300, Type A.
5. Flashing arrow boards shall be Type B or Type C as per the Barricade and Construction (BC) standards. The board shall be controlled from inside the vehicle.
6. Each vehicle shall have two-way radio communication capability.
7. When work convoys must change lanes, the TRAIL VEHICLE should change lanes first to shadow the other convoy vehicles.
8. Vehicle spacing between the TRAIL VEHICLE and the SHADOW VEHICLE will vary depending on sight distance restrictions. Motorists approaching the convoy should be able to see the TRAIL VEHICLE in time to slow down and/or change lanes as they approach the TRAIL VEHICLE. Vehicle spacing between the WORK VEHICLE and SHADOW VEHICLE and vehicle spacing between WORK VEHICLE and LEAD VEHICLE may vary according to terrain, work activity and other factors.
9. X VEHICLE CONVOY (CW21-10cT) or WORK CONVOY (CW21-10aT) signs shall be used on TRAIL VEHICLES and SHADOW VEHICLES as shown. As an option 48" x 48" diamond shaped WORK CONVOY (CW21-10T) or X VEHICLE CONVOY (CW21-10bT) signs may be used where adequate mounting space exists. When used, the X VEHICLE CONVOY sign shall have the number of the convoy vehicles displayed on the sign in the number designation "X" location. The X VEHICLE CONVOY sign shall not be used on the SHADOW VEHICLE if a TRAIL VEHICLE is used.
10. For divided highways with two or three lanes in one direction, the appropriate LEFT LANE CLOSED (CW20-5bTL), RIGHT LANE CLOSED (CW20-5bTR), or CENTER LANE CLOSED (CW20-5dT) sign should be used on the Advance Warning Vehicle. As an option, a portable changeable message sign (PCMS) or truck mounted changeable message sign (TMCMS) with a minimum character height of 12", and displaying the same legend may be substituted for these signs. An appropriate directional arrow display, simulating the size and legibility of the flashing arrow board may be used in the second phase of the PCMS/TMCMS message. When this is done, the arrow board will not be required on the Advance Warning Vehicle.
11. A double arrow shall not be displayed on the arrow board on the Advance Warning Vehicle.
12. For divided highways with three or four lanes in each direction, use TCP(3-2).
13. Standard diamond shape versions of the CW20-5 series signs may be used as an option if the rectangular signs shown are not available.
14. The Advance Warning Vehicle may straddle the edgeline when Shoulder width makes it necessary.
15. On two-lane two-way roadways, the work and protection vehicles should pull over periodically to allow motor vehicle traffic to pass. If motorists are not allowed to pass the work convoy, a DO NOT PASS (R4-1) sign should be placed on the back of the rearmost protection vehicle.

Texas Department of Transportation

Traffic Operations Division Standard

TRAFFIC CONTROL PLAN MOBILE OPERATIONS RAISED PAVEMENT MARKER INSTALLATION/ REMOVAL

TCP(3-3)-14

FILE: tcp3-3.dgn	DN: TxDOT	CK: TxDOT	DW: TxDOT	CK: TxDOT
© TxDOT September 1987	CONT	SECT	JOB	HIGHWAY
REVISIONS	0922	33	076	CS
2-94 4-98	DIST		COUNTY	SHEET NO.
8-95 7-13				
1-97 7-14	LRD		WEBB	56

DATE:
FILE:

DISCLAIMER:
The use of this standard is governed by the "Texas Engineering Practice Act". No warranty of any kind is made by TxDOT for any purpose whatsoever. TxDOT assumes no responsibility for the conversion of this standard to other formats or for incorrect results or damages resulting from its use.

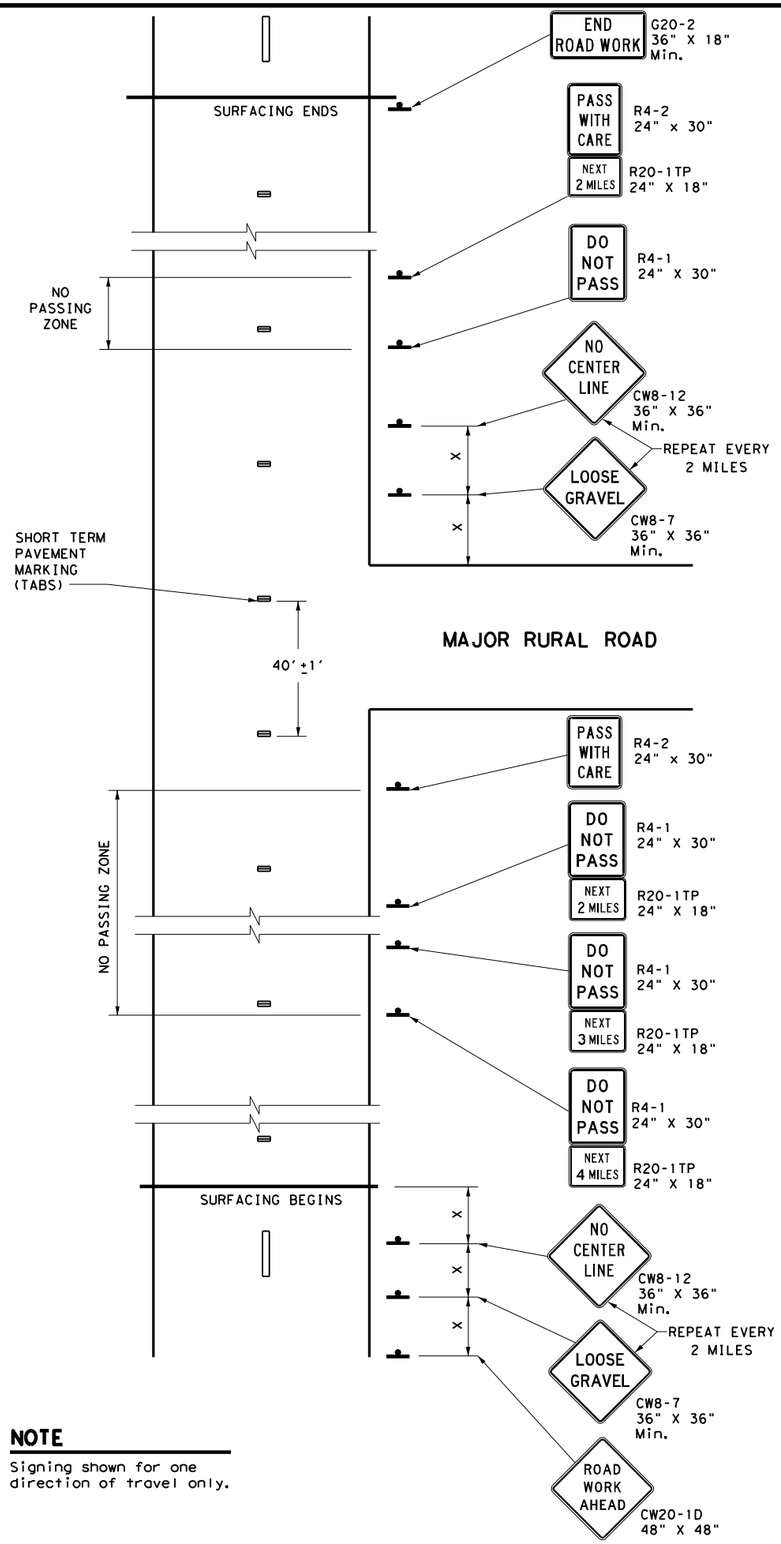

NOTE

Signing shown for one direction of travel only.

NO PASSING ZONES ON TWO-LANE TWO-WAY ROADS

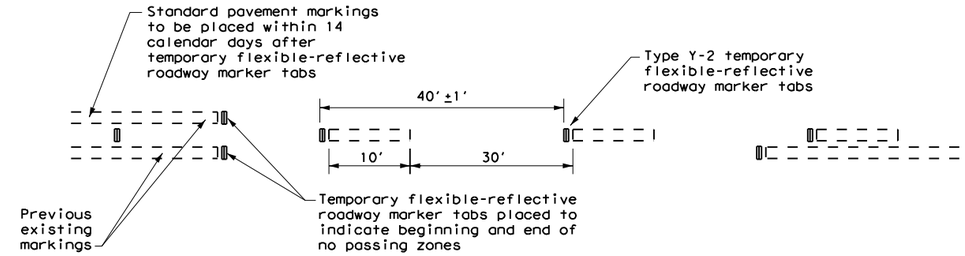

TABS ON CENTERLINES OF TWO-LANE TWO-WAY ROADS

For seal coat, micro-surface or similar operations

"DO NOT PASS" SIGN (R4-1) and NO-PASSING ZONES

A. Prior to the beginning of construction, all currently striped no-passing zones shall be signed with the DO NOT PASS (R4-1) signs and PASS WITH CARE (R4-2) signs placed at the beginning and end of each zone for each direction of travel except as otherwise provided herein. Signs marking these individual no-passing zones need not be covered prior to construction if the signs supplement the existing pavement markings.

B. At the discretion of the Engineer, in areas of numerous no-passing zones, several zones may be combined as a single zone. If passing is to be prohibited over one or more lengthy sections, a DO NOT PASS sign and a NEXT XX MILES (R20-1TP) plaque may be used at the beginning of such zones. The DO NOT PASS sign and the NEXT XX MILES plaque should be repeated every mile to the end of the no-passing zone. In areas where there is considerable distance between no-passing zones, the end of the no-passing zone may be signed with a PASS WITH CARE sign and a NEXT XX MILES plaque.

C. Depending on traffic volumes and length of sections, it may be desirable to prohibit passing throughout the project to prevent damage to windshield and lights. The DO NOT PASS sign and NEXT XX MILES plaque should be used and repeated as often as necessary for this purpose. Where several existing zones are to be combined into one individual no-passing zone, the sign at the beginning of the zone should be covered until the surfacing operation has passed this location so as not to have the DO NOT PASS sign conflict with the existing pavement markings. Also, unless one days operation completes the entire length of such combined zones, appropriate DO NOT PASS and PASS WITH CARE signs should be placed at the beginning and end of the no-passing zones where the surfacing operation has stopped for the day.

D. R4-1 and R4-2 are to remain in place until standard pavement markings are installed.

"NO CENTER LINE" SIGN (CW8-12)

A. Center line markings are yellow pavement markings that delineate the separation of travel lanes that have opposite directions of travel on a roadway. Divided highways do not typically have center line markings.

B. At the time construction activity obliterates the existing center line markings(low volume roads may not have an existing centerline), a NO CENTER LINE (CW8-12) sign should be erected at the beginning of the work area, at approximately 2 mile intervals within the work area, beyond major intersections and other locations deemed necessary by the Engineer.

C. The NO CENTER LINE signs are to remain in place until standard pavement markings are installed.

"LOOSE GRAVEL" SIGN (CW8-7)

A. When construction begins, a LOOSE GRAVEL (CW8-7) sign should be erected at each end of the work area and repeated at intervals of approximately 2 miles in rural areas and closer in urban areas.

B. The LOOSE GRAVEL signs are to remain in place until the condition no longer exists.

PAVEMENT MARKINGS

A. Temporary markings for surfacing projects shall be Temporary Flexible-reflective Roadway Marker Tabs unless otherwise approved by the Engineer. Tabs are to be installed to provide true alignment for striping crews or as directed by the Engineer. Tabs will be placed at the spacing indicated. Tabs should be applied to the pavement
no more than two (2) days before the surfacing is applied. After the surfacing is rolled and swept, the cover over the reflective strip shall be removed.

B. Tabs shall not be used to simulate edge lines.

C. Tab placement for overlay/inlay operations shall be as shown on the WZ(STPM) standard sheet.

COORDINATION OF SIGN LOCATIONS

A. The location of warning signs at the beginning and end of a work area are to be coordinated with other signing typically shown on the Barricade and Construction Standards for project limits to ensure adequate sign spacing.

B. Where possible the ROAD WORK AHEAD (CW20-1D), LOOSE GRAVEL (CW8-7), and NO CENTER LINE (CW8-12) signs should be placed in the sequence shown following the OBEY WARNING SIGNS STATE LAW (R20-3T) and the TRAFFIC FINES DOUBLE (R20-5T) sign, and one "X" sign spacing prior to the CONTRACTOR (G20-6T)sign typically located at or near the limits of surfacing. LOOSE GRAVEL and NO CENTER LINE signs will then be repeated as described above.

Posted Speed *	Minimum Sign Spacing "X" Distance
30	120'
35	160'
40	240'
45	320'
50	400'
55	500'
60	600'
65	700'
70	800'
75	900'

* Conventional Roads Only

TYPICAL USAGE				
MOBILE	SHORT DURATION	SHORT TERM STATIONARY	INTERMEDIATE TERM STATIONARY	LONG TERM STATIONARY
			✓	✓

GENERAL NOTES

1. The traffic control devices detailed on this sheet will be furnished and erected as directed by the Engineer on sections of roadway where tabs must be placed prior to the surfacing operation which will cover or obliterate the existing pavement markings.

2. The devices shown on this sheet are to be used to supplement those required by the BC Standards or others required elsewhere in the plans.

3. Signs shall be erected as detailed on the BC Standards or the Compliant Work Zone Traffic Control Devices List (CWZTCD) on supports approved for Long-Term / Intermediate-Term Work Zone Sign Supports.

4. When surfacing operations take place on divided highways, freeways or expressways, the size of diamond shaped construction warning signs shall be 48" x 48".

5. Signs on divided highways, freeways and expressways will be placed on both right and left sides of the roadway based on roadway conditions as directed by the Engineer.

Texas Department of Transportation — Traffic Operations Division Standard

TRAFFIC CONTROL DETAILS FOR SURFACING OPERATIONS

TCP(7-1)-13

FILE: tcp7-1.dgn	DN: TxDOT	CK: TxDOT	DW: TxDOT	CK: TxDOT
©TxDOT March 1991	CONT	SECT	JOB	HIGHWAY
REVISIONS	0922	33	076	CS
4-92 4-98	DIST		COUNTY	SHEET NO.
1-97 7-13	LRD		WEBB	57

DATE:
FILE:

DISCLAIMER:
The use of this standard is governed by the "Texas Engineering Practice Act". No warranty of any kind is made by TxDOT for any purpose whatsoever. TxDOT assumes no responsibility for the conversion of this standard to other formats or for incorrect results or damages resulting from its use.

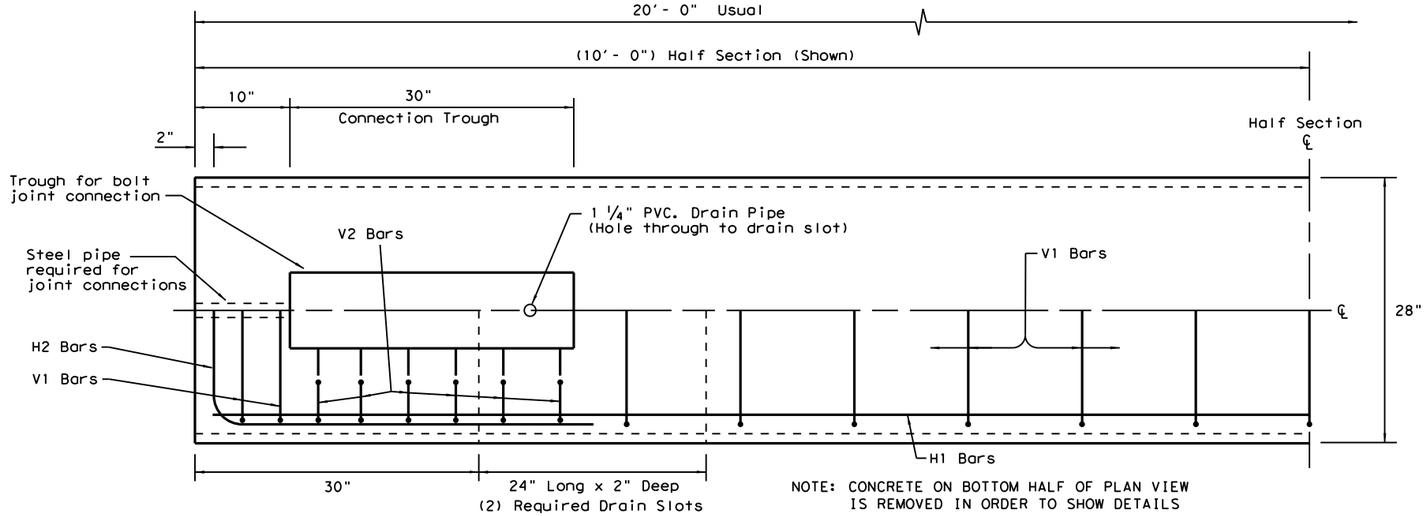

NOTE: CONCRETE ON BOTTOM HALF OF PLAN VIEW IS REMOVED IN ORDER TO SHOW DETAILS

PLAN
(TYPE 1) BARRIER SEGMENT
(SYMMETRICAL ABOUT CENTER LINES)

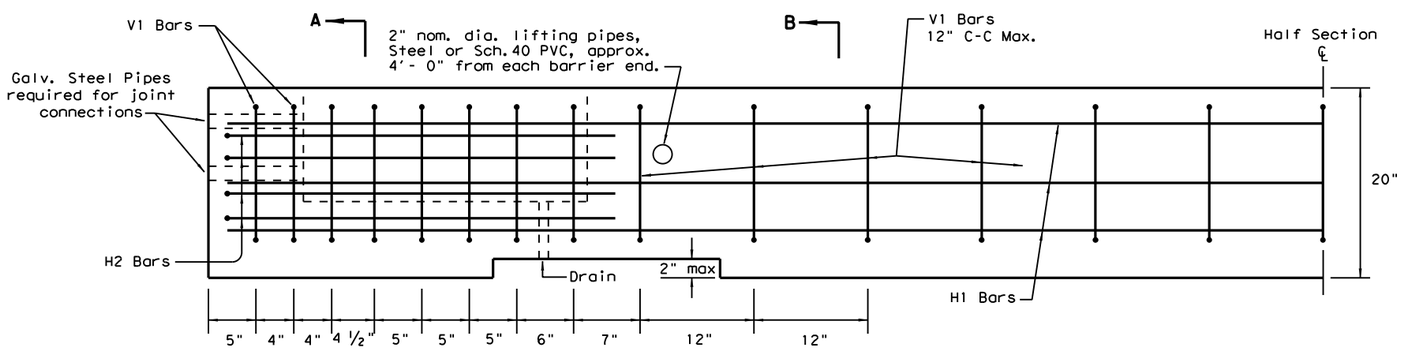

ELEVATION
(TYPE 1) BARRIER SEGMENT
(SYMMETRICAL ABOUT CENTER LINES)

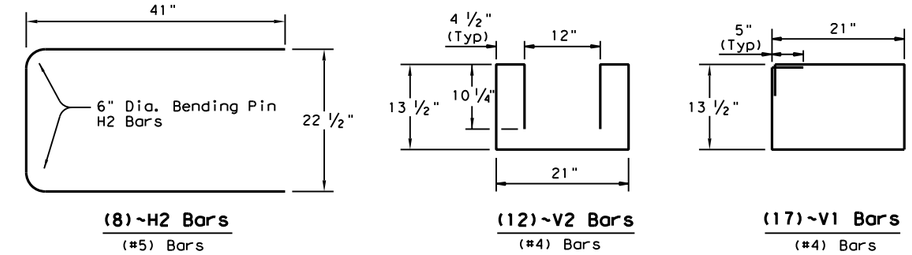

REINFORCING STEEL DETAILS
TYPE 1 - BARRIER SEGMENT

Note: Use 2" Dia. Bending Pin, unless otherwise shown

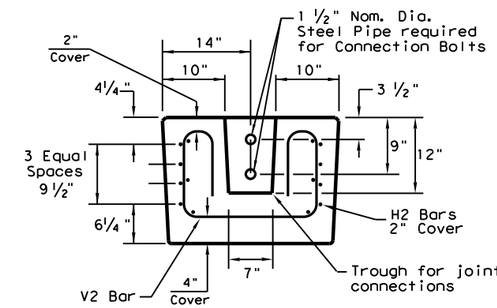

SECTION A-A

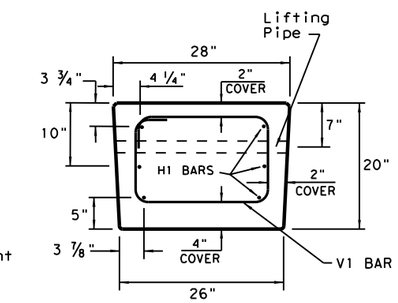

SECTION B-B

GENERAL NOTES

1. Low Profile Concrete Barrier (LPCB), is approved for use in temporary work zone locations, where the posted speed is 45 mph, or less.
2. Concrete shall be Class H for precast barrier with a minimum compressive strength of 3,600 psi.
3. Where used, rebar reinforcement shall be Grade 60 and conform to ASTM A615.
4. Precast LPCB barrier length shall be 20 ft.
5. All barrier edges shall have ¾" chamfer or a tooled radius.
6. Joint connection hardware shall be in accordance with Item 449, "Anchor Bolts." and is considered subsidiary.
7. Steel pipe required for joint connection bolts shall be galvanized in accordance with Item 445, "Galvanizing."
8. Welded wire reinforcement (WWR) may be used in lieu of conventional reinforcement for Type 1 barrier, and shall meet the requirements shown.

FOR CONTRACTORS INFORMATION ONLY

(TYPE 1) APPROX. QUANTITIES 20 FT. SECTION		
CONCRETE	CY	2.6
REINFORCING STEEL	LBS	330
TOTAL BARRIER WT.	LBS	11000

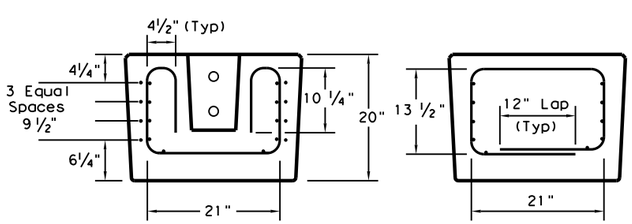

SECTION A-A SECTION B-B

(WWR) GENERAL NOTES

1. Deformed Welded Wire Reinforcement shall conform to ASTM A497.
2. Welded wire cage may be cut or bent, if necessary, but must be approved by the Engineer.
3. Combinations of reinforcing steel and WWR are permitted, as directed by the Engineer. The dimensions from the end of the barrier section to the first wire shall not exceed 3".

REQUIRED (WWR) WIRE DESIGN

8 ~ (D31) Horizontal Wires (Equally spaced)
10 ~ (D20) Horizontal Wires (Equally spaced)
29 ~ (D20) Vertical Wires (Spaced as shown in Elevation View)

WELDED WIRE REINFORCEMENT (WWR)- OPTIONAL REINFORCING

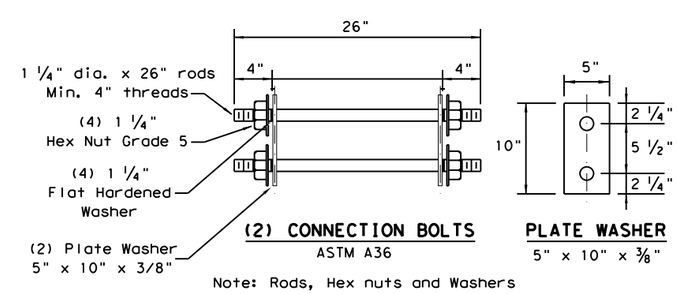

(2) CONNECTION BOLTS
ASTM A36

PLATE WASHER
5" x 10" x ⅜"

Note: Rods, Hex nuts and Washers shall be Galvanized.

SHEET 1 OF 2

Texas Department of Transportation — Design Division Standard

LOW PROFILE CONCRETE BARRIER
PRECAST BARRIER (TYPE 1)
LPCB-13

FILE: lpcb13.dgn	DN: TxDOT	CK: AM	DW: VP	CK:
©TxDOT December 2010	CONT	SECT	JOB	HIGHWAY
REVISIONS	0922	33	076	CS
	DIST		COUNTY	SHEET NO.
	LRD		WEBB	58

DATE:
FILE:

DISCLAIMER:
The use of this standard is governed by the "Texas Engineering Practice Act". No warranty of any kind is made by TxDOT for any purpose whatsoever.
TxDOT assumes no responsibility for the conversion of this standard to other formats or for incorrect results or damages resulting from its use.

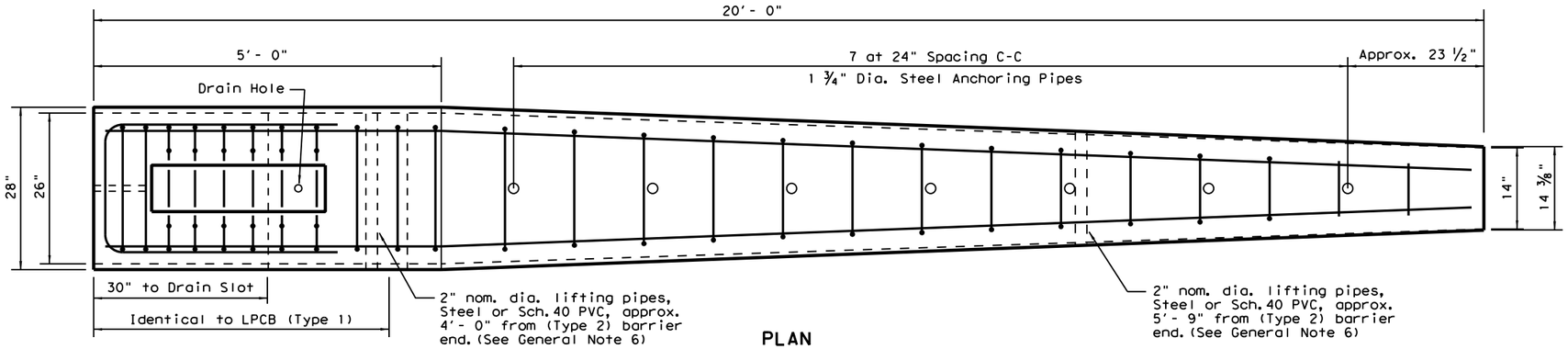

PLAN
(TYPE 2) END TERMINAL

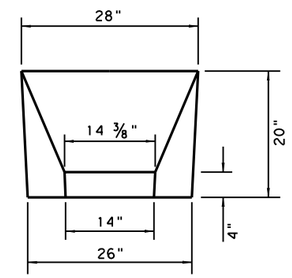

APPROACH VIEW

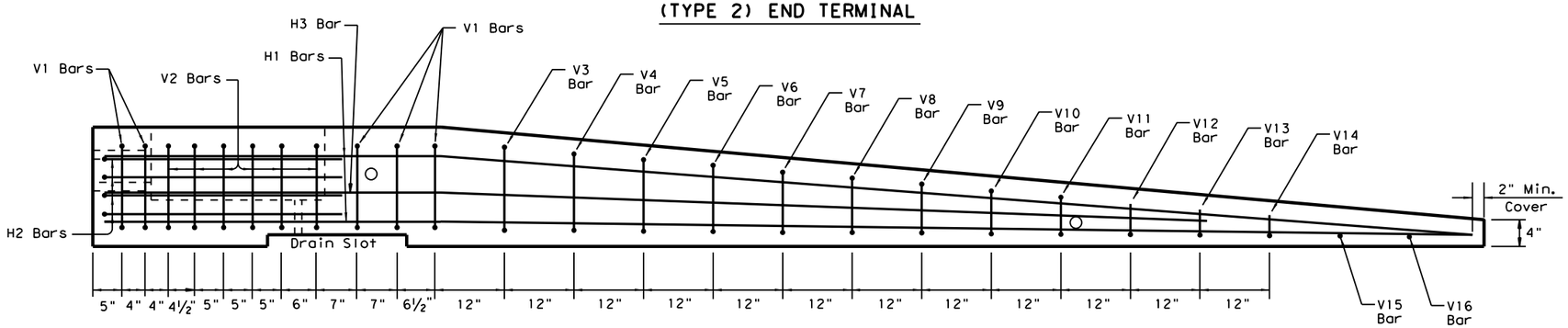

ELEVATION
(TYPE 2) END TERMINAL

Note:
Anchoring pipes not shown in Elevation View

TYPE 2 - NOTES

1. Welded wire reinforcment (WWR) is "not" an option for Type 2 Barrier.
2. Type 2 Barrier shall be used as an end treatment for the Type 1 barrier segments, when applicable.
3. The end treatment can be used without the anchor pins in locations that can accommodate approximately 4 ft. of lateral displacement of the end treatment. The use of non-pinned end treatment does not affect the performance or the deflection of the Low-Profile barrier system.
4. The anchor pins are all the same length and are to be driven flush with the top of the (Type 2) barrier surface.
5. The bends in the H3 and H1 bars are slight, no formal bend is necessary.
6. The Type 2 barrier segment must be lifted from the rear first, to prevent cracking of sloped section.
7. See LPCB sheet 1 for additional information.

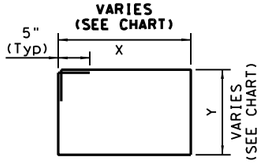

V3-V14 Bars

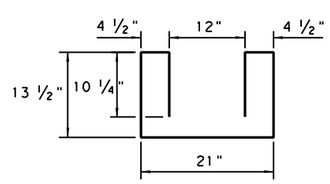

(6)~V2 Bars

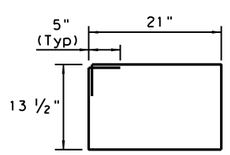

(5)~V1 Bars

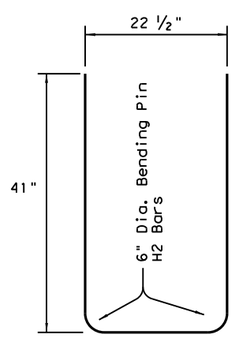

(4)~H2 Bars
(#5) Bars

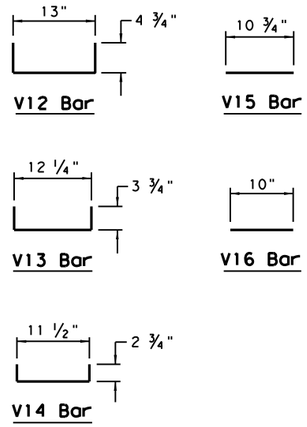

Note: All V Bars are (#4)

BAR (#4)	X (IN.)	Y (IN.)
V3 BAR	20 ¼	14 ½
V4 BAR	19 ½	13 ½
V5 BAR	18 ½	12 ¼
V6 BAR	17 ½	11 ¼
V7 BAR	17	10 ¼
V8 BAR	16 ¼	9
V9 BAR	15 ½	8
V10 BAR	14 ½	7
V11 BAR	13 ¾	6

REINFORCING STEEL DETAILS
TYPE 2 - END TERMINAL

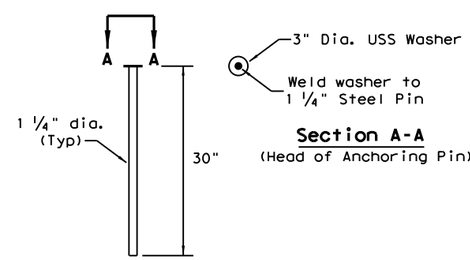

Section A-A
(Head of Anchoring Pin)

(7) Anchor Pins (See Note 3)
ASTM A36 Steel

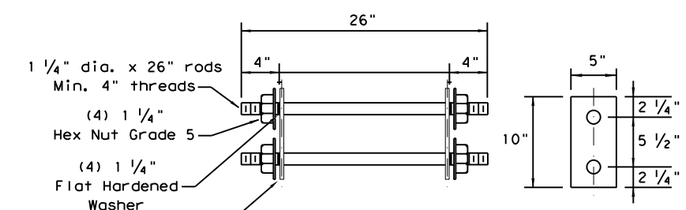

(2) CONNECTION BOLTS
ASTM A36

PLATE WASHER
5" x 10" x ⅜"

Note: Rods, Hex nuts and Washers shall be Galvanized.

Note: Use 2" Dia. Bending Pin, unless otherwise shown

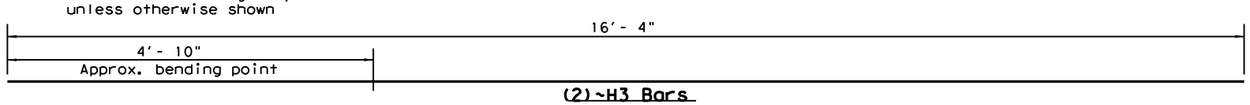

(2)~H3 Bars
(#5) Bar

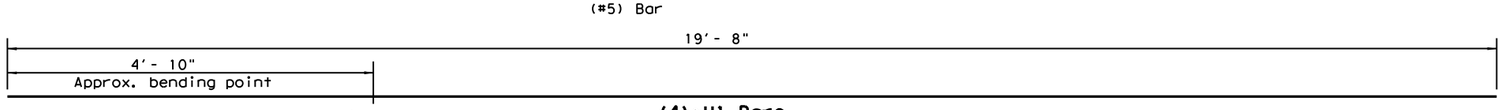

(4)~H1 Bars
(#5) Bar

Note: Bends on H1 and H3 bars are slight and do not require formal bends.

FOR CONTRACTORS INFORMATION ONLY

(TYPE 2) APPROX. QUANTITIES 20 FT. SECTION		
CONCRETE	CY	1.65
REINFORCING STEEL	LBS	240
TOTAL BARRIER WT.	LBS	7000

SHEET 2 OF 2

Texas Department of Transportation — Design Division Standard

LOW PROFILE CONCRETE BARRIER
PRECAST BARRIER (TYPE 2)
LPCB-13

FILE: lpcb13.dgn	DN: TxDOT	CK: AM	DW: VP	CK:
© TxDOT December 2010	CONT	SECT	JOB	HIGHWAY
REVISIONS	0922	33	076	CS
	DIST		COUNTY	SHEET NO.
	LRD		WEBB	59

DATE:
FILE:

DISCLAIMER:
The use of this standard is governed by the "Texas Engineering Practice Act". No warranty of any kind is made by TxDOT for any purpose whatsoever. TxDOT assumes no responsibility for the conversion of this standard to other formats or for incorrect results or damages resulting from its use.

PLOTTED ON: 7/12/2024 @ 7:41:33 PM DESIGN FILENAME: X:\data\txdot\projects\359700_LasCruces_FlechaWestLaredoCorridorII\Standards\SW3Plec116.dgn

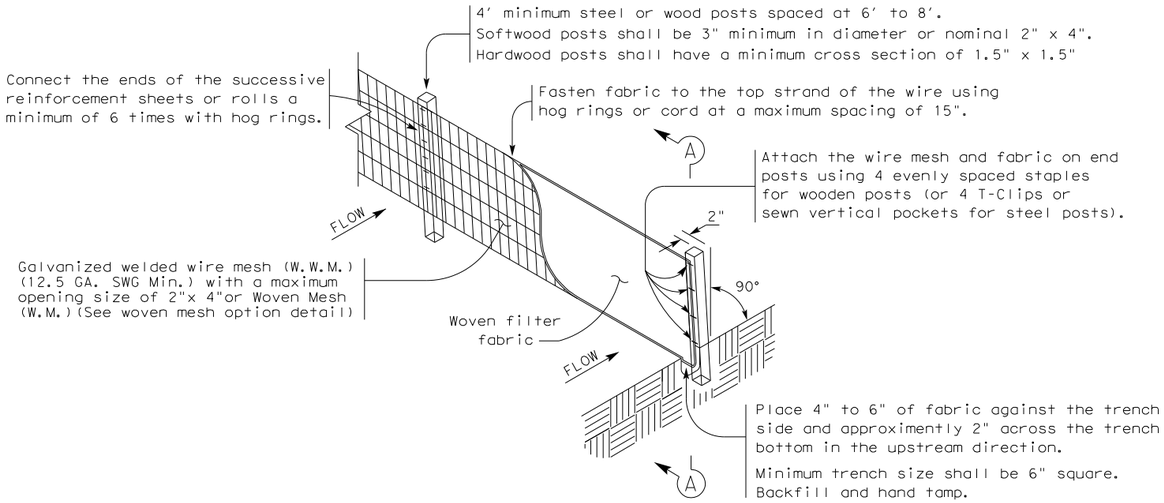

TEMPORARY SEDIMENT CONTROL FENCE

SCF

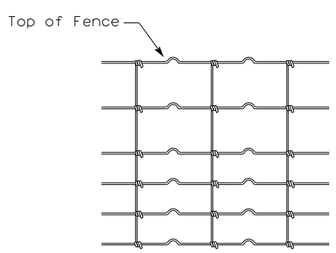

HINGE JOINT KNOT WOVEN MESH (OPTION) DETAIL

Galvanized hinge joint knot woven mesh (12.5 GA.SWG Min.) requires a minimum of five horizontal wires spaced at a maximum of 12 inches apart and all vertical wires spaced at a maximum of 12 inches apart.

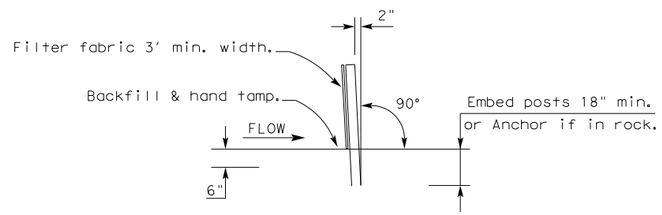

SECTION A-A

SEDIMENT CONTROL FENCE USAGE GUIDELINES

A sediment control fence may be constructed near the downstream perimeter of a disturbed area along a contour to intercept sediment from overland runoff. A 2 year storm frequency may be used to calculate the flow rate to be filtered.

Sediment control fence should be sized to filter a maximum flow through rate of 100 GPM/FT^2. Sediment control fence is not recommended to control erosion from a drainage area larger than 2 acres.

LEGEND

Sediment Control Fence

SCF

GENERAL NOTES

1. Vertical tracking is required on projects where soil distributing activities have occurred unless otherwise approved.
2. Perform vertical tracking on slopes to temporarily stabilize soil.
3. Provide equipment with a track undercarriage capable of producing linear soil impressions measuring a minimum of 12" in length by 2" to 4" in width by 1/2" to 2" in depth.
4. Do not exceed 12" between track impressions.
5. Install continous linear track impressions where the minimum 12" length impressions are perpendicular to the slope or direction of water flow.

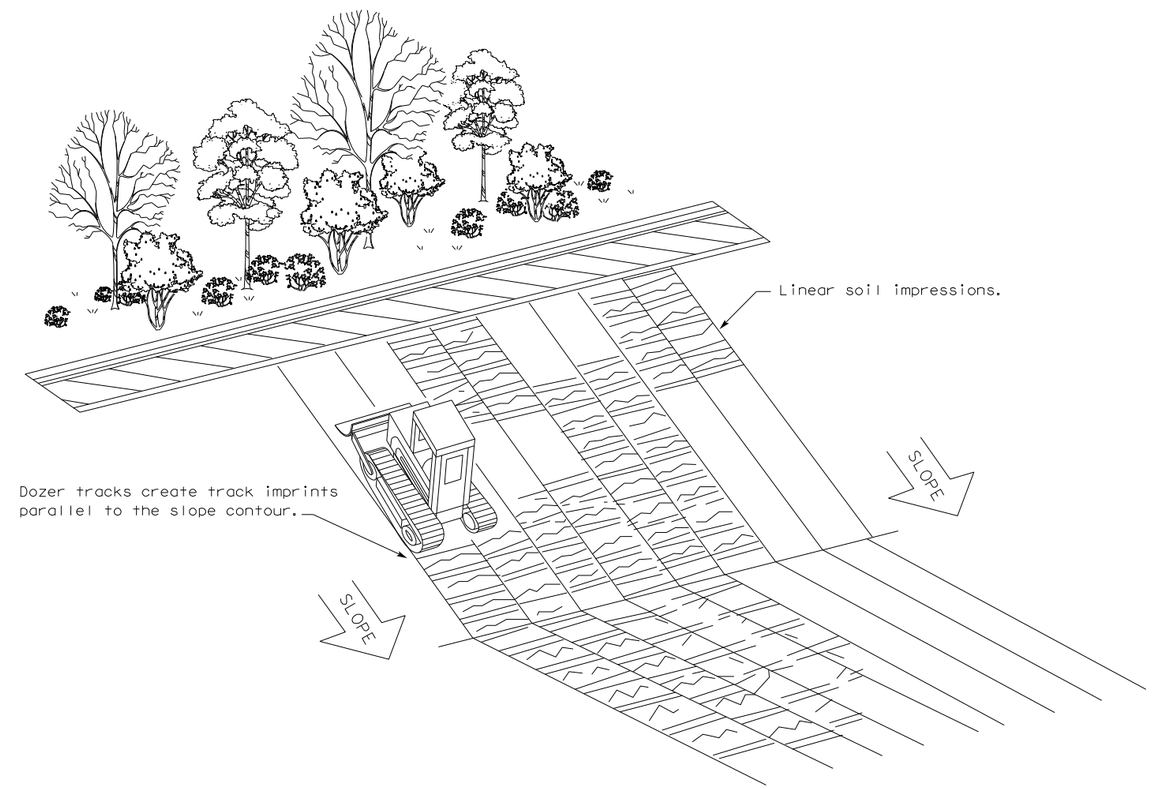

VERTICAL TRACKING

Texas Department of Transportation

Design Division Standard

TEMPORARY EROSION, SEDIMENT AND WATER POLLUTION CONTROL MEASURES

FENCE & VERTICAL TRACKING

EC(1)-16

FILE: ec116	DN: TxDOT	CK: KM	DW: VP	DN/CK: LS
©TxDOT JULY 2016	CONT	SECT	JOB	HIGHWAY
REVISIONS	0922	33	076	CS
	DIST		COUNTY	SHEET NO.
	LRD		WEBB	60

DISCLAIMER:
The use of this standard is governed by the "Texas Engineering Practice Act". No warranty of any kind is made by TxDOT for any purpose whatsoever. TxDOT assumes no responsibility for the conversion of this standard to other formats or for incorrect results or damages resulting from its use.

PLOTTED ON: 7/12/2024 @ 7:41:34 PM DESIGN FILENAME: X:\data\txdot\projects\359700_LasCruces_FlechalWestLaredoCorridorIII\Standards\SW3Plec216.dgn

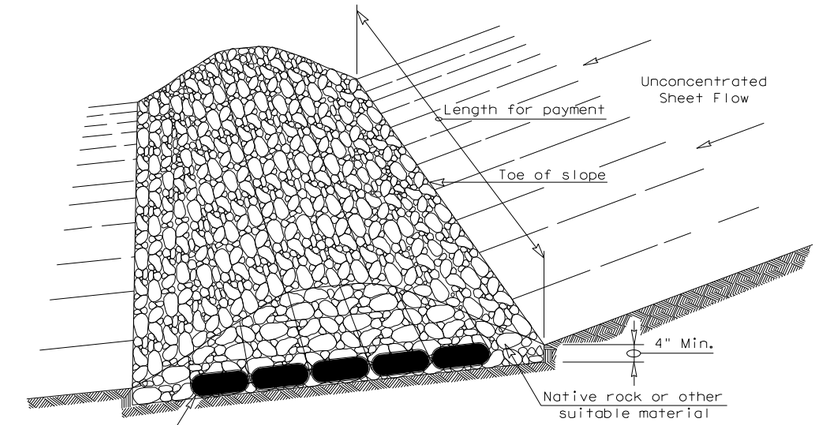

FILTER DAM AT TOE OF SLOPE

RFD1

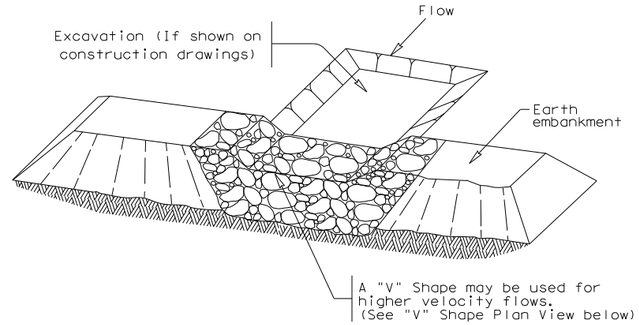

FILTER DAM AT SEDIMENT TRAP

RFD1 OR RFD2

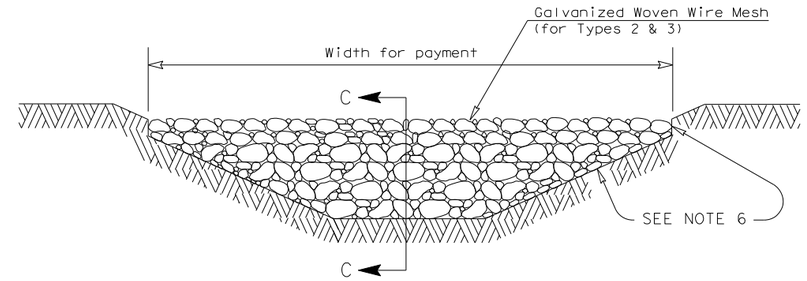

FILTER DAM AT CHANNEL SECTIONS

RFD1 OR RFD2 OR RFD3

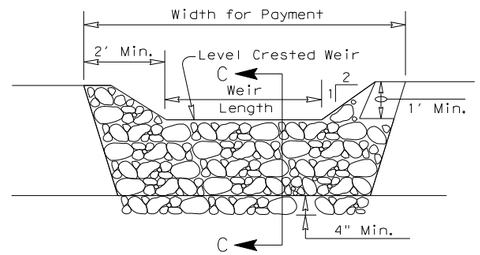

PROFILE

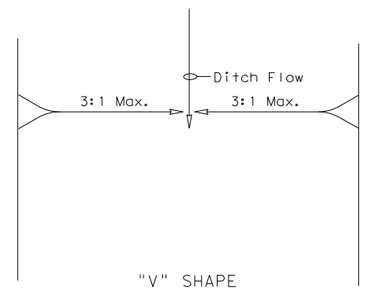

"V" SHAPE
PLAN VIEW

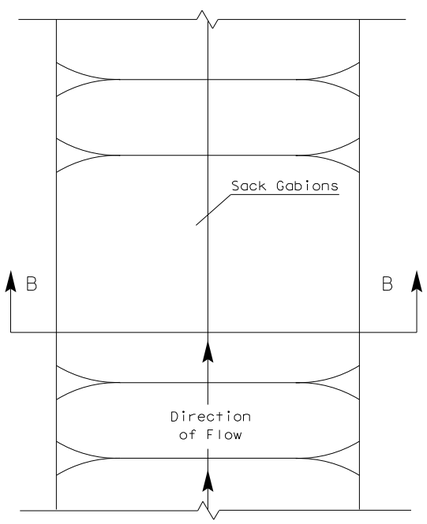

PLAN VIEW

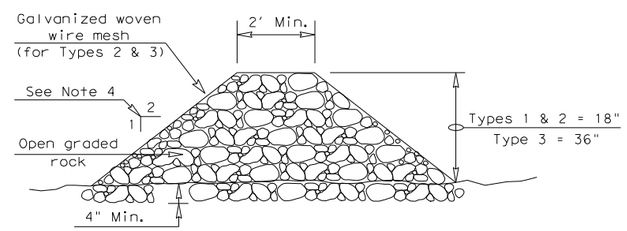

SECTION C-C

¾" Dia.
Rebar Stakes

SECTION B-B

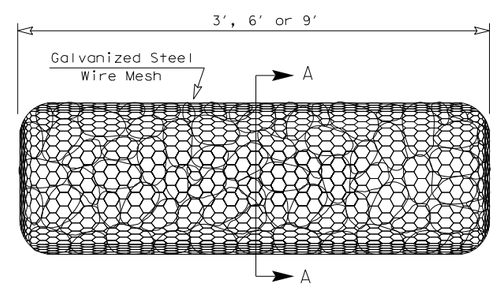

TYPE 4 (SACK GABIONS)

RFD4

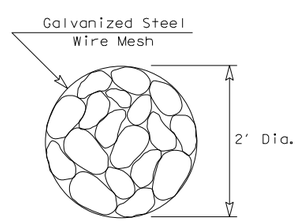

SECTION A-A

ROCK FILTER DAM USAGE GUIDELINES

Rock Filter Dams should be constructed downstream from disturbed areas to intercept sediment from overland runoff and/or concentrated flow. The dams should be sized to filter a maximum flow through rate of 60 GPM/FT^2 of cross sectional area. A 2 year storm frequency may be used to calculate the flow rate.

Type 1 (18" high with no wire mesh) (3" to 6" aggregate): Type 1 may be used at the toe of slopes, around inlets, in small ditches, and at dike or swale outlets. This type of dam is recommended to control erosion from a drainage area of 5 acres or less. Type 1 may not be used in concentrated high velocity flows (approximently 8 Ft/Sec or more) in which aggregate wash out may occur. Sandbags may be used at the embedded foundation (4" deep min.) for better filtering efficiency of low flows if called for on the plans or directed by the Engineer.

Type 2 (18" high with wire mesh) (3" to 6" aggregate): Type 2 may be used in ditches and at dike or swale outlets.

Type 3 (36" high with wire mesh) (4" to 8" aggregate): Type 3 may be used in stream flow and should be secured to the stream bed.

Type 4 (Sack gabions) (3" to 6" aggregate): Type 4 May be used in ditches and smaller channels to form an erosion control dam.

Type 5: Provide rock filter dams as shown on plans.

GENERAL NOTES

1. If shown on the plans or directed by the Engineer, filter dams should be placed near the toe of slopes where erosion is anticipated, upstream and/or downstream at drainage structures, and in roadway ditches and channels to collect sediment.
2. Materials (aggregate, wire mesh, sandbags, etc.) shall be as indicated by the specification for "Rock Filter Dams for Erosion and Sedimentation Control".
3. The rock filter dam dimensions shall be as indicated on the SW3P plans.
4. Side slopes should be 2:1 or flatter. Dams within the safety zone shall have sideslopes of 6:1 or flatter.
5. Maintain a minimum of 1' between top of rock filter dam weir and top of embankment for filter dams at sediment traps.
6. Filter dams should be embedded a minimum of 4" into existing ground.
7. The sediment trap for ponding of sediment laden runoff shall be of the dimensions shown on the plans.
8. Rock filter dam types 2 & 3 shall be secured with 20 gauge galvanized woven wire mesh with 1" diameter hexagonal openings. The aggregate shall be placed on the mesh to the height & slopes specified. The mesh shall be folded at the upstream side over the aggregate and tightly secured to itself on the downstream side using wire ties or hog rings. For in stream use, the mesh should be secured or staked to the stream bed prior to aggregate placement.
9. Sack Gabions should be staked down with ¾" dia. rebar stakes, and have a double-twisted hexagonal weave with a nominal mesh opening of 2 ½" x 3 ¼"
10. Flow outlet should be onto a stabilized area (vegetation, rock, etc.).
11. The guidelines shown hereon are suggestions only and may be modified by the Engineer.

PLAN SHEET LEGEND

Type 1 Rock Filter Dam	RFD1
Type 2 Rock Filter Dam	RFD2
Type 3 Rock Filter Dam	RFD3
Type 4 Rock Filter Dam	RFD4

Texas Department of Transportation — Design Division Standard

TEMPORARY EROSION, SEDIMENT AND WATER POLLUTION CONTROL MEASURES

ROCK FILTER DAMS

EC(2)-16

FILE: ec216	DN: TxDOT	CK: KM	DW: VP	DN/CK: LS
©TxDOT JULY 2016	CONT	SECT	JOB	HIGHWAY
REVISIONS	0922	33	076	CS
	DIST		COUNTY	SHEET NO.
	LRD		WEBB	61

DISCLAIMER:
The use of this standard is governed by the "Texas Engineering Practice Act". No warranty of any kind is made by TxDOT for any purpose whatsoever. TxDOT assumes no responsibility for the conversion of this standard to other formats or for incorrect results or damages resulting from its use.

PLOTTED ON: 7/12/2024 @ 7:41:34 PM DESIGN FILENAME: X:\data\txdot\projects\359700_LasCruces_FlechaWestLaredoCorridor\IS\Standards\SW3Plec316.dgn

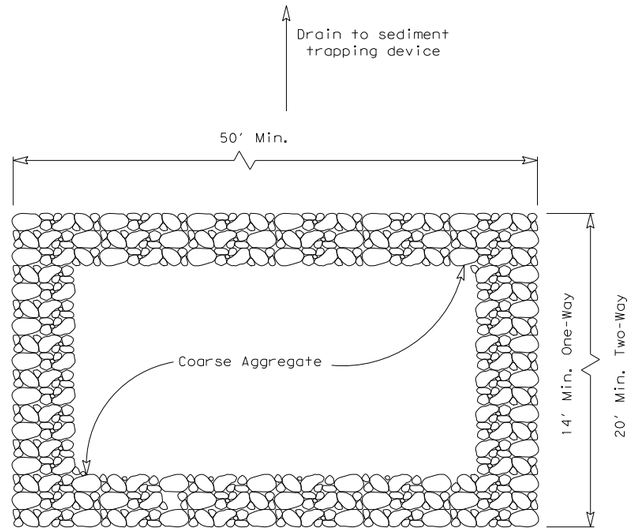

PLAN VIEW

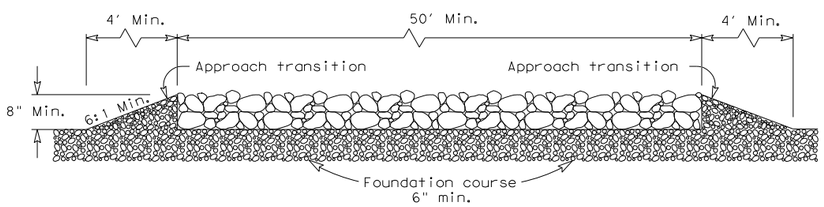

ELEVATION VIEW

CONSTRUCTION EXIT (TYPE 1)

ROCK CONSTRUCTION (LONG TERM)

GENERAL NOTES (TYPE 1)

1. The length of the type 1 construction exit shall be as indicated on the plans, but not less than 50′.
2. The coarse aggregate should be open graded with a size of 4" to 8".
3. The approach transitions should be no steeper than 6:1 and constructed as directed by the Engineer.
4. The construction exit foundation course shall be flexible base, bituminous concrete, portland cement concrete or other materialas approved by the Engineer.
5. The construction exit shall be graded to allow drainage to a sediment trapping device.
6. The guidelines shown hereon are suggestions only and may be modified by the Engineer.
7. Construct exits with a width of at least 14 ft. for one-way and 20 ft. for two-way traffic for the full width of the exit, or as directed by the engineer.

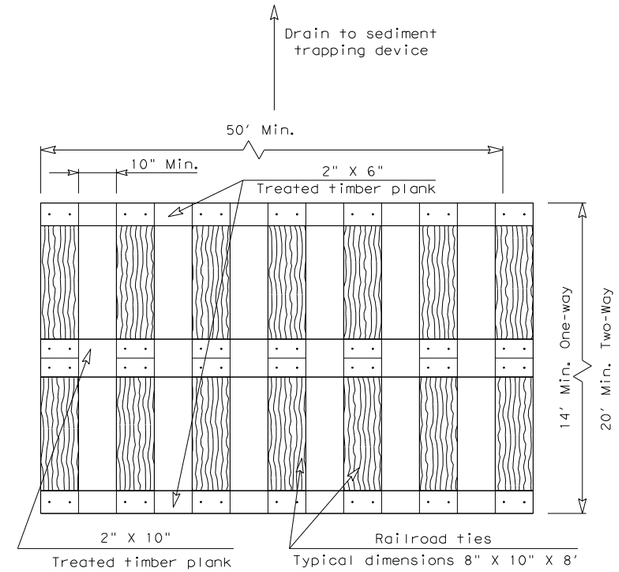

PLAN VIEW

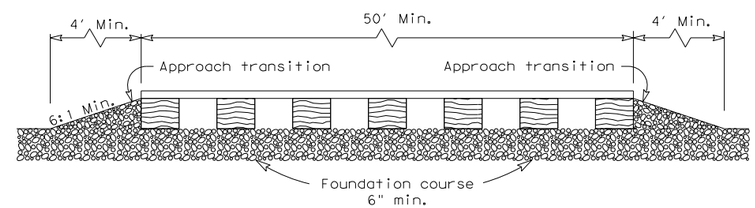

ELEVATION VIEW

CONSTRUCTION EXIT (TYPE 2)

TIMBER CONSTRUCTION (LONG TERM)

GENERAL NOTES (TYPE 2)

1. The length of the type 2 construction exit shall be as indicated on the plans, but not less than 50′.
2. The treated timber planks shall be attached to the railroad ties with ½"x 6" min. lag bolts. Other fasteners may be used as approved by the Engineer.
3. The treated timber planks shall be #2 grade min., and should be free from large and loose knots.
4. The approach transitions shall be no steeper than 6:1 and constructed as directed by the Engineer.
5. The construction exit foundation course shall be flexible base, bituminous concrete, portland cement concrete or other material as approved by the Engineer.
6. The construction exit should be graded to allow drainage to a sediment trapping device.
7. The guidelines shown hereon are suggestions only and may be modified by the Engineer.
8. Construct exits with a width of at least 14 ft. for one-way and 20 ft. for two-way traffic for the full width of the exit, or as directed by the engineer.

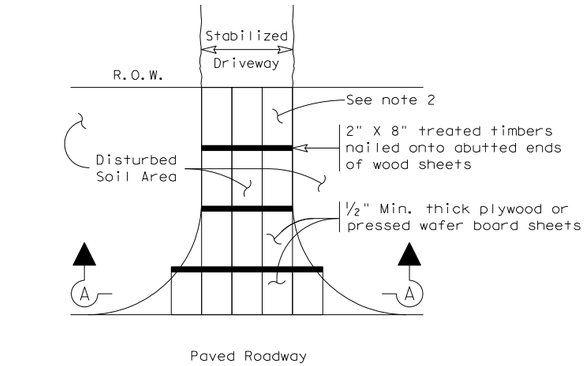

PLAN VIEW

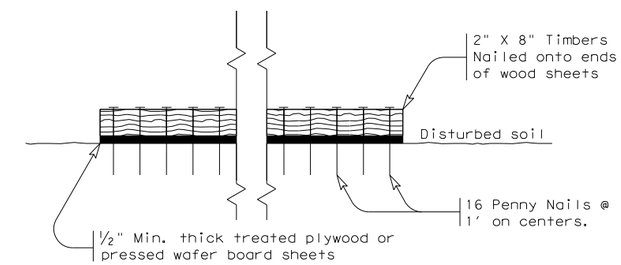

SECTION A-A

CONSTRUCTION EXIT (TYPE 3)

SHORT TERM

GENERAL NOTES (TYPE 3)

1. The length of the type 3 construction exit shall be as shown on the plans, or as directed by the Engineer.
2. The type 3 construction exit may be constructed from open graded crushed stone with a size of two to four inches spread a min. of 4" thick to the limits shown on the plans.
3. The treated timber planks shall be #2 grade min., and should be free from large and loose knots.
4. The guidelines shown hereon are suggestions only and may be modified by the Engineer.

Texas Department of Transportation

Design Division Standard

TEMPORARY EROSION, SEDIMENT AND WATER POLLUTION CONTROL MEASURES

CONSTRUCTION EXITS

EC(3)-16

FILE: ec316	DN: TxDOT	CK: KM	DW: VP	DN/CK: LS
©TxDOT JULY 2016	CONT	SECT	JOB	HIGHWAY
REVISIONS	0922	33	076	CS
	DIST	COUNTY		SHEET NO.
	LRD	WEBB		62

DISCLAIMER:
The use of this standard is governed by the "Texas Engineering Practice Act". No warranty of any kind is made by TxDOT for any purpose whatsoever. TxDOT assumes no responsibility for the conversion of this standard to other formats or for incorrect results or damages resulting from its use.

WORK ZONE SHORT TERM PAVEMENT MARKINGS DETAILS

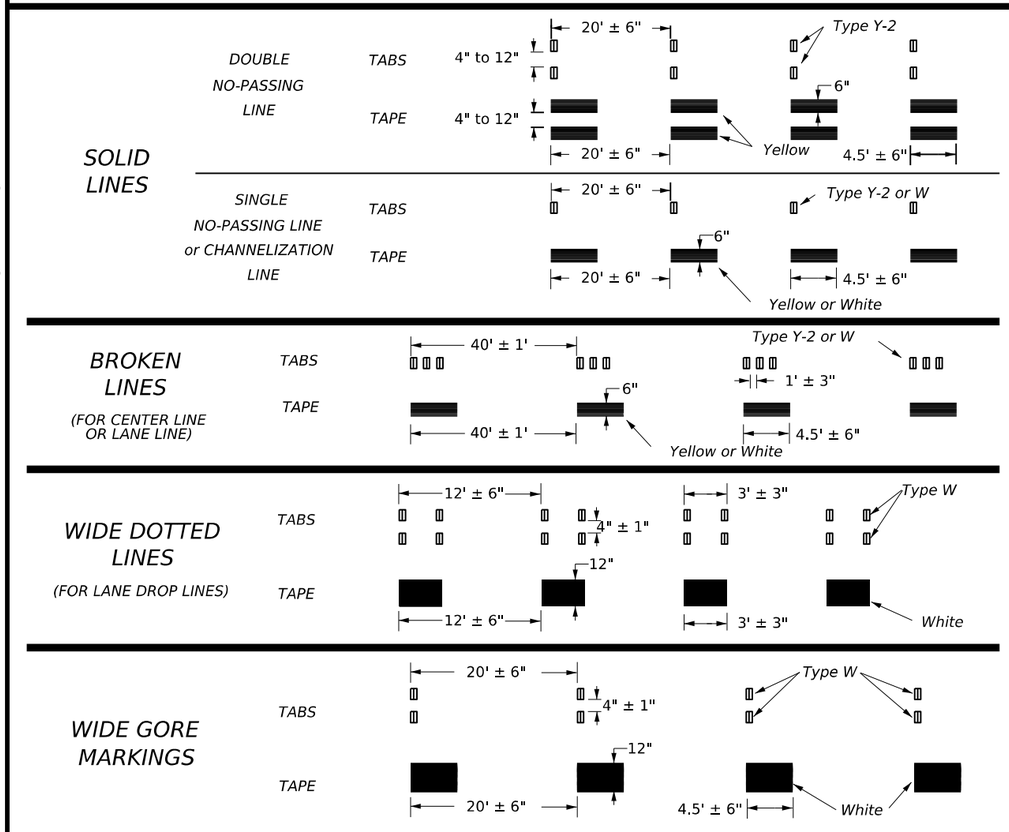

WORK ZONE SHORT TERM PAVEMENT MARKINGS PATTERNS

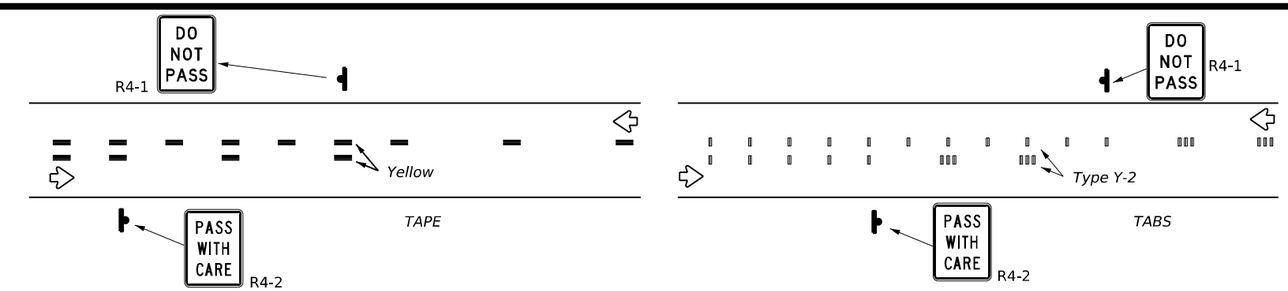

CENTER LINE & NO-PASSING ZONE BARRIER LINES FOR TWO LANE TWO-WAY HIGHWAYS

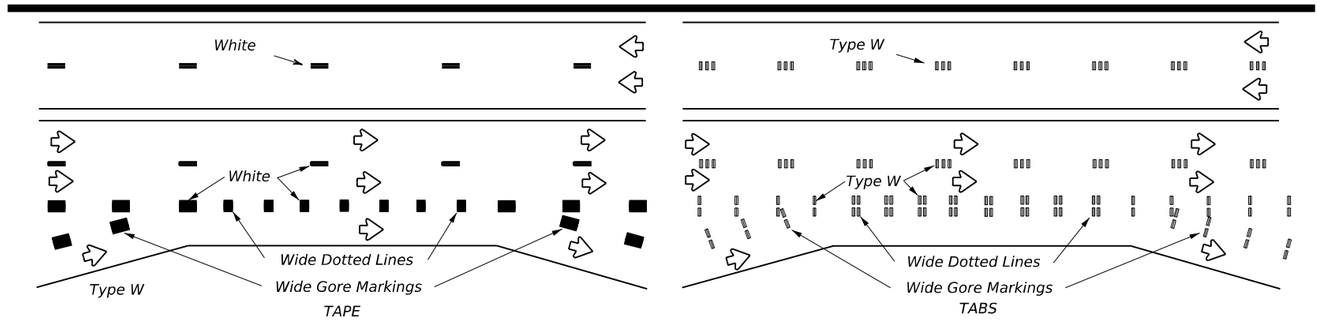

LANE LINES FOR DIVIDED HIGHWAY

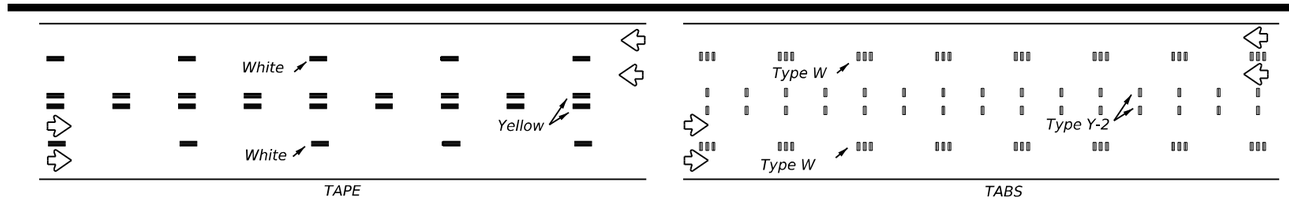

LANE & CENTER LINES FOR MULTILANE UNDIVIDED HIGHWAYS

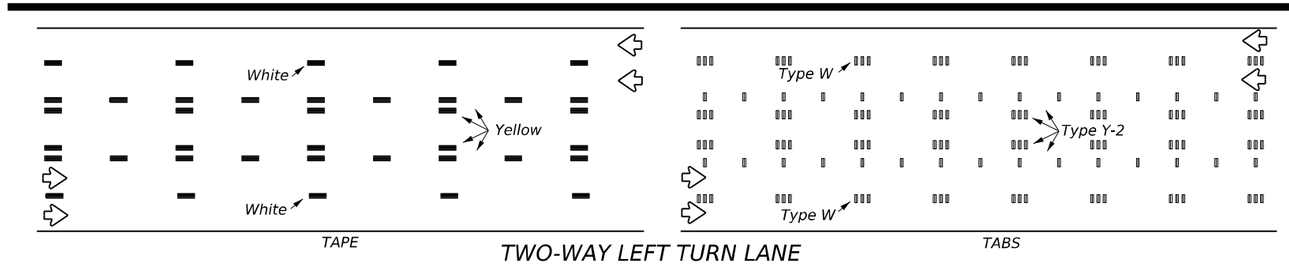

TWO-WAY LEFT TURN LANE

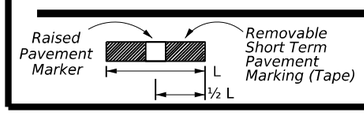

If raised pavement markers are used to supplement REMOVABLE short term markings, the markers shall be applied to the top of the tape at the approximate mid length of the tape. This allows an easier removal of raised markers and tape.

NOTES:

1. Short term pavement markings may be prefabricated markings (stick down tape) or temporary flexible reflective roadway marker tabs unless otherwise specified elsewhere in plans.
2. Short term pavement markings shall NOT be used to simulate edge lines.
3. Dimensions indicated on this sheet are typical and approximate. Variations in size and height may occur between markers or devices made by manufacturers, by as much as 1/4 inch, unless otherwise noted.
4. Temporary flexible-reflective roadway marker tabs will require normal maintenance replacement when used on roadways with an ADT per lane of up to 7500 vehicles with no more than 10% truck mix. When roadways exceed these values, additional maintenance replacement of devices should be planned.
5. No segment of roadway open to traffic shall remain without permanent pavement markings for a period greater than 14 calendar days. The Contractor will be responsible for maintaining short term pavement markings until permanent pavement markings are in place. When the Contractor is responsible for placement of permanent pavement markings, no segment of roadway shall remain without permanent pavement markings for a period greater than 14 calendar days unless weather conditions prohibit placement. Permanent pavement markings shall be placed as soon as weather permits.
6. For two lane, two-way roadways, DO NOT PASS signs shall be erected to mark the beginning of sections where passing is prohibited and PASS WITH CARE signs shall be erected to mark the beginning of sections where passing is permitted. Signs shall be in accordance with the "Texas Manual on Uniform Traffic Control Devices" (TMUTCD) and may be used to indicate the limits of no-passing zones for up to 14 calendar days. Permanent pavement markings should then be placed.
7. For low volume two lane, two-way roadways of 4000 ADT or less, no-passing lines may be omitted when approved by the Engineer. DO NOT PASS and PASS WITH CARE signs shall be erected (see note 6).
8. For exit gores where a lane is being dropped place wide gore markings or retroreflective channelizing devices to guide motorist through the exit. If channelizing devices are to be used it should be noted elsewhere in the plans. One piece cones are not allowed for this purpose.

TEMPORARY FLEXIBLE, REFLECTIVE ROADWAY MARKER TABS (TABS)

1. Temporary flexible-reflective roadway marker tabs detailed on this sheet will be designated Type Y-2 (two amber reflective surfaces with yellow body); Type Y (one amber reflective surface with yellow body); and Type W (one white or silver reflective surface with white body). Additional details may be found on BC(11).
2. Tabs shall meet requirements of Departmental Material Specification DMS-8242.
3. When dry, tabs shall be visible for a minimum distance of 200 feet during normal daylight hours and when illuminated by automobile low-beam head light at night, unless sight distance is restricted by roadway geometrics.
4. No two consecutive tabs nor four tabs per 1000 feet of line shall be missing or fail to meet the visual performance requirements of Note 3.

PREFABRICATED PAVEMENT MARKINGS

1. Temporary Removable Prefabricated Pavement Markings shall meet the requirements of DMS-8241.
2. Non-removable Prefabricated Pavement Markings shall meet the requirements of either DMS-8240 "Permanent Prefabricated Pavement Markings" or DMS-8243 "Temporary Costruction-Grade Prefabricated Pavement Markings."

RAISED PAVEMENT MARKERS

1. All raised pavement markers used for work zone markings shall meet the requirements of Item 672, "RAISED PAVEMENT MARKERS" and DMS-4200.

DEPARTMENTAL MATERIAL SPECIFICATIONS (DMS) & MATERIAL PRODUCER LISTS (MPL)

1. DMSs referenced above can be found along with embedded links to their respective MPLs at the following website:

http://www.txdot.gov/business/contractors_consultants/material_specifications/default.htm

Texas Department of Transportation

Traffic Safety Division Standard

WORK ZONE SHORT TERM PAVEMENT MARKINGS

WZ(STPM)-23

FILE: wzstpm-23.dgn	DN:	CK:	DW:	CK:
©TxDOT February 2023	CONT	SECT	JOB	HIGHWAY
REVISIONS	0922	33	076	CS
4-92 7-13	DIST		COUNTY	SHEET NO.
1-97 2-23	LRD		WEBB	63
3-03				

DATE:
FILE:

DRILL SEEDING WITH STRAW/HAY MULCH

PREFERRED RURAL/SMALL URBAN SEEDING METHOD

RECOMMENDED USES:

- PERMANENT SEEDING (BARE SOIL) (YEAR-ROUND)

REQUIRED BID ITEMS:

164 2033 DRILL SEEDING (PERM) (RURAL) (SANDY)
OR
164 2035 DRILL SEEDING (PERM) (RURAL) (CLAY)
OR
164 2037 DRILL SEEDING (PERM) (URBAN) (SANDY)
OR
164 2039 DRILL SEEDING (PERM) (URBAN) (CLAY)
AND
164 2045 STRAW OR HAY MULCHING
AND
314 2022 EMULS ASPH (EROSN CONT)(MS - 2 OR SS - 1)

CONSTRUCTION SEQUENCE:

- Refer to Items 162 & 164 of the Texas Standard Specifications for Construction of Highways, Streets, and Bridges 2004 for specifications, dimensions, volumes and measurements that have been modified or not shown.

1. Distribute topsoil

Refer to Item 160 for instructions and requirements. Uniformly distribute topsoil at a thickness of 6 inches unless otherwise specified in the plans.

2. Prepare seed bed

Refer to section 164.3 for instructions.

3. Apply seed mixture

Refer to Item 164 for instructions. Refer to "Seed Mix" shown on sheet 2 of 2 for a list of species and rates.

4. Apply fertilizer

Refer to Item 166 for instructions.

5. Apply straw/hay mulch & emulsion

Refer to section 164.3.E for instructions.
Anchor mulch with emulsion (SS-1, CSS-1, MS-2, CMS-2); undiluted, at the following rates:
Hay - 0.15 gallons/sy
Straw - 0.30 gallons/sy

*Vegetative watering is not required unless otherwise specified in the general notes under Item 168.

STRAW/HAY MULCH SEEDING

PREFERRED RURAL/SMALL URBAN SEEDING METHOD

RECOMMENDED USES:

- PERMANENT SEEDING (BARE SOIL)(YEAR-ROUND)
- TEMPORARY SEEDING (BARE SOIL)(YEAR-ROUND)

REQUIRED BID ITEMS:

164 2013 STRAW / HAY MLCH SEED (PERM) (RURAL) (SANDY)
OR
164 2015 STRAW / HAY MLCH SEED (PERM) (RURAL) (CLAY)
OR
164 2017 STRAW / HAY MLCH SEED (PERM) (URBAN) (SANDY)
OR
164 2019 STRAW / HAY MLCH SEED (PERM) (URBAN) (CLAY)
OR
164 2047 STRAW / HAY MLCH SEED (TEMP) (WARM)
OR
164 2049 STRAW / HAY MLCH SEED (TEMP) (COOL)
OR
314 2022 EMULS ASPH (EROSN CONT) (MS - 2 OR SS - 1)

CONSTRUCTION SEQUENCE:

- Refer to Items 162 & 164 of the Texas Standard Specifications for Construction of Highways, Streets, and Bridges 2004 for specifications, dimensions, volumes and measurements that have been modified or not shown.

1. Distribute topsoil

Refer to Item 160 for instructions and requirements. Uniformly distribute topsoil at a thickness of 6 inches unless otherwise specified in the plans.

2. Prepare seed bed

Refer to section 164.3 for instructions.

3. Apply seed mixture

Refer to Item 164 for instructions. Refer to "Seed Mix" shown on sheet 2 of 2 for a list of species and rates.

4. Apply fertilizer

Refer to Item 166 for instructions.

5. Apply straw/hay mulch & emulsion

Refer to section 164.3.E for instructions.
Anchor mulch with emulsion (SS-1, CSS-1, MS-2, CMS-2); undiluted, at the following rates:
Hay - 0.15 gallons/sy
Straw - 0.30 gallons/sy

*Vegetative watering is not required unless otherwise specified in the general notes under Item 168.

CELLULOSE FIBER MULCH SEEDING

PREFERRED LARGE URBAN SEEDING METHOD

RECOMMENDED USES:

- TEMPORARY SEEDING (BARE SOIL)(COOL ONLY)
- OVERSEEDING PERMANENT GRASSES INTO TEMP GRASSES (YEAR-ROUND)

REQUIRED BID ITEMS:

164 2031 CELL FBR MLCH SEED (TEMP) (COOL)
OR
164 2021 CELL FBR MLCH SEED (PERM) (RURAL) (SANDY)
OR
164 2023 CELL FBR MLCH SEED (PERM) (RURAL) (CLAY)
OR
164 2025 CELL FBR MLCH SEED (PERM) (URBAN) (SANDY)
OR
164 2027 CELL FBR MLCH SEED (PERM) (URBAN) (CLAY)

CONSTRUCTION SEQUENCE:

- Refer to Items 162 & 164 of the Texas Standard Specifications for Construction of Highways, Streets, and Bridges 2004 for specifications, dimensions, volumes and measurements that have been modified or not shown.

1. Distribute topsoil

Refer to Item 160 for instructions and requirements. Uniformly distribute topsoil at a thickness of 6 inches unless otherwise specified in the plans.

2. Prepare seed bed

Refer to section 164.3 for instructions.
Prior to seeding:
- If seeding into bare ground - till soil to a 4 inch depth.
- If seeding into temporary vegetation cover - mow at a height range of 4-7 inches.

3. Apply seed, fertilizer, and mulch mixture

Refer to Items 164 and 166 for instructions.
Refer to "Seed Mix" shown on sheet 2 of 2 for a list of species and rates.

Use the 2-step method in which the seed and less than 10% of the required mulch is applied in the first application. The remainder of the mulch and is then applied in the subsequent applications.

4. Begin Vegetative Watering

Initiate vegetative watering as follows:
Cool temporary vegetation - within 5 days of placing the seed.
Permanent vegetation - delay watering until after next rainfall of 1/2" or greater.

BROADCAST SEEDING

RECOMMENDED USES:

- TEMPORARY SEEDING (BARE SOIL)(COOL ONLY)
- OVERSEEDING PERMANENT GRASSES INTO TEMP GRASSES (YEAR-ROUND)

REQUIRED BID ITEMS:

164 2011 BROADCAST SEED (TEMP) (COOL)
OR
164 2001 BROADCAST SEED (PERM) (RURAL) (SANDY)
OR
164 2003 BROADCAST SEED (PERM) (RURAL) (CLAY)
OR
164 2005 BROADCAST SEED (PERM) (URBAN) (SANDY)
OR
164 2007 BROADCAST SEED (PERM) (URBAN) (CLAY)

CONSTRUCTION SEQUENCE:

- Refer to Items 162 & 164 of the Texas Standard Specifications for Construction of Highways, Streets, and Bridges 2004 for specifications, dimensions, volumes and measurements that have been modified or not shown.

1. Distribute topsoil

Refer to Item 160 for instructions and requirements. Uniformly distribute topsoil at a thickness of 6 inches unless otherwise specified in the plans.

2. Prepare seed bed

Refer to section 164.3 for instructions.
Prior to seeding:
If seeding into bare ground - till soil to a 4 inch depth.
If seeding into temporary vegetation cover - mow at a height range of 4-7 inches.

3. Apply seed mixture

Refer to Items 164 and 166 for instructions.
Refer to "Seed Mix" shown on sheet 2 of 2 for a list of species and rates.

4. Apply fertilizer

Refer to Item 166 for instructions.

5. Begin Vegetative Watering

Initiate vegetative watering as follows:
Cool temporary vegetation - within 5 days of placing the seed.
Permanent vegetation - delay watering until after next rainfall of 1/2" or greater.

DRILL SEEDING

PREFERRED RURAL/URBAN OVER-SEEDING METHOD

RECOMMENDED USES:

- OVERSEEDING PERMANENT GRASSES INTO TEMP GRASSES (YEAR-ROUND)

REQUIRED BID ITEMS:

164 2033 DRILL SEEDING (PERM) (RURAL) (SANDY)
OR
164 2035 DRILL SEEDING (PERM) (RURAL) (CLAY)
OR
164 2037 DRILL SEEDING (PERM) (URBAN) (SANDY)
OR
164 2039 DRILL SEEDING (PERM) (URBAN) (CLAY)

CONSTRUCTION SEQUENCE:

- Refer to Items 162 & 164 of the Texas Standard Specifications for Construction of Highways, Streets, and Bridges 2004 for specifications, dimensions, volumes and measurements that have been modified or not shown.

1. Distribute topsoil

Refer to Item 160 for instructions and requirements. Uniformly distribute topsoil at a thickness of 6 inches unless otherwise specified in the plans.

2. Prepare seed bed

Refer to section 164.3 for instructions.
Prior to seeding:
If seeding into bare ground - till soil to a 4 inch depth.
If seeding into temporary vegetation cover - mow at a height range of 4-7 inches.

3. Apply seed mixture

Refer to Items 164 and 166 for instructions.
Refer to "Seed Mix" shown on sheet 2 of 2 for a list of species and rates.

4. Apply fertilizer

Refer to Item 166 for instructions.

5. Begin Vegetative Watering

Initiate vegetative watering as follows:
Cool temporary vegetation - within 5 days of placing the seed.
Permanent vegetation - delay watering until after next rainfall of 1/2" or greater.

TEXAS DEPARTMENT OF TRANSPORTATION
LAREDO DISTRICT

SHEET 1 OF 2

REVEGETATION NOTES AND SPECIFICATIONS

©TxDOT JANUARY 2002

DN: -	CK: -	DW: -	CK: -

REVISIONS	STATE DISTRICT	FEDERAL REGION	FEDERAL AID PROJECT	SHEET
	LRD	6	DMO 2012 (628)	64

COUNTY	CONTROL	SECTION	JOB	HIGHWAY
WEBB	0922	33	076	CS

PLOTTED ON: 6/27/2024 @ 3:55:50 PM DESIGN FILENAME: X:\data\txdot\Projects\359700_LasCruces_Flecha\WestLaredoCorridorII\Standards\SW3P\Revegetation_Notes_Laredo.dgn

LEVELS DISPLAYED
1 2 3 4 5 6 7 8 9 10 11 12 13 14 15 16
17 18 19 20 21 22 23 24 25 26 27 28 29 30 31 32
33 34 35 36 37 38 39 40 41 42 43 44 45 46 47 48
49 50 51 52 53 54 55 56 57 58 59 60 61 62

DATE:
ACC:
FILE:

DN:
CK:
DW:
CK:

PERMANENT SOIL STABILIZATION

*SEED QUANTITIES ARE POUNDS PURE LIVE SEED PER ACRE.

PERMANENT SEED MIX

January 15 thru May 01

RURAL

■ Clay Soils	*
Green Sprangletop	0.3
Sideoats Grams (Haskell)	3.6
Plains Bristlegrass	1.2
Buffalograss (Texoka)	3.2
Bermudagrass	1.2
Illinois Bundleflower	1.0

■ Sandy Soils	*
Green Sprangletop	0.3
Bermudagrass	1.2
Sand Dropseed	0.2
Lehmans Lovegrass	0.3
Purple Prairieclover	0.5

URBAN

■ Clay Soils	*
Green Sprangletop	0.3
Sideoats Grams (Haskell)	4.5
Buffalograss (Texoka)	1.6
Bermudagrass	1.8

■ Sandy Soils	*
Green Sprangletop	0.3
Bermudagrass	1.0
Buffalograss	3.2
Sand Dropseed	0.3

May 01 thru September 01

RURAL

■ Clay Soils	*
Green Sprangletop	0.3
Sideoats Grams (Haskell)	3.6
Plains Bristlegrass	1.2
Buffalograss (Texoka)	1.6
Bermudagrass	1.2
Illinois Bundleflower	1.0
Foxtail Millet	3.0
Browntop Millet	6.0

■ Sandy Soils	*
Green Sprangletop	0.3
Bermudagrass	0.6
Sand Dropseed	0.2
Lehmans Lovegrass	0.2
Purple Prairieclover	0.5
Foxtail Millet	3.0
Browntop Millet	6.0

URBAN

■ Clay Soils	*
Green Sprangletop	0.3
Sideoats Grams (Haskell)	4.5
Buffalograss (Texoka)	1.6
Bermudagrass	1.2
Foxtail Millet	3.0
Browntop Millet	6.0

■ Sandy Soils	*
Green Sprangletop	0.3
Bermudagrass	0.8
Buffalograss	3.2
Sand Dropseed	0.3
Foxtail Millet	3.0
Browntop Millet	6.0

September 01 thru January 15

RURAL

■ Clay Soils	*
Green Sprangletop	0.3
Sideoats Grams (Haskell)	3.6
Plains Bristlegrass	1.2
Buffalograss (Texoka)	1.6
Bermudagrass	1.2
Illinois Bundleflower	1.0
Oats	40.0

■ Sandy Soils	*
Green Sprangletop	0.3
Bermudagrass	0.6
Sand Dropseed	0.2
Lehmans Lovegrass	0.2
Purple Prairieclover	0.5
Oats	40.0

URBAN

■ Clay Soils	*
Green Sprangletop	0.3
Sideoats Grams (Haskell)	4.5
Buffalograss (Texoka)	1.6
Bermudagrass	1.8
Oats	40.0

■ Sandy Soils	*
Green Sprangletop	0.3
Bermudagrass	0.8
Buffalograss	3.2
Sand Dropseed	0.3
Oats	40.0

TEMPORARY SOIL STABILIZATION

*SEED QUANTITIES ARE POUNDS PURE LIVE SEED PER ACRE.

TEMPORARY SEED MIX

February15 thru September 31

WARM SEASON

Foxtail Millet	6.0
Browntop Millet	15.0

October 01 thru February 15

COOL SEASON

Oats	72.0

VEGETATIVE WATERING FOR SEED AND SOD

ITEM 168---VEGETATIVE WATERING

RURAL---NO VEGETATIVE WATERING

URBAN---TEMPORARY IRRIGATION---REFER TO IRRIGATION PLAN SHEETS FOR ZONE TIMES.

URBAN---TRUCK IRRIGATION---REFER TO WATERING SCHEDULE BELOW:

WATERING SCHEDULE

	FIRST 14 DAYS	14-28 DAYS	28-42 DAYS	TOTAL CYCLES
Seeded Sites	Twice per day	Twice per day	Once per day	70
Sodded Sites	Twice per day	Once per day	————	42

Refer to General Notes for standard watering rate. However, rate and frequency may be adjusted, with the approval of the engineer, to meet site conditions.

SEEDING NOTES:

1. All seed shall meet labelling, delivery, analysis, and testing requirements as described in Item 164.2.A.
2. All drill seeding shall be accomplished using a pasture or rangeland type drill seeder. Grain drills or Brillion seeders are not acceptable. Seedbed prep is required, even for no-till drill seeders, when seeding into bare soil.
3. All seed shall be drilled to a depth of 1/4 inch to 1/2 inch.
4. Seeding with compost:
   - Prior to seeding, one inch of compost shall be applied to the soil followed by an application of fertilizer. Refer to Item 166 Fertilizer for specifications and application rate.
   - Compost/fertilizer shall be tilled into the soil to a depth of four inches. Seed into prepared seedbed.
5. Where drill seeding is specified, and site conditions prevent it, broadcast seeding is permitted as approved by the engineer.
6. CELL FIBER MULCH SEEDING shall only be used where site conditions prevent drill seeding (refer to plan sheets for type of seeding). Seeding shall be a two-step process as detailed above.
7. Vegetative watering shall be paid for under Item 168. Watering rate and specifications shall be as shown on sheet 2 of 2 under Item 168.

DN:
CK:
DW:
CK:

LEVELS DISPLAYED

1	2	3	4	5	6	7	8	9	10	11	12	13	14	15	16
17	18	19	20	21	22	23	24	25	26	27	28	29	30	31	32
33	34	35	36	37	38	39	40	41	42	43	44	45	46	47	48
49	50	51	52	53	54	55	56	57	58	59	60	61	62		

DATE:
ACC:
FILE:

TEXAS DEPARTMENT OF TRANSPORTATION
LAREDO DISTRICT

SHEET 2 OF 2

REVEGETATION
NOTES AND SPECIFICATIONS

©TxDOT JANUARY 2002 DN: - CK: - DW: - CK: -

REVISIONS	STATE DISTRICT	FEDERAL REGION	FEDERAL AID PROJECT			SHEET
	LRD	6	DMO 2012 (628)			65
	COUNTY		CONTROL	SECTION	JOB	HIGHWAY
	WEBB		0922	33	076	CS

LAS CRUCES DR. HORIZONTAL ALIGNMENT

Beginning chain RPC02 description
==========

Point LC200 N 17,101,624.0618 E 656,904.4060 Sta 6+00.00

Course from LC200 to LC201 N 66° 10' 38.45" E Dist 400.0000

Point LC201 N 17,101,785.6246 E 657,270.3261 Sta 10+00.00

Course from LC201 to LC202 N 74° 51' 11.48" E Dist 153.4073

Point LC202 N 17,101,825.7089 E 657,418.4039 Sta 11+53.41

Course from LC202 to PC RPC021 N 67° 23' 03.02" E Dist 153.3957

Curve Data
———-

Curve RPC021
P.I. Station 14+29.42 N 17,101,931.8481 E 657,673.1885
Delta = 52° 15' 04.97" (LT)
Degree = 22° 55' 05.92"
Tangent = 122.6128
Length = 227.9897
Radius = 250.0000
External = 28.4491
Long Chord = 220.1709
Mid. Ord. = 25.5424
P.C. Station 13+06.80 N 17,101,884.6973 E 657,560.0041
P.T. Station 15+34.79 N 17,102,050.2090 E 657,705.1974
C.C. N 17,102,115.4733 E 657,463.8666
Back = N 67° 23' 03.02" E
Ahead = N 15° 07' 58.05" E
Chord Bear = N 41° 15' 30.54" E

Course from PT RPC021 to PC RPC022 N 15° 07' 58.05" E Dist 219.0220

Curve Data
———-

Curve RPC022
P.I. Station 18+76.67 N 17,102,380.2300 E 657,794.4465
Delta = 52° 20' 25.79" (RT)
Degree = 22° 55' 05.92"
Tangent = 122.8540
Length = 228.3785
Radius = 250.0000
External = 28.5554
Long Chord = 220.5199
Mid. Ord. = 25.6281
P.C. Station 17+53.81 N 17,102,261.6361 E 657,762.3746
P.T. Station 19+82.19 N 17,102,427.2971 E 657,907.9269
C.C. N 17,102,196.3718 E 658,003.7055
Back = N 15° 07' 58.05" E
Ahead = N 67° 28' 23.84" E
Chord Bear = N 41° 18' 10.95" E

Course from PT RPC022 to LC203 N 67° 28' 23.84" E Dist 152.7029

Point LC203 N 17,102,485.7997 E 658,048.9788 Sta 21+34.90

==========
Ending chain RPC02 description

LAS CRUCES DR. VERTICAL ALIGNMENT

Beginning profile RPCLC description:
==========

	STATION	ELEV	GRADE	TOTAL L	BACK L	AHEAD L
VPI 1	11+54.73	421.4060				
VPC	11+55.00	421.4008	-1.9253	K = 51.0		
VPI 2	12+15.00	420.2456		120.0000	60.0000	60.0000
Low Point	12+53.19	420.4555				
VPT	12+75.00	420.5022	0.4276			
VPC	13+15.00	420.6732	0.4276	K = 113.9	SSD = 885.7	
VPI 3	13+60.00	420.8656		90.0000	45.0000	45.0000
High Point	13+63.69	420.7773				
VPT	14+05.00	420.7023	-0.3628			
VPC	14+44.41	420.5593	-0.3628	K = 78.9		
Low Point	14+73.04	420.5074				
VPI 4	14+83.67	420.4169		78.5181	39.2591	39.2591
VPT	15+22.93	420.6652	0.6323			
VPC	15+55.00	420.8679	0.6323	K = 71.0	SSD = 569.3	
High Point	15+99.91	421.0099				
VPI 5	16+00.00	421.1525		90.0000	45.0000	45.0000
VPT	16+45.00	420.8667	-0.6350			
VPC	17+10.00	420.4540	-0.6350	K = 79.8		
VPI 6	17+50.00	420.2000		80.0000	40.0000	40.0000
Low Point	17+60.69	420.2931				
VPT	17+90.00	420.3469	0.3672			
VPC	18+35.00	420.5121	0.3672	K = 64.9	SSD = 481.2	
High Point	18+58.83	420.5559				
VPI 7	18+85.00	420.6957		100.0000	50.0000	50.0000
VPT	19+35.00	420.1088	-1.1738			
VPC	19+75.00	419.6393	-1.1738	K = 53.6		
VPI 8	20+20.00	419.1111		90.0000	45.0000	45.0000
Low Point	20+37.96	419.2698				
VPT	20+65.00	419.3380	0.5040			
VPI 9	20+70.72	419.3668	0.5040			

==========
Ending profile RPCLC description

STATE OF TEXAS
KYLE GASS
94833
LICENSED
PROFESSIONAL ENGINEER

KYLE GASS, P.E.
7/31/2025

LAS CRUCES REALIGNMENT

HORIZONTAL & VERTICAL ALIGNMENT DATA

SHEET 1 OF 2

KCI TECHNOLOGIES, INC.
2806 W. BITTERS RD. - SUITE 218
SAN ANTONIO, TX 78248 - 210.641.9999
TEXAS REGISTERED ENGINEERING FIRM
TBPE FIRM No. F-10573
www.kci.com

© 2024 Texas Department of Transportation

FED.RD. DIV.NO.	FEDERAL AID PROJECT NO.		SHEET NO.
6	DMO 2012 (628)		66
STATE	DIST.	COUNTY	
TEXAS	LRD	WEBB	
CONT.	SECT.	JOB	HIGHWAY NO.
0922	33	076	CS

PLOTTED ON: 2/24/2025 @ 7:18:37 PM DESIGN FILENAME: X:\data\txdot\Projects\359700_LasCruces_FlechaWestLaredoCorridor\ROADWAY\LasCruces_HALN_VALN_DATA.dgn

FM 1472 (MINES RD) HORIZONTAL ALIGNMENT

Beginning chain RXCMINES description
==========

Point M01 N 17,100,376.8503 E 657,754.1708 Sta 10+00.00

Course from M01 to M02 N 15° 08' 34.00" W Dist 4,829.0775

Point M02 N 17,105,038.2519 E 656,492.6937 Sta 58+29.08

==========
Ending chain RXCMINES description

EXISTING LAS CRUCES DR. HORIZONTAL ALIGNMENT

Beginning chain RPCEXLC description
==========

Point EX01 N 17,102,161.6099 E 657,271.1758 Sta 9+95.35

Course from EX01 to EX02 N 67° 19' 17.48" E Dist 774.4980

Point EX02 N 17,102,460.2250 E 657,985.7920 Sta 17+69.85

Course from EX02 to EX03 N 67° 28' 47.81" E Dist 223.0474

Point EX03 N 17,102,545.6537 E 658,191.8310 Sta 19+92.90

==========
Ending chain RPCEXLC description

CHANNEL HORIZONTAL ALIGNMENT

Beginning chain DXC2 description
==========

Point 2000 N 17,101,740.3620 E 657,856.1580 Sta 8+78.50

Course from 2000 to 2001 N 10° 39' 28.95" W Dist 46.6946

Point 2001 N 17,101,786.2510 E 657,847.5220 Sta 9+25.19

Course from 2001 to 2002 N 33° 27' 50.65" W Dist 66.3958

Point 2002 N 17,101,841.6405 E 657,810.9104 Sta 9+91.59

Course from 2002 to 2003 N 33° 27' 50.65" W Dist 62.6480

Point 2003 N 17,101,893.9034 E 657,776.3655 Sta 10+54.24

Course from 2003 to 2004 N 14° 52' 01.95" W Dist 159.8946

Point 2004 N 17,102,048.4452 E 657,735.3398 Sta 12+14.13

Course from 2004 to 2005 N 14° 52' 01.95" W Dist 118.2303

Point 2005 N 17,102,162.7176 E 657,705.0043 Sta 13+32.36

Course from 2005 to 2006 N 22° 32' 39.25" W Dist 107.2250

Point 2006 N 17,102,261.7489 E 657,663.8945 Sta 14+39.59

Course from 2006 to 2007 N 5° 02' 30.92" W Dist 99.3985

Point 2007 N 17,102,360.7628 E 657,655.1589 Sta 15+38.99

Course from 2007 to 2008 N 30° 53' 02.00" E Dist 11.1986

Point 2008 N 17,102,370.3735 E 657,660.9072 Sta 15+50.19

Course from 2008 to 2009 N 30° 53' 02.00" E Dist 48.0484

Point 2009 N 17,102,411.6090 E 657,685.5704 Sta 15+98.23

Course from 2009 to 2010 N 5° 02' 44.76" E Dist 32.3943

Point 2010 N 17,102,443.8778 E 657,688.4195 Sta 16+30.63

Course from 2010 to 2011 N 21° 17' 22.57" W Dist 219.1272

Point 2011 N 17,102,648.0512 E 657,608.8583 Sta 18+49.76

==========
Ending chain DXC2 description

STATE OF TEXAS
KYLE GASS
94833
LICENSED
PROFESSIONAL ENGINEER

KYLE GASS, P.E.
7/31/2025

LAS CRUCES REALIGNMENT

HORIZONTAL & VERTICAL ALIGNMENT DATA

SHEET 2 OF 2

KCI TECHNOLOGIES, INC.
2806 W. BITTERS RD. - SUITE 218
SAN ANTONIO, TX 78248 - 210.641.9999
TEXAS REGISTERED ENGINEERING FIRM
TBPE FIRM No. F-10573
www.kci.com

© 2024 Texas Department of Transportation

FED.RD. DIV.NO.	FEDERAL AID PROJECT NO.		SHEET NO.
6	DMO 2012 (628)		67
STATE	DIST.	COUNTY	
TEXAS	LRD	WEBB	
CONT.	SECT.	JOB	HIGHWAY NO.
0922	33	076	CS

PLOTTED ON: 2/24/2025 @ 7:18:37 PM DESIGN FILENAME: X:\data\txdot\Projects\359700_LasCruces_Flecha\WestLaredoCorridor\ROADWAY\LasCruces_HALN_VALN_DATA_2.dgn

PLOTTED ON: 2/26/2025 @ 7:17:45 PM DESIGN FILENAME: X:\data\xdot\Projects\359700_LasCruces_FlechaWestLaredoCorridor\ROADWAY\LasCruces_REMOVAL_01.dgn

REMOVAL LEGEND

- OBLITERATE ABANDONED ROAD
- REMOVE CONCRETE DRIVEWAY
- REMOVE CONCRETE MEDIAN
- PROPOSED MEDIAN

UTILITY LEGEND

- OP — CPS ELECTRIC O/H
- EG — ENTERPRISE GAS LINE
- CG — CPS GAS
- UT — SBC U/G TELEPHONE LINE
- OT — SBC O/H TELEPHONE LINE
- WW — SANITARY SEWER LINE
- X Water — SAWS
- EXISTING R.O.W.
- UTILITY POLE
- GUY WIRE
- ROAD SIGN
- FIRE HYDRANT
- WATER VALVE
- GAS VALVE
- GAS METER
- WATER METER
- MANHOLES
- STORM DRAIN
- CENTER POINT OF TREE
- TELEPHONE PEDESTAL
- TV CABLE CONTROL BOX

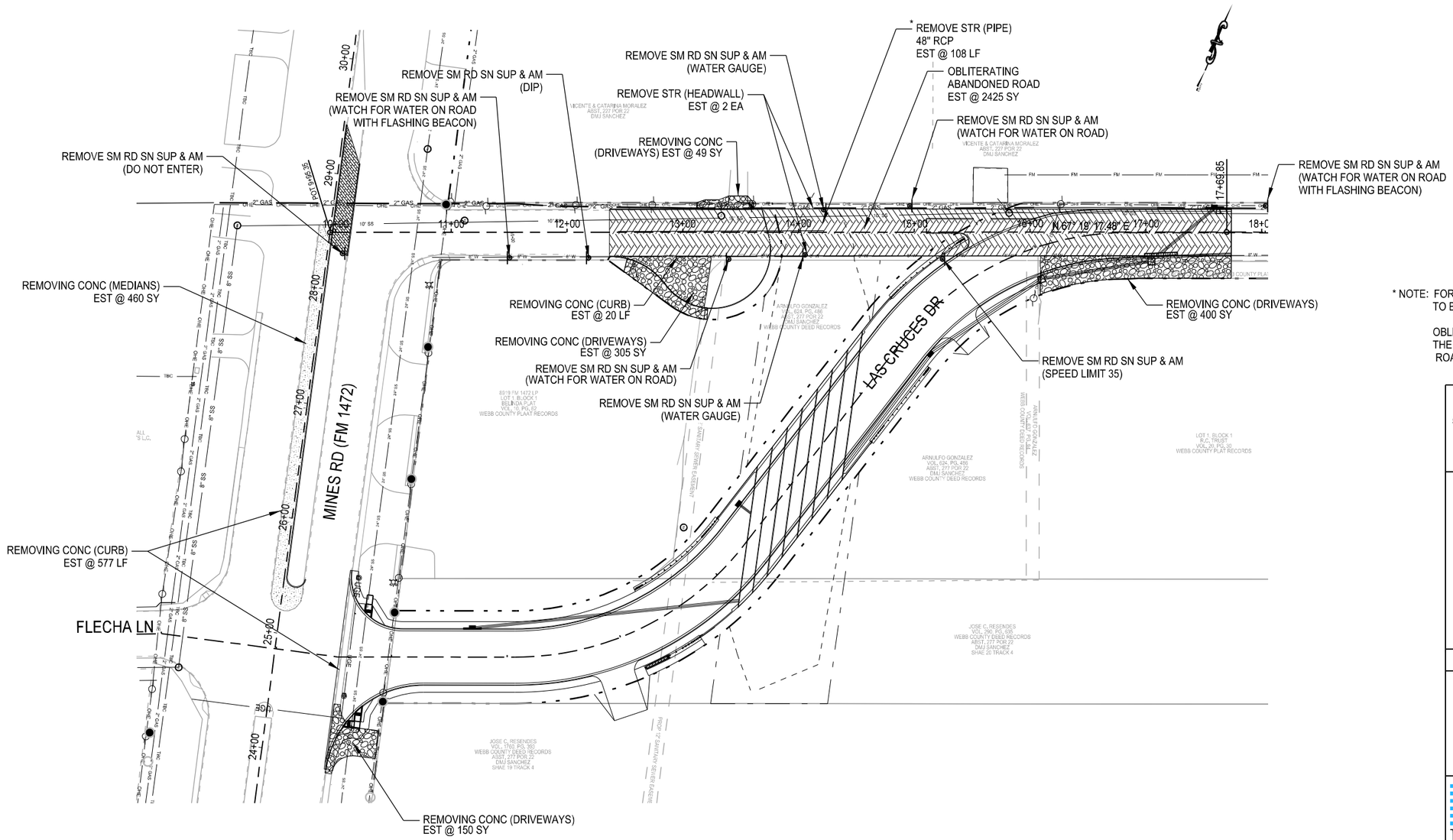

* NOTE: FOR CONTRACTOR'S INFORMATION, STRUCTURE TO BE REMOVED 2 - 36" RCP.

OBLITERAING OF ABANDONED ROAD IS TO INCLUDE THE REMOVAL OF ASPHALT PAVEMENT AT PROPOSED ROADWAY.

GRAPHIC SCALE
(IN FEET)
50 25 0 50 100 150
1" = 100'

STATE OF TEXAS
KYLE GASS
94833
LICENSED
PROFESSIONAL ENGINEER

KYLE GASS, P.E.
7/31/2025

LAS CRUCES REALIGNMENT

REMOVAL ITEMS & UTILITY LAYOUT

SHEET 1 OF 1

KCI TECHNOLOGIES, INC.
2806 W. BITTERS RD. - SUITE 218
SAN ANTONIO, TX 78248 - 210.641.9999
TEXAS REGISTERED ENGINEERING FIRM
TBPE FIRM No. F-10573
www.kci.com

© 2024 Texas Department of Transportation

FED.RD. DIV.NO.	FEDERAL AID PROJECT NO.		SHEET NO.
6	DMO 2012 (628)		68
STATE	DIST.	COUNTY	
TEXAS	LRD	WEBB	
CONT.	SECT.	JOB	HIGHWAY NO.
0922	33	076	CS

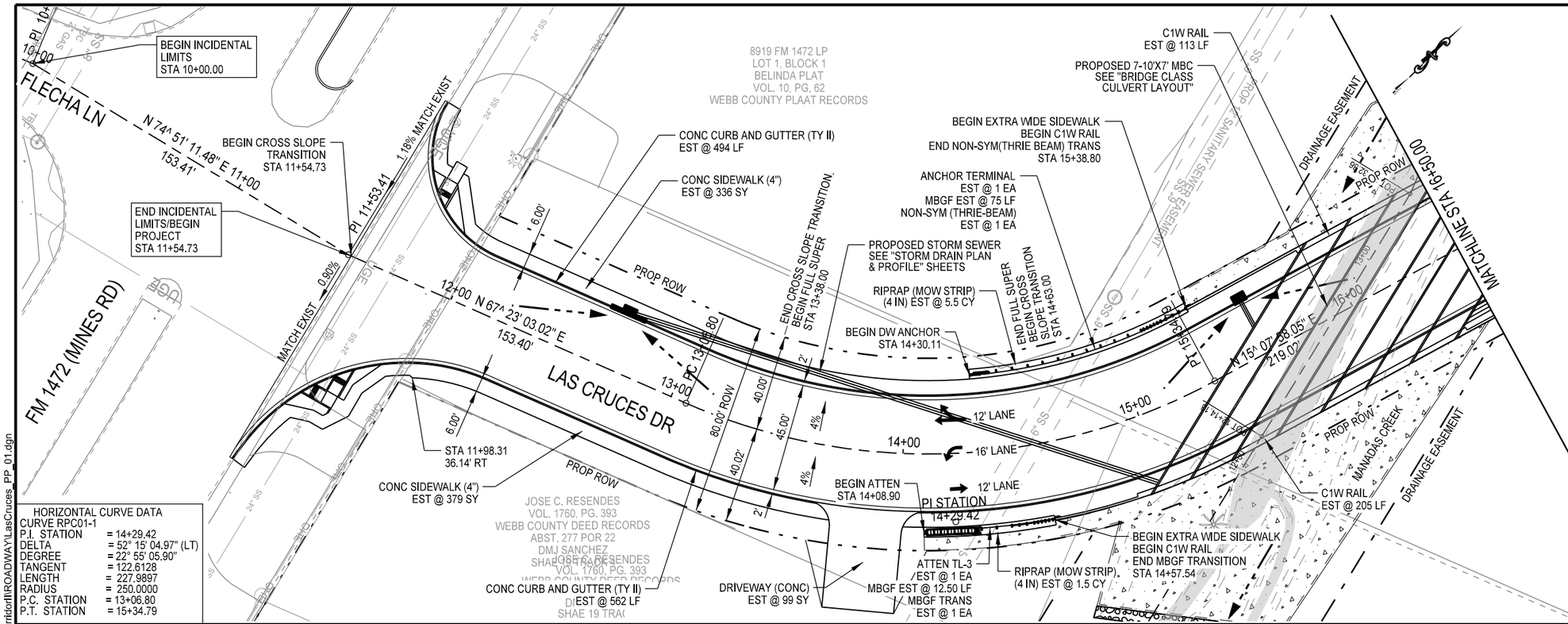

PLAN VIEW LEGEND

- PROP EDGE OF ROADWAY
- EXISTING FEATURES
- EXISTING RIGHT OF WAY
- PROPOSED RIGHT OF WAY
- DRAINAGE EASEMENT
- FLOW ARROW
- JOURISDICTIONAL WATERS WILL BE DISTURBED
- JOURISDICTIONAL WATERS TO BE PRESERVED. DO NOT DISTURB THIS AREA

NOTE:
SEE BRIDGE CLASS CULVERT LAYOUT FOR C1W RAIL BEGIN AND END STATIONS.

SEE BRIDGE CLASS CULVERT LAYOUT FOR EXTRA WIDE SIDEWALK DETAILS.

HORIZONTAL CURVE DATA

CURVE RPC01-1

P.I. STATION	= 14+29.42
DELTA	= 52° 15' 04.97" (LT)
DEGREE	= 22° 55' 05.90"
TANGENT	= 122.6128
LENGTH	= 227.9897
RADIUS	= 250.0000
P.C. STATION	= 13+06.80
P.T. STATION	= 15+34.79

LAS CRUCES DR./FM 1472 PAVEMENT SECTION

PROFILE VIEW LEGEND

- PROPOSED PGL
- EXISTING CENTERLINE

GRAPHIC SCALE (IN FEET)
25 12.5 0 25 50 75
1" = 50'
Vert: 1" = 5'

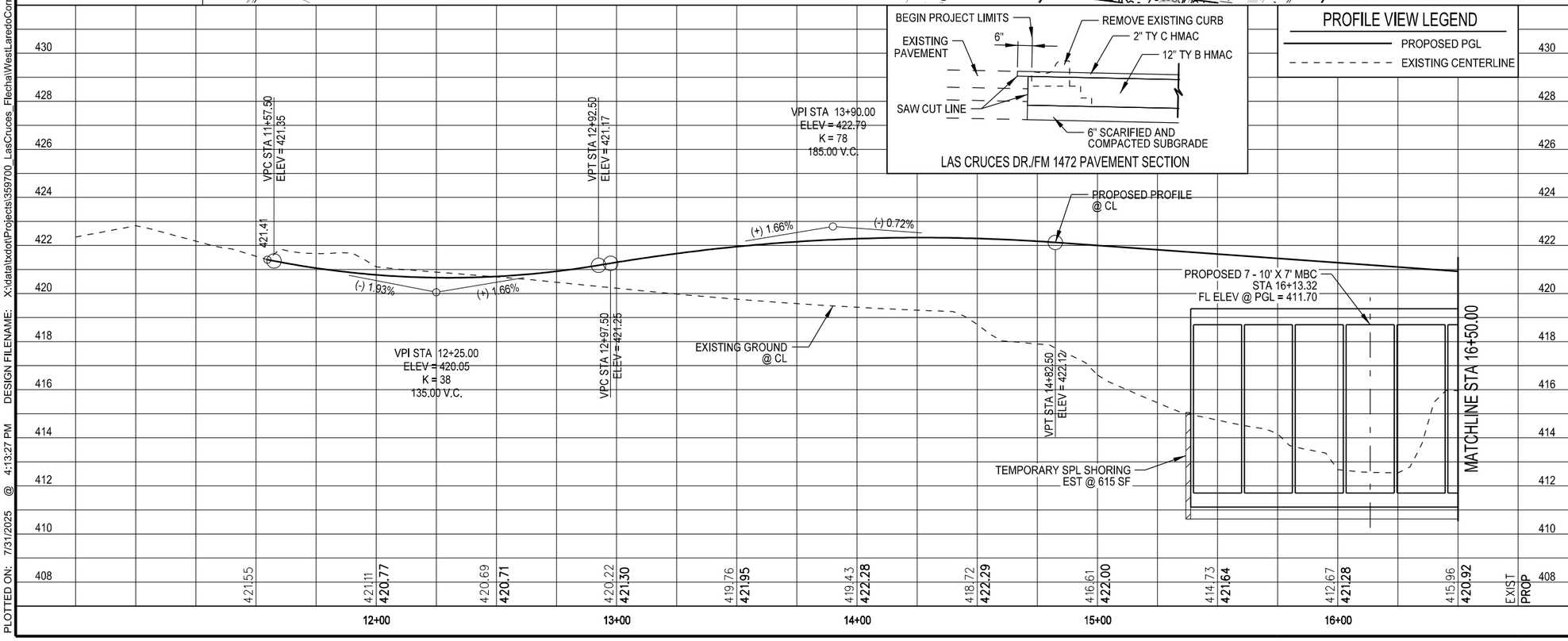

STATE OF TEXAS
KYLE GASS
94833
LICENSED PROFESSIONAL ENGINEER

KYLE GASS, P.E.
7/31/2025

LAS CRUCES REALIGNMENT

PLAN & PROFILE SHEETS STA 11+54.73 TO STA 16+50.00

SHEET 1 OF 2

KCI TECHNOLOGIES, INC.
2806 W. BITTERS RD. - SUITE 218
SAN ANTONIO, TX 78248 - 210.641.9999
TEXAS REGISTERED ENGINEERING FIRM
TBPE FIRM No. F-10573
www.kci.com

Texas Department of Transportation

FED.RD. DIV.NO.	FEDERAL AID PROJECT NO.		SHEET NO.
6	DMO 2012 (628)		69
STATE	DIST.	COUNTY	
TEXAS	LRD	WEBB	
CONT.	SECT.	JOB	HIGHWAY NO.
0922	33	076	CS

PLOTTED ON: 7/31/2025 @ 4:13:27 PM DESIGN FILENAME: X:\data\txdot\Projects\359700_LasCruces_Flecha\WestLaredoCorridor\ROADWAY\LasCruces_PP_01.dgn

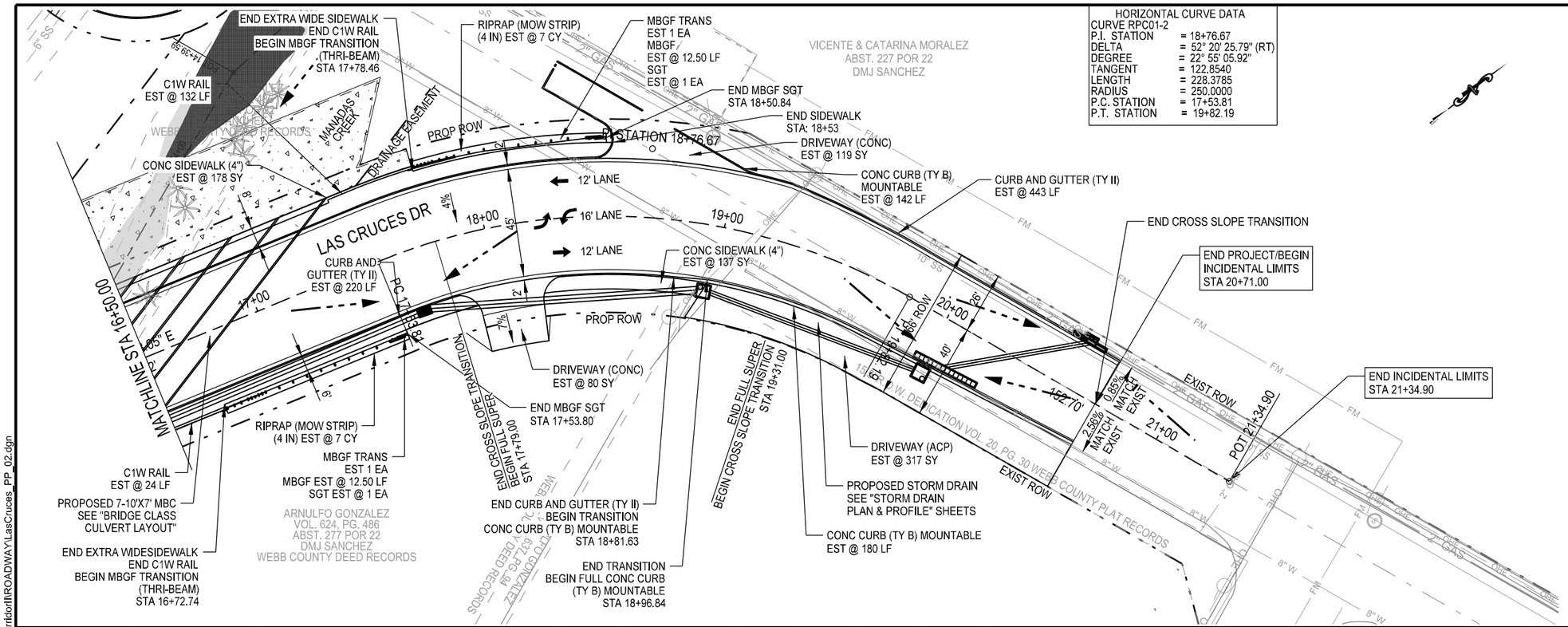

HORIZONTAL CURVE DATA	
CURVE RPC01-2	
P.I. STATION	= 18+76.67
DELTA	= 52° 20' 25.79" (RT)
DEGREE	= 22° 55' 05.92"
TANGENT	= 122.8540
LENGTH	= 228.3785
RADIUS	= 250.0000
P.C. STATION	= 17+53.81
P.T. STATION	= 19+82.19

PLAN VIEW LEGEND

- PROP EDGE OF ROADWAY
- EXISTING FEATURES
- EXISTING RIGHT OF WAY
- PROPOSED RIGHT OF WAY
- DRAINAGE EASEMENT
- FLOW ARROW
- JURISDICTIONAL WATERS WILL BE DISTURBED
- JURISDICTIONAL WATERS TO BE PRESERVED. DO NOT DISTURB THIS AREA

NOTE:
SEE BRIDGE CLASS CULVERT LAYOUT FOR C1W RAIL BEGIN AND END STATIONS.

SEE BRIDGE CLASS CULVERT LAYOUT FOR EXTRA WIDE SIDEWALK DETAILS.

SEE MISCELLANEOUS ROADWAY DETAILS SHEET 2 OF 2 FOR CONC CURB (TY B) MOUNTABLE AND CURB TRANSITION.

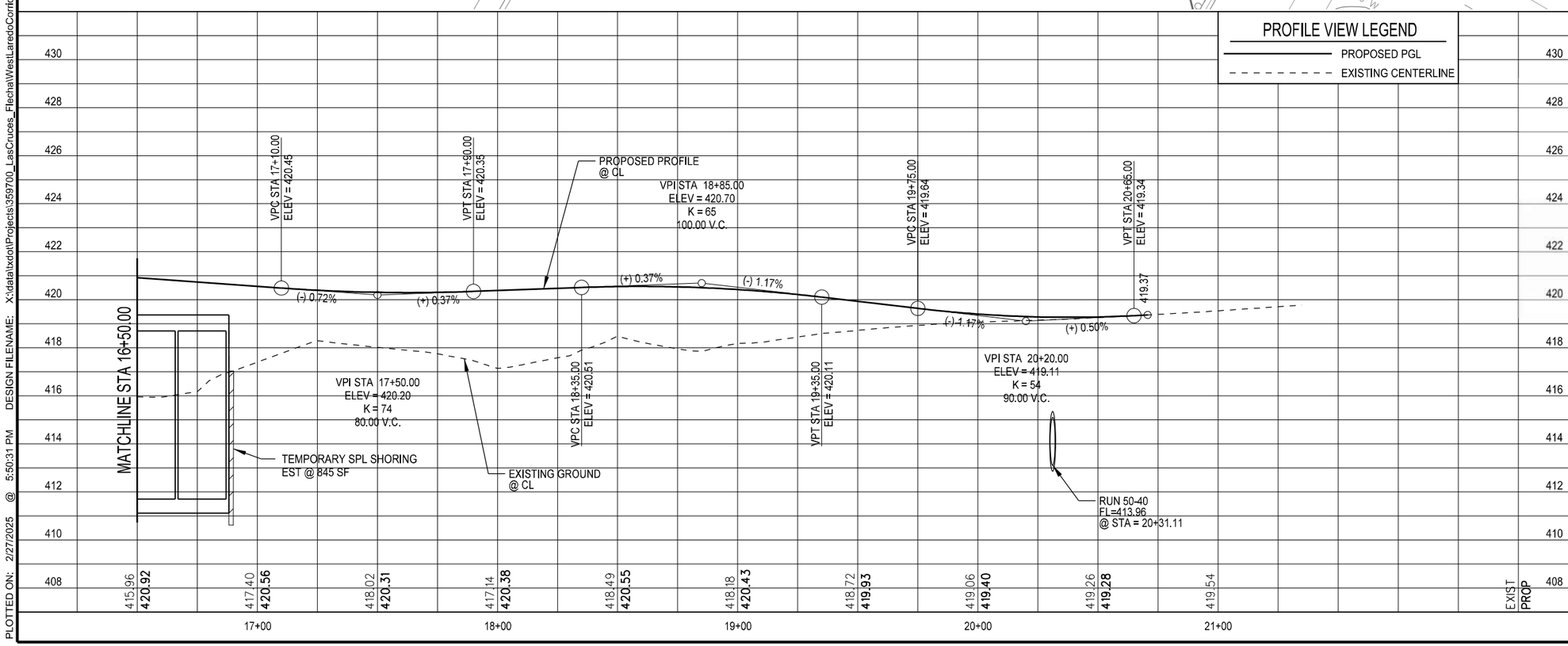

GRAPHIC SCALE
(IN FEET)
25 12.5 0 25 50 75
1" = 50'
Vert: 1" = 5'

STATE OF TEXAS
KYLE GASS
94833
LICENSED
PROFESSIONAL ENGINEER

KYLE GASS, P.E.
7/31/2025

LAS CRUCES REALIGNMENT

PLAN & PROFILE SHEETS
STA 16+50.00 TO STA 20+71.00

SHEET 2 OF 2

KCI TECHNOLOGIES, INC.
2806 W. BITTERS RD. - SUITE 218
SAN ANTONIO, TX 78248 - 210.641.9999
TEXAS REGISTERED ENGINEERING FIRM
TBPE FIRM No. F-10573
www.kci.com

Texas Department of Transportation

FED.RD. DIV.NO.	FEDERAL AID PROJECT NO.		SHEET NO.
6	DMO 2012 (628)		70
STATE	DIST.	COUNTY	
TEXAS	LRD	WEBB	
CONT.	SECT.	JOB	HIGHWAY NO.
0922	33	076	CS

PLOTTED ON: 2/27/2025 @ 5:50:31 PM DESIGN FILENAME: X:\data\xdot\Projects\359700_LasCruces_Flecha\WestLaredoCorridor\ROADWAY\LasCruces_PP_02.dgn

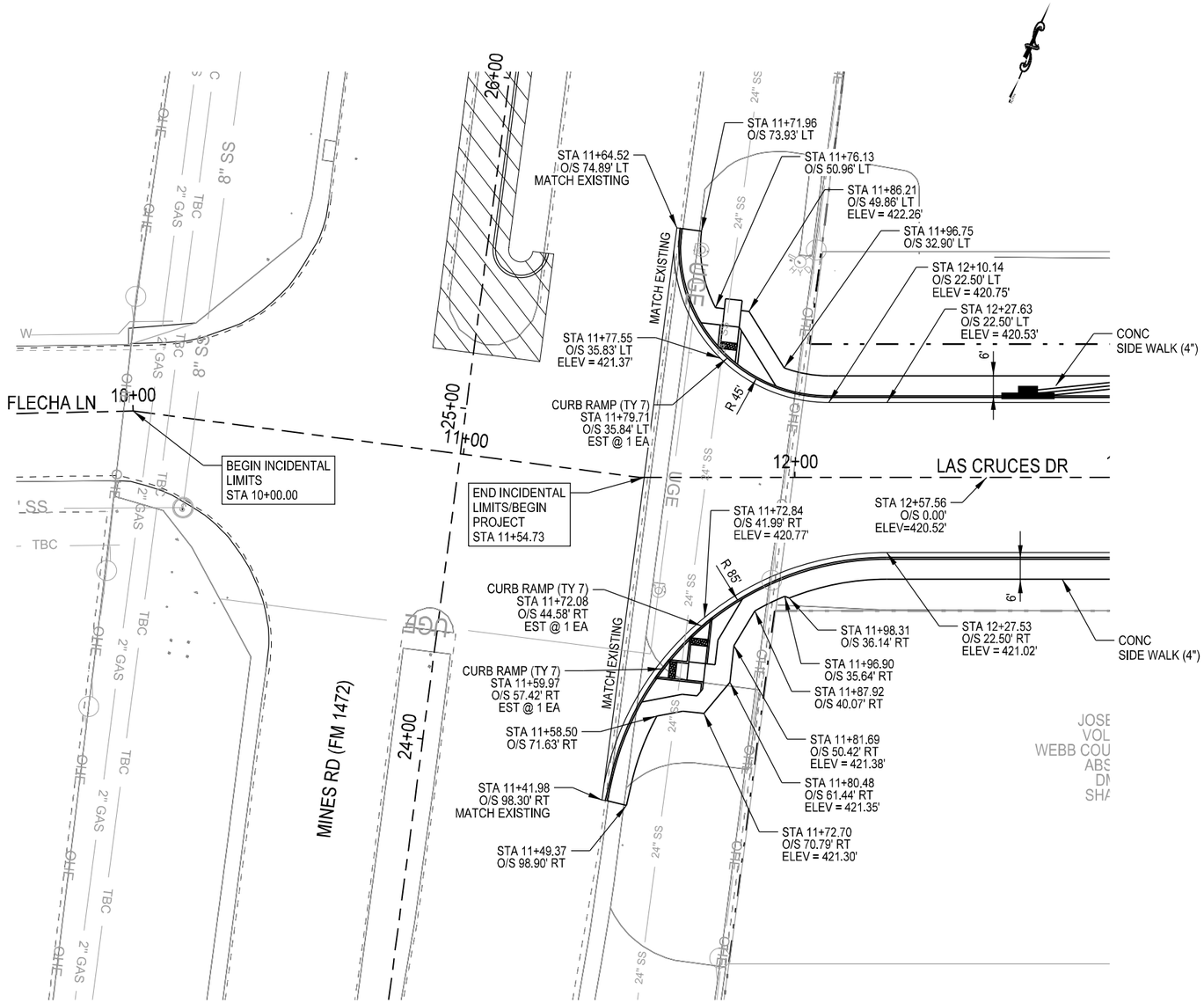

NOTE: ELEVATIONS GIVEN AT EDGE OF PAVEMENT

GRAPHIC SCALE
(IN FEET)
20 10 0 20 40 60
1" = 40'

STATE OF TEXAS
KYLE GASS
94833
LICENSED PROFESSIONAL ENGINEER

KYLE GASS, P.E.
7/31/2025

LAS CRUCES REALIGNMENT

INTERSECTION LAYOUT

SHEET 1 OF 1

KCI TECHNOLOGIES, INC.
2806 W. BITTERS RD. - SUITE 218
SAN ANTONIO, TX 78248 - 210.641.9999
TEXAS REGISTERED ENGINEERING FIRM
TBPE FIRM No. F-10573
www.kci.com

Texas Department of Transportation

FED.RD. DIV.NO.	FEDERAL AID PROJECT NO.		SHEET NO.
6	DMO 2012 (628)		71
STATE	DIST.	COUNTY	
TEXAS	LRD	WEBB	
CONT.	SECT.	JOB	HIGHWAY NO.
0922	33	076	CS

PLOTTED ON: 2/24/2025 @ 7:18:40 PM DESIGN FILENAME: X:\data\txdot\Projects\359700_LasCruces_Flecha\WestLaredoCorridor\ROADWAY\LasCruces_INT_01.dgn

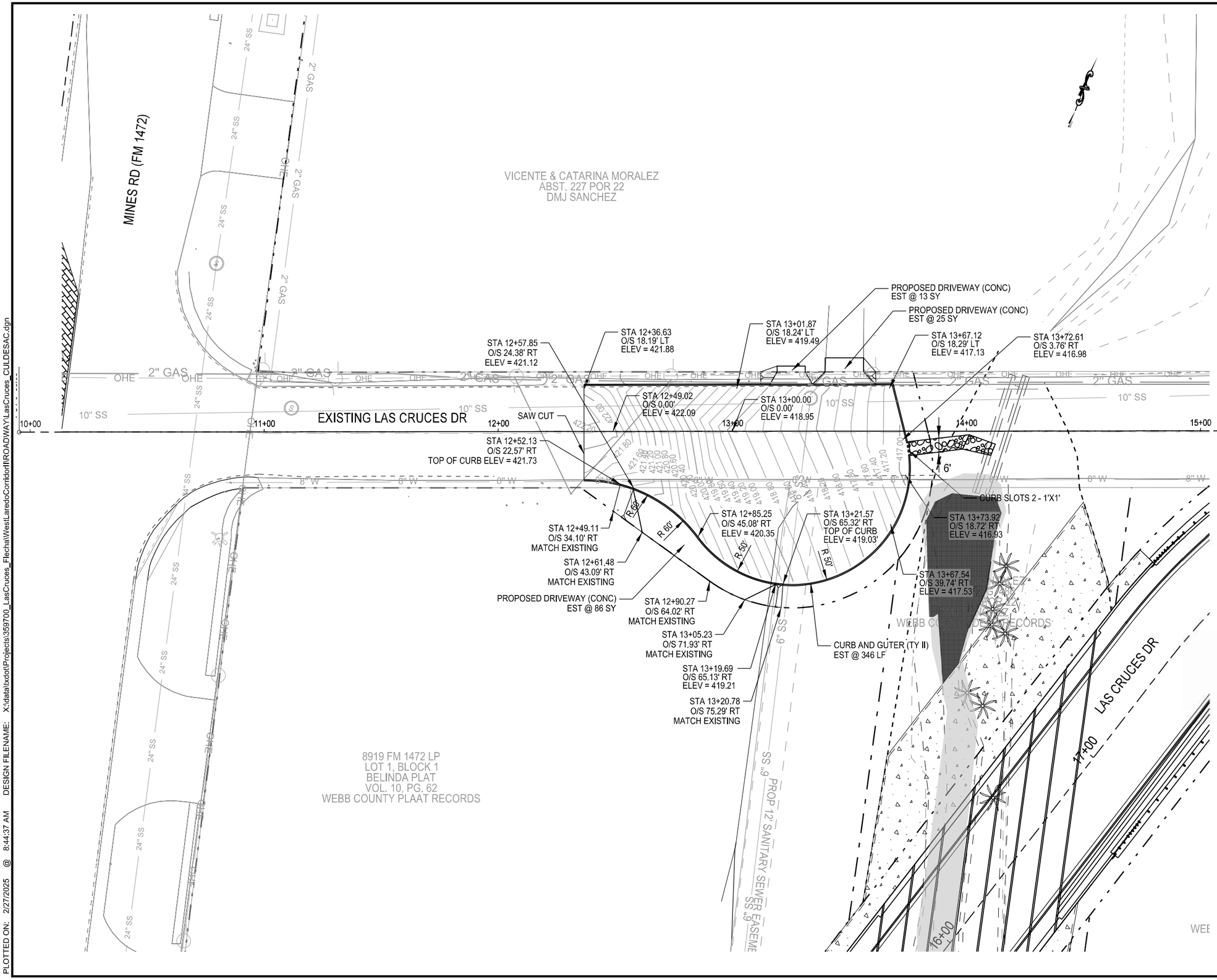

PLAN VIEW LEGEND

- JURISDICTIONAL WATERS WILL BE DISTURBED
- JURISDICTIONAL WATERS TO BE PRESERVED. DO NOT DISTURB THIS AREA

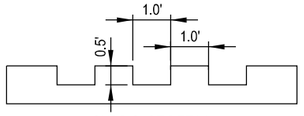

CURB SLOT DETAIL

NOTES:
1. ELEVATIONS GIVEN AT EDGE OF PAVEMENT
2. SEE DRIVEWAY DETAILS SHEETS FOR DRIVEWAY INFORMATION
3. CULDESAC PAVEMENT SECTION TO MATCH PROPOSED LAS CRUCES SECTION
4. ALL CURB SHOWN IS CURB AND GUTTER (TY II)
5. REFER TO DRIVEWAY DETAIL SHEET FOR ADDITIONAL INFORMATION.

GRAPHIC SCALE
(IN FEET)
20 10 0 20 40 60
1" = 40'

STATE OF TEXAS
KYLE GASS
94833
LICENSED PROFESSIONAL ENGINEER

KYLE GASS, P.E.
7/31/2025

LAS CRUCES REALIGNMENT

LAS CRUCES CULDESAC

SHEET 1 OF 1

KCI TECHNOLOGIES, INC.
2806 W. BITTERS RD. - SUITE 218
SAN ANTONIO, TX 78248 - 210.641.9999
TEXAS REGISTERED ENGINEERING FIRM
TBPE FIRM No. F-10573
www.kci.com

Texas Department of Transportation

FED.RD. DIV.NO.	FEDERAL AID PROJECT NO.		SHEET NO.
6	DMO 2012 (628)		72
STATE	DIST.	COUNTY	
TEXAS	LRD	WEBB	
CONT.	SECT.	JOB	HIGHWAY NO.
0922	33	076	CS

PLOTTED ON: 2/27/2025 @ 8:44:37 AM DESIGN FILENAME: X:\data\txdot\Projects\359700_LasCruces_FlechaWestLaredoCorridor\IROADWAY\LasCruces_CULDESAC.dgn

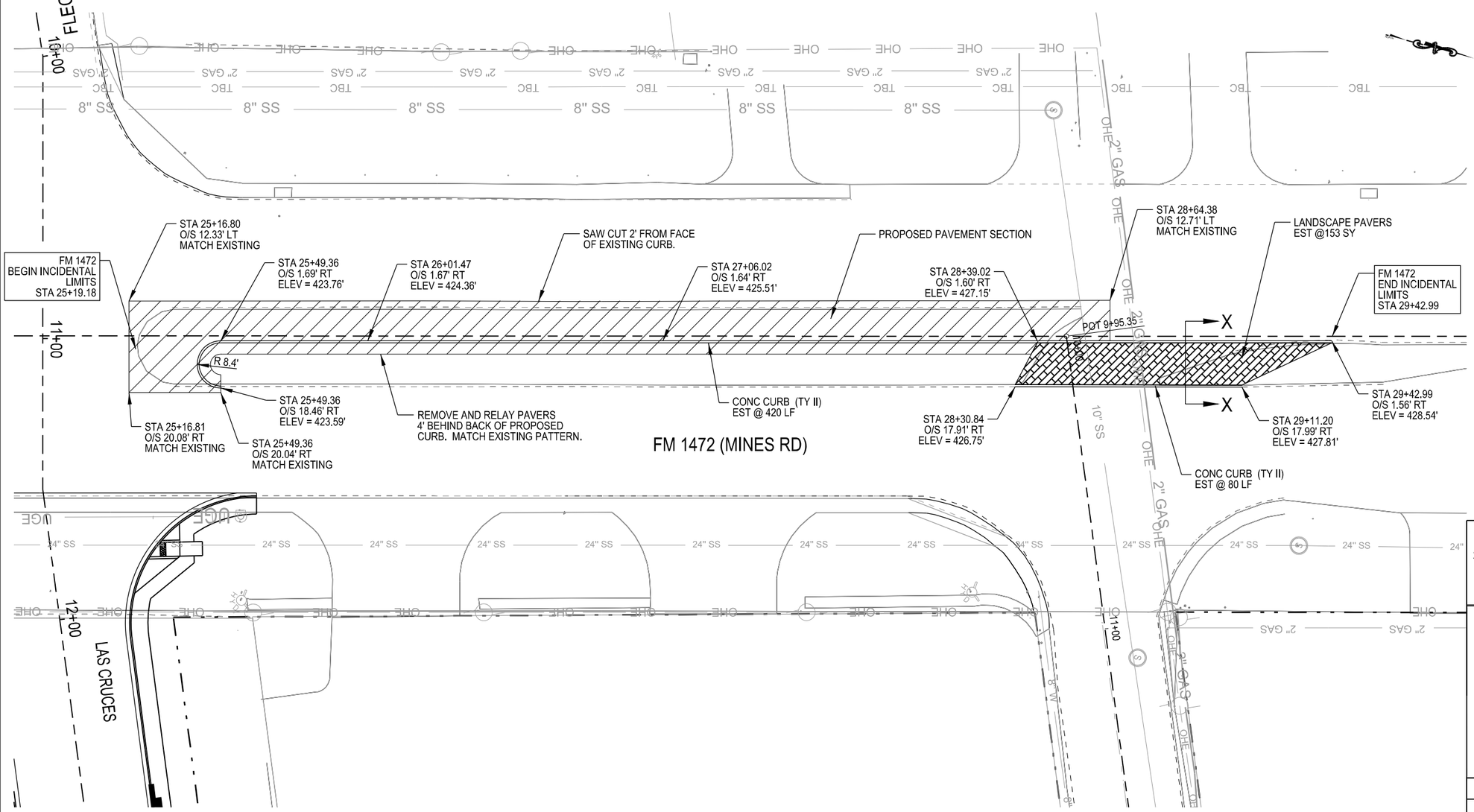

NOTE:

1. MATCH EXISTING SIZE, COLOR AND PATTERN OF MEDIAN PAVERS.
2. ALL STATIONS AND OFFSETS REFER TO FM 1472 (MINES RD) UNLESS OTHERWISE NOTED.
3. SEE MISCELLANEOUS ROADWAY DETAIL FOR CONC CURB (TY II)
4. ALL SAW CUTTING WILL BE SUBSIDIARY TO ITEM 341.

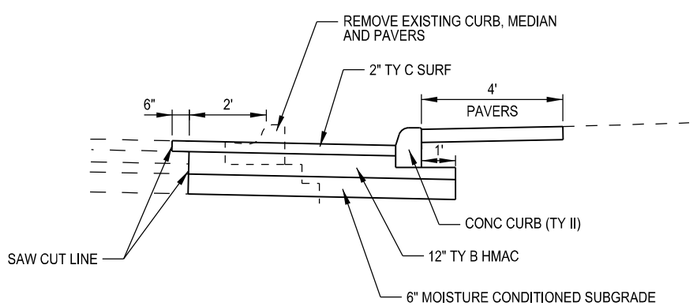

MINES ROAD PAVEMENT SECTION

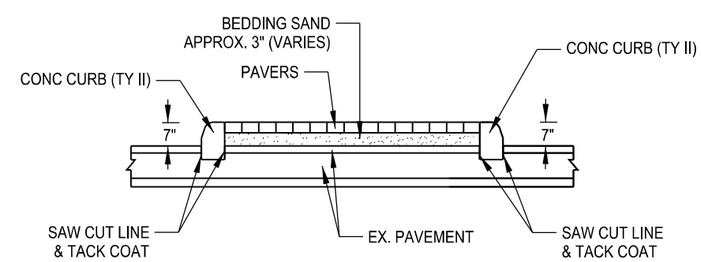

MEDIAN SECTION X-X

GRAPHIC SCALE
(IN FEET)
20 10 0 20 40 60
1" = 40'

STATE OF TEXAS
KYLE GASS
94833
LICENSED
PROFESSIONAL ENGINEER

KYLE GASS, P.E.
7/31/2025

LAS CRUCES REALIGNMENT

FM 1472 (MINES RD)
LEFT TURN LANE

SHEET 1 OF 1

KCI TECHNOLOGIES, INC.
2806 W. BITTERS RD. - SUITE 218
SAN ANTONIO, TX 78248 - 210.641.9999
TEXAS REGISTERED ENGINEERING FIRM
TBPE FIRM No. F-10573
www.kci.com

Texas Department of Transportation

FED.RD. DIV.NO.	FEDERAL AID PROJECT NO.		SHEET NO.
6	DMO 2012 (628)		73
STATE	DIST.	COUNTY	
TEXAS	LRD	WEBB	
CONT.	SECT.	JOB	HIGHWAY NO.
0922	33	076	CS

PLOTTED ON: 2/24/2025 @ 7:18:41 PM DESIGN FILENAME: X:\data\txdot\Projects\359700_LasCruces_FlechaWestLaredoCorridor\ROADWAY\FM1472_LT_TRN-LN.dgn

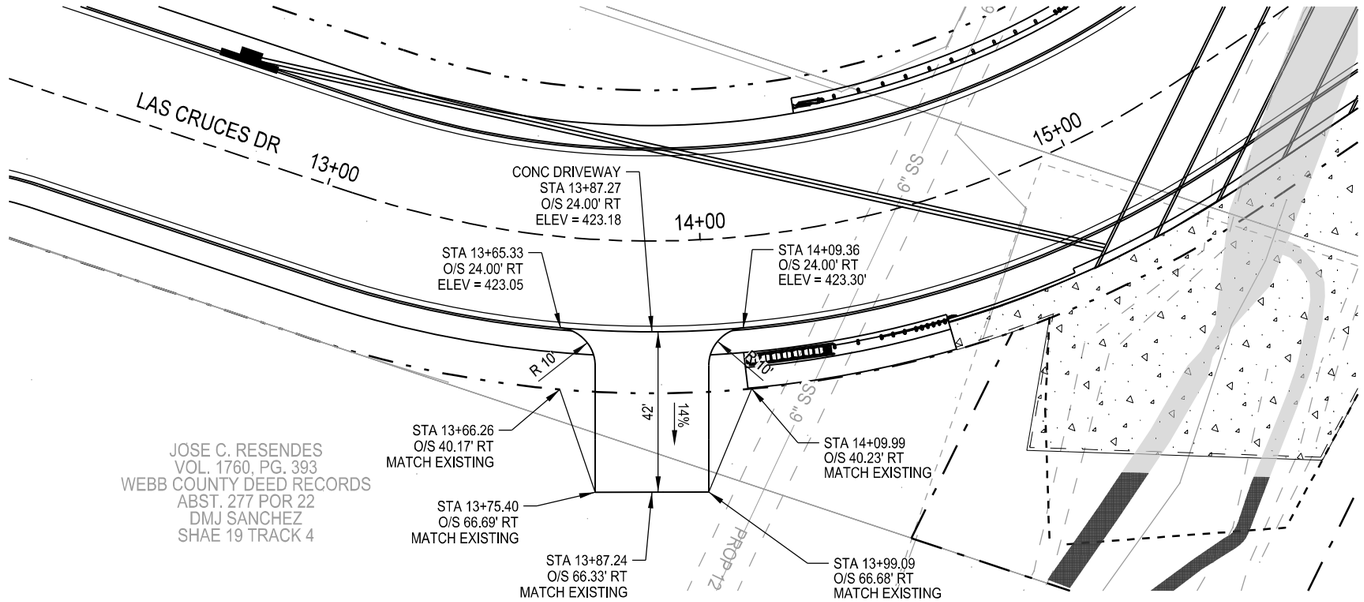

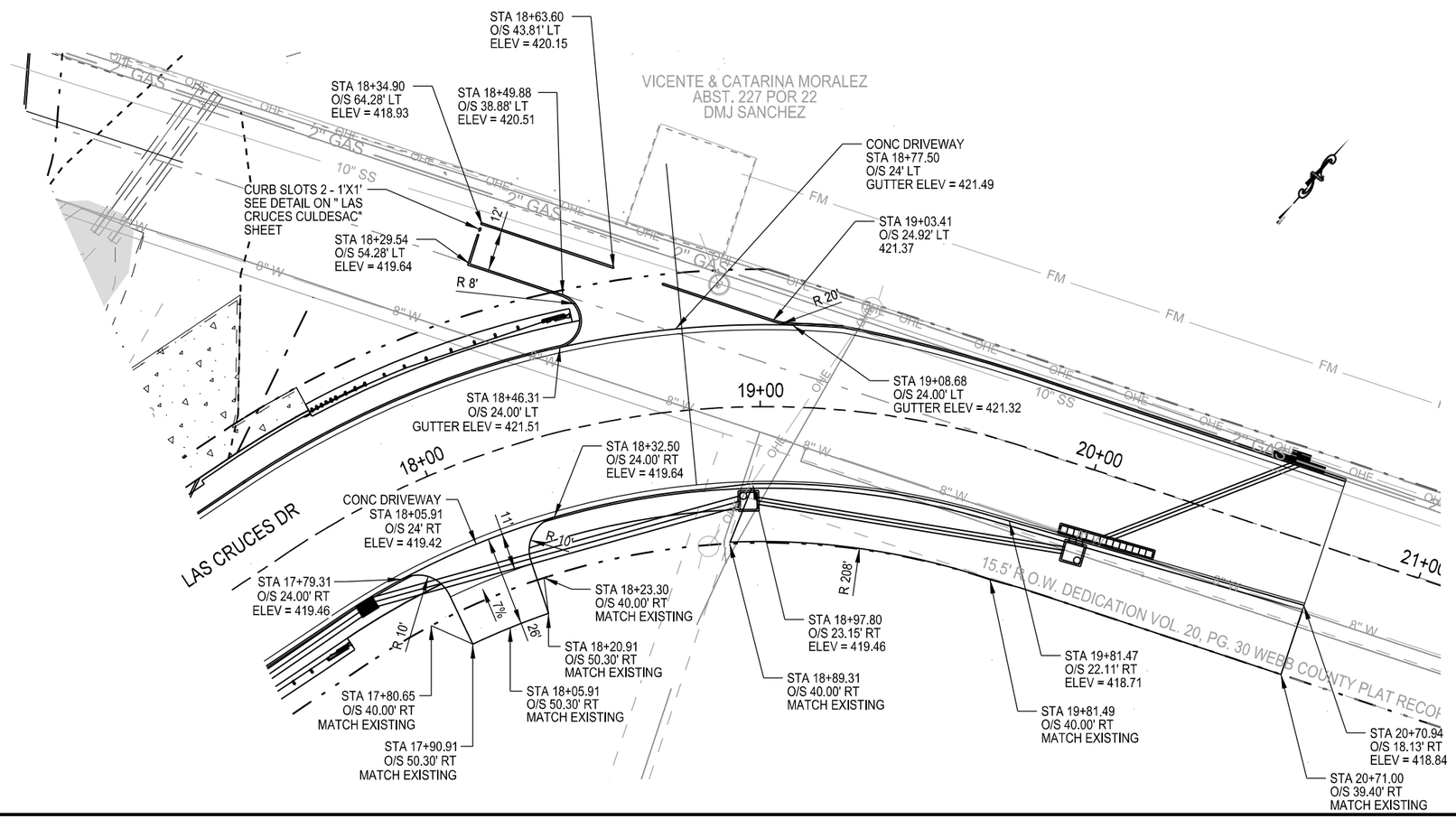

PLAN VIEW LEGEND

- JURISDICTIONAL WATERS WILL BE DISTURBED
- JURISDICTIONAL WATERS TO BE PRESERVED. DO NOT DISTURB THIS AREA

NOTE:
1. ELEVATIONS GIVEN AT GUTTER LINE UNLESS OTHERWISE NOTED.
2. REFER TO CROSS SECTIONS FOR ADDITIONAL INFORMATION.

GRAPHIC SCALE
(IN FEET)
20 10 0 20 40 60
1" = 40'

STATE OF TEXAS
KYLE GASS
94833
LICENSED
PROFESSIONAL ENGINEER

KYLE GASS, P.E.
7/31/2025

LAS CRUCES REALIGNMENT

DRIVEWAY DETAILS

SHEET 1 OF 2

KCI TECHNOLOGIES, INC.
2806 W. BITTERS RD. - SUITE 218
SAN ANTONIO, TX 78248 - 210.641.9999
TEXAS REGISTERED ENGINEERING FIRM
TBPE FIRM No. F-10573
www.kci.com

Texas Department of Transportation

FED.RD. DIV.NO.	FEDERAL AID PROJECT NO.		SHEET NO.
6	DMO 2012 (628)		74
STATE	DIST.	COUNTY	
TEXAS	LRD	WEBB	
CONT.	SECT.	JOB	HIGHWAY NO.
0922	33	076	CS

PLOTTED ON: 2/27/2025 @ 5:50:33 PM DESIGN FILENAME: X:\data\txdot\Projects\359700_LasCruces_Flecha\WestLaredoCorridor\ROADWAY\LasCruces_DRVWY_DETAIL_01.dgn

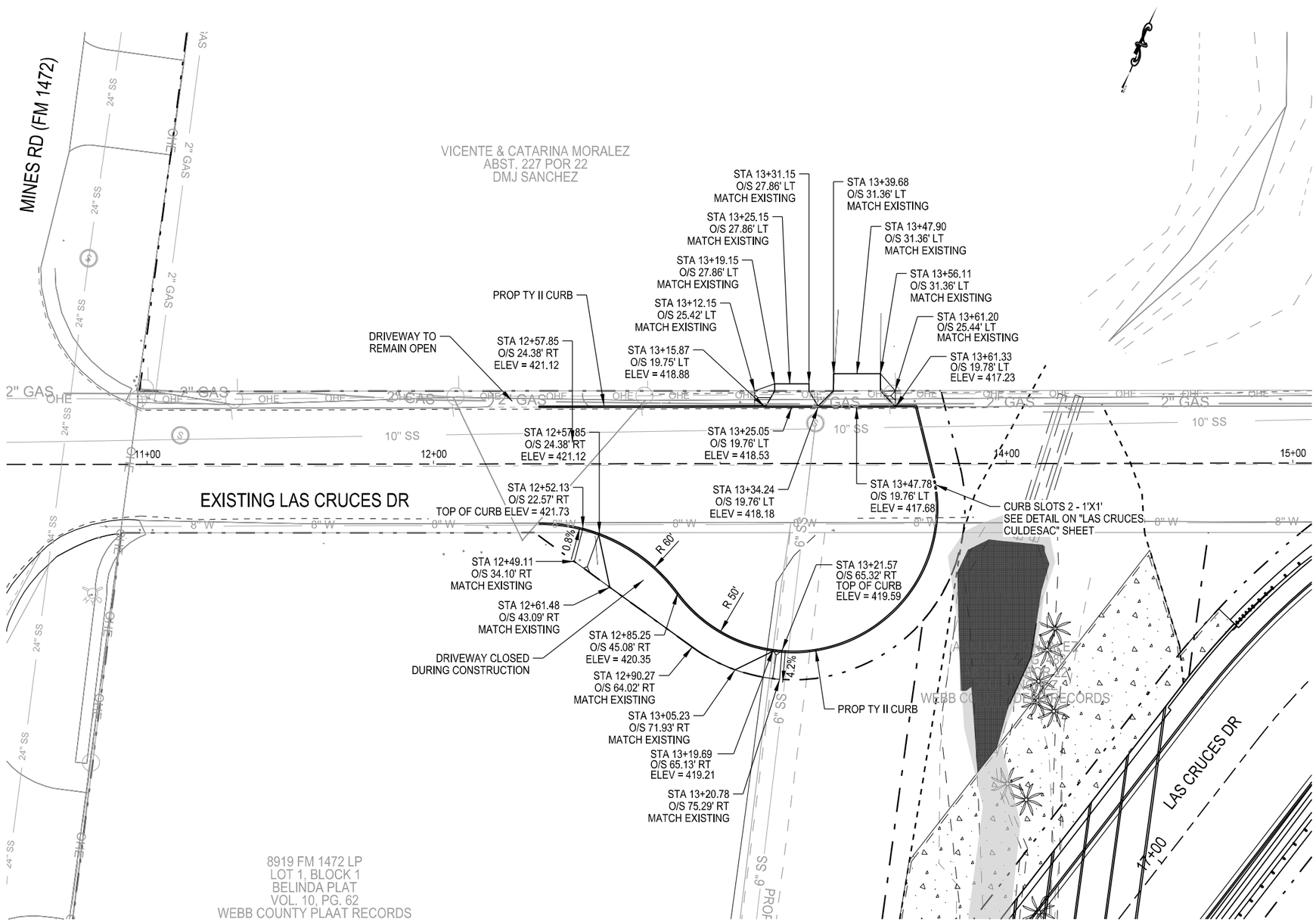

PLAN VIEW LEGEND

- JURISDICTIONAL WATERS WILL BE DISTURBED
- JURISDICTIONAL WATERS TO BE PRESERVED. DO NOT DISTURB THIS AREA

NOTES:
1. ELEVATIONS GIVEN AT GUTTER LINE UNLESS OTHERWISE NOTED.
2. SEE LAS CRUCES CULDESAC SHEET FOR GRADING INFORMATION.
3. ALL CURB SHOWN IS CURB AND GUTTER (TY II)
4. SEE "LAS CRUCES CULDESAC" SHEET FOR MORE INFORMATION

GRAPHIC SCALE
(IN FEET)
20 10 0 20 40 60
1" = 40'

STATE OF TEXAS
KYLE GASS
94833
LICENSED
PROFESSIONAL ENGINEER

KYLE GASS, P.E.
7/31/2025

LAS CRUCES REALIGNMENT

DRIVEWAY DETAILS

SHEET 2 OF 2

KCI TECHNOLOGIES, INC.
2806 W. BITTERS RD. - SUITE 218
SAN ANTONIO, TX 78248 - 210.641.9999
TEXAS REGISTERED ENGINEERING FIRM
TBPE FIRM No. F-10573
www.kci.com

Texas Department of Transportation

FED.RD. DIV.NO.	FEDERAL AID PROJECT NO.		SHEET NO.
6	DMO 2012 (628)		75
STATE	DIST.	COUNTY	
TEXAS	LRD	WEBB	
CONT.	SECT.	JOB	HIGHWAY NO.
0922	33	076	CS

PLOTTED ON: 2/27/2025 @ 8:44:39 AM DESIGN FILENAME: X:\data\txdot\Projects\359700_LasCruces_Flecha\WesLaredoCorridor\ROADWAY\LasCruces_DRVWY_DETAIL_02.dgn

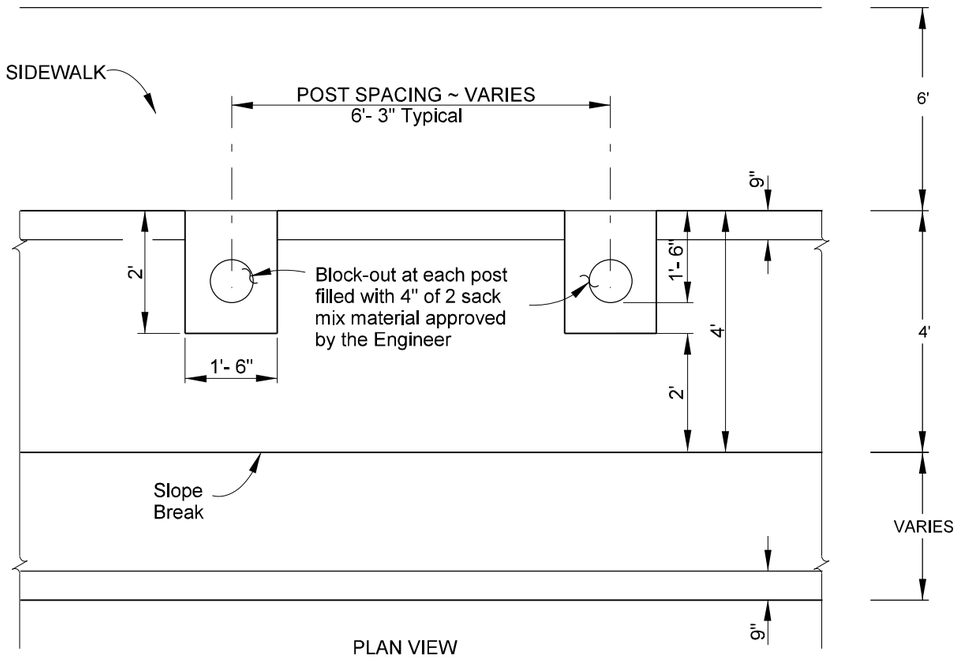

PLAN VIEW

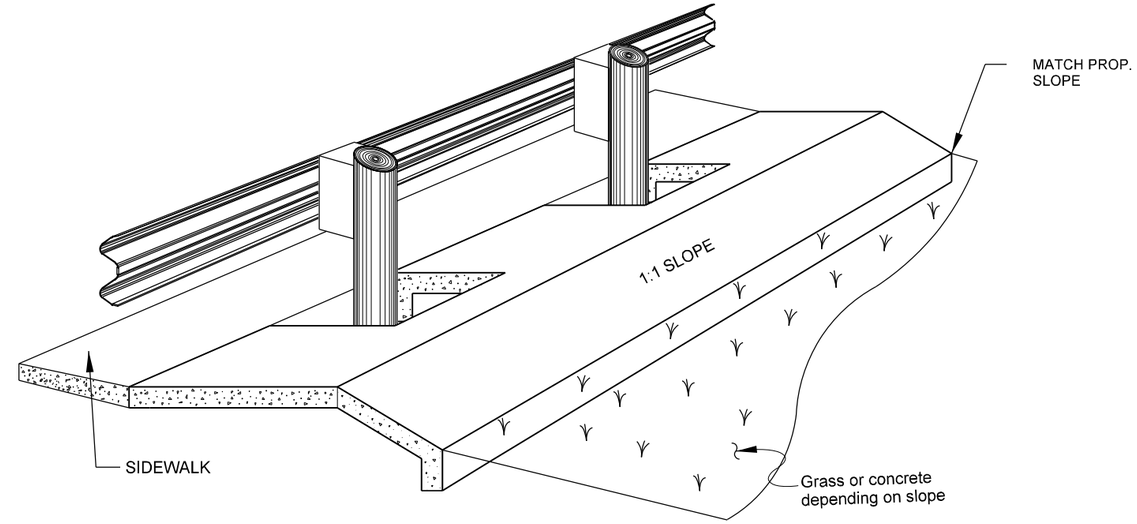

MBGF RIPRAP DETAILS

NOTES:

1. NOT TO SCALE.
2. AT THE END OF MBGF RUNS, WHERE RAIL FLARES AWAY FROM ROADWAY EDGE AT A 25:1 TAPER, WIDEN THE 4' CONCRETE APRON TO MAINTAIN 2'- 0" +/- OF CONCRETE BEHIND THE POSTS.

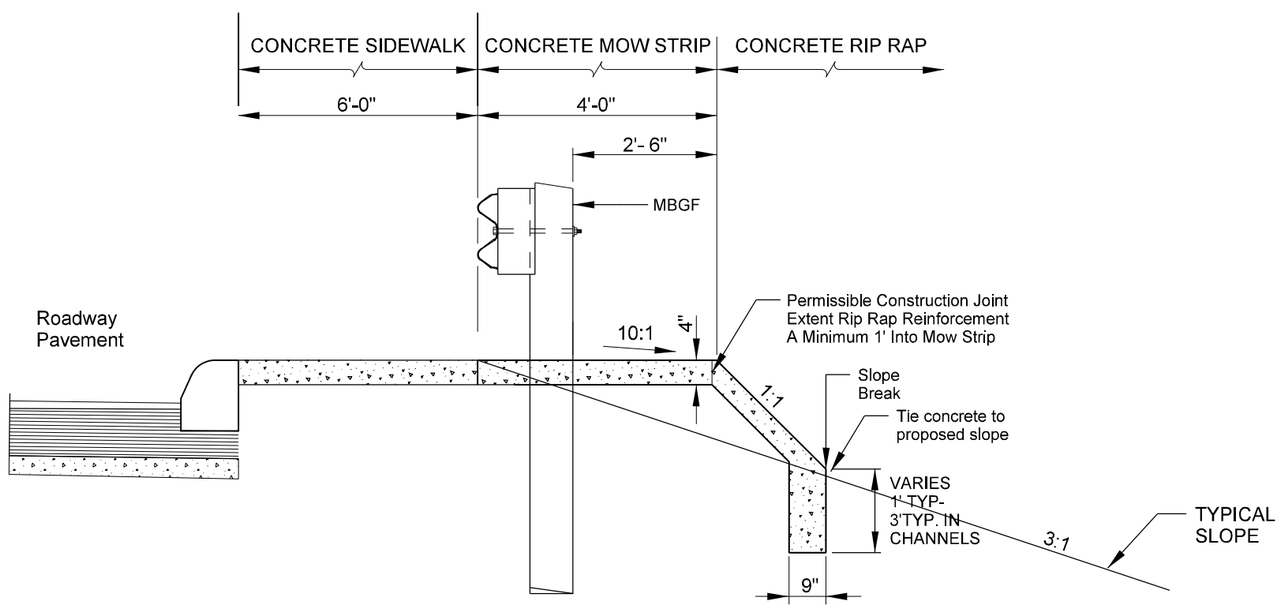

SECTION SHOWING CONCRETE APRON
WOOD POST (MBGF)

STATE OF TEXAS
KYLE GASS
94833
LICENSED PROFESSIONAL ENGINEER

KYLE GASS, P.E.
7/31/2025

LAS CRUCES REALIGNMENT

MISCELLANEOUS ROADWAY DETAILS

SHEET 1 OF 2

KCI TECHNOLOGIES, INC.
2806 W. BITTERS RD. - SUITE 218
SAN ANTONIO, TX 78248 - 210.641.9999
TEXAS REGISTERED ENGINEERING FIRM
TBPE FIRM No. F-10573
www.kci.com

Texas Department of Transportation

FED.RD. DIV.NO.	FEDERAL AID PROJECT NO.		SHEET NO.
6	DMO 2012 (628)		76
STATE	DIST.	COUNTY	
TEXAS	LRD	WEBB	
CONT.	SECT.	JOB	HIGHWAY NO.
0922	33	076	CS

PLOTTED ON: 2/24/2025 @ 7:23:05 PM DESIGN FILENAME: X:\data\txdot\Projects\359700_LasCruces_FlechaWestLaredoCorridor\\GENERAL\LasCruces_MISC_RDWY_DTLS_01 - MOW STRIP.dgn

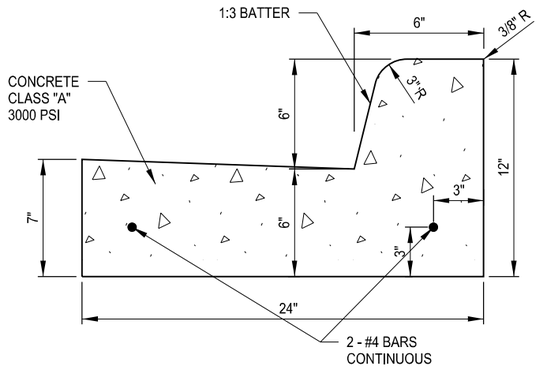

CONC CURB & GUTTER (TY II)

(LAYDOWN CURB WHERE DRIVEWAYS ARE TO BE LOCATED)

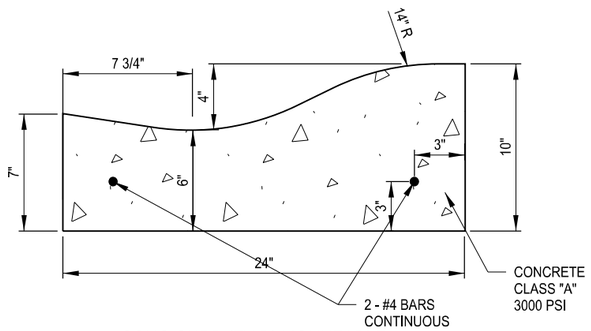

CONC CURB (TY B) MOUNTABLE

(FORM LAID OR MACHINE LAID)

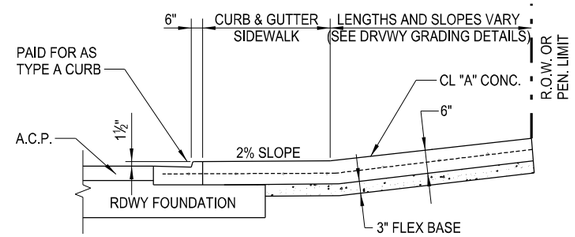

RESIDENTIAL: MIN. 6" 3000 PSI CONCRETE
6" x 6"- W 2.9 x W 2.9 WIRE REINFORCEMENT
OR EQUIV. BAR REINFORCEMENT IN CENTER OF SLAB

COMMERCIAL: MIN. 7" 3000 PSI CONCRETE
REINF. WITH NO. 3 REBAR @ 24" O.C.

CONCRETE DRIVEWAY DETAIL

*NOTE: ON CONCRETE DRIVEWAYS, THE 3" OF FLEX BASE SHALL BE SUBSIDIARY WORK AND SHALL BE INCLUDED IN THE UNIT PRICE BID FOR "CONCRETE DRIVEWAYS".

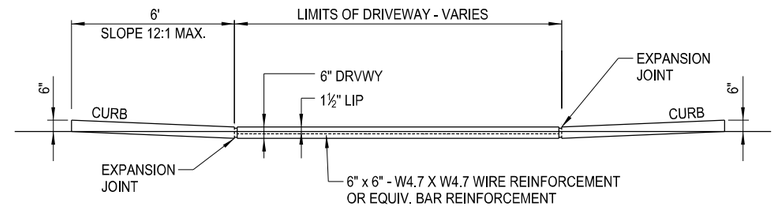

DRIVEWAY SECTION AT FACE OF CURB

SIDEWALK ABUTTING CURB

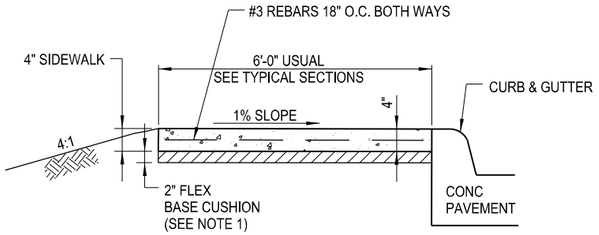

CONCRETE SIDEWALK DETAILS

GROOVED JOINTS IN THE SIDEWALK SHALL BE AT A MAX. SPACING OF 10 FT.
AND SHALL HAVE ¾" EXPANSION JOINTS AT A MAX. SPACING OF 40' AND TO COINSIDE WITH THE CURB EXP. JOINTS.

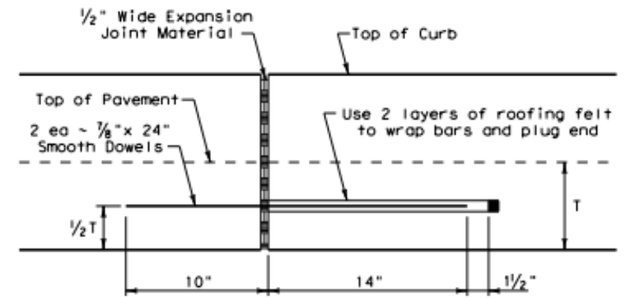

TYPICAL CURB EXPANSION JOINT DETAIL

JOINTS TO BE PLACED AT BEGINNING AND END OF CURVES AND AT OTHER LOCATIONS AS SHOWN IN PLANS OR AS DIRECTED BY THE ENGINEER.

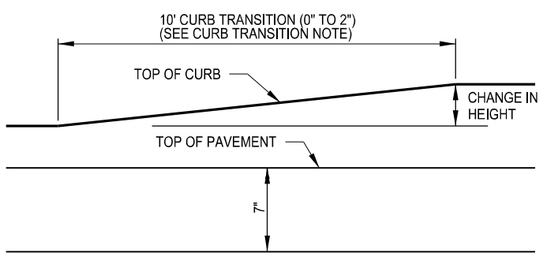

CURB TRANSITION

NOTE: TO BE PAID FOR AS HIGHEST CURB

CURB TRANSITION NOTE:
FIELD CONDITIONS MAY REQUIRE A LONGER OR SHORTER TRANSITION, AND SHALL BE SHOWN ELSEWHERE IN THE PLANS, OR AS DIRECTED BY THE ENGINEER.

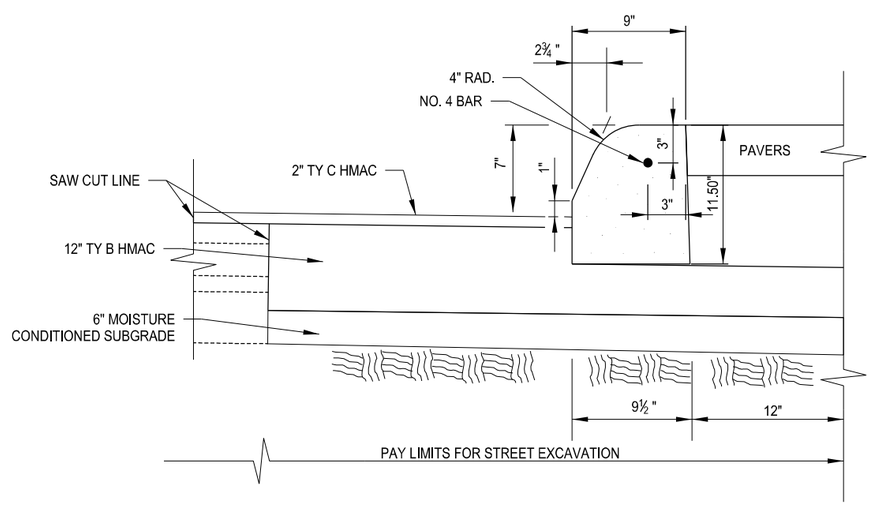

CONC CURB (TY II)

CURB NOTES:
REINFORCING BARS SHALL BE LAPPED A MINIMUM OF 15".

WHEN CURB IS PLACED BY A SEPARATE POUR ADJACENT TO OR ATOP CONCRETE PAVEMENT, CURB SHALL BE TIED TO PAVEMENT IN A MANNER SATISFACTORY TO THE ENGINEER WITH 8" LONG #3 OR #4 BARS SPACED AT 5 FT AND EXPANSION AND/OR CONTRACTION JOINTS OF CURB SHALL MATCH THOSE OF PAVEMENT.

WHEN CURB IS NOT CONSTRICTED ADJACENT TO CONCRETE PAVEMENT, THE FOLLOWING SHALL GOVERN:

A. CURB SHALL HAVE FORMED, TOOLED OR SAWED CONTRACTION JOINTS AT 10' +/-. THE DEPTH OF THESE JOINTS SHALL BE SUFFICIENT TO ENSURE CRACKING AT THE JOINTS.
B. CURB SHALL HAVE EXPANSION JOINTS AT POINTS OF CURVATURE AND LENGTHS GREATER THAN 8' BUT LESS THAN 40' IN ALL CURVES AND AT CURB INLETS, ETC.

ONE-HALF INCH EXPANSION JOINT MATERIAL SHALL BE PROVIDED WHERE CURB OR CURB GUTTER IS ADJACENT TO SIDEWALK OR RIPRAP.

UNLESS OTHERWIDE SHOWN, TRANSITIONS BETWEEN CURBS OR DIFFERING CROSS SECTION SHALL BE ACCOMPLISHED OVER A 20 FOOT LENGTH OR AS APPROVED BY THE ENGINEER.

NOTES:

1. THE FLEX BASE CUSHION UNDER SIDEWALKS AND DRIVEWAYS MAY BE OF ANY TYPE AND GRADE APPROVED BY THE ENGINEER. THE FLEX BASE WILL BE SPRINKLED AND ROLLED/ TAMPED AS APPROVED BY THE ENGINEER. FURNISHING AND PLACING THE BASE CUSHION WILL BE SUBSIDIARY TO THE SIDEWALKS AND DRIVEWAY ITEMS.

2. SEE TXDOT STANDARD SHEET "PED-05" FOR SIDEWALK RAMP MATERIAL DETAILS AND CURB TRANSITION DETAILS.

STATE OF TEXAS
KYLE GASS
94833
LICENSED
PROFESSIONAL ENGINEER

KYLE GASS, P.E.
7/31/2025

LAS CRUCES REALIGNMENT

MISCELLANEOUS ROADWAY DETAILS

SHEET 2 OF 2

KCI TECHNOLOGIES, INC.
2806 W. BITTERS RD. - SUITE 218
SAN ANTONIO, TX 78248 - 210.641.9999
TEXAS REGISTERED ENGINEERING FIRM
TBPE FIRM No. F-10573
www.kci.com

Texas Department of Transportation

FED.RD. DIV.NO.	FEDERAL AID PROJECT NO.		SHEET NO.
6	DMO 2012 (628)		77
STATE	DIST.	COUNTY	
TEXAS	LRD	WEBB	
CONT.	SECT.	JOB	HIGHWAY NO.
0922	33	076	CS

PLOTTED ON: 2/24/2025 @ 7:24:25 PM DESIGN FILENAME: X:\data\txdot\Projects\359700_LasCruces_Flecha\WestLaredoCorridor\\GENERAL\LasCruces_MISC_RDWY_DTLS_02.dgn

DISCLAIMER:
The use of this standard is governed by the "Texas Engineering Practice Act". No warranty of any kind is made by TxDOT for any purpose whatsoever. TxDOT assumes no responsibility for the conversion of this standard to other formats or for incorrect results or damages resulting from its use.

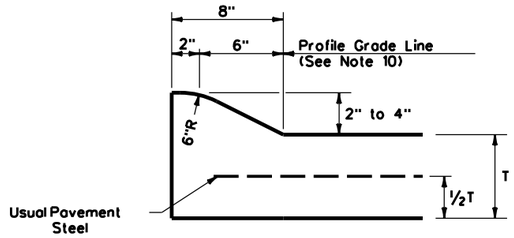

TYPE I CURB (MONOLITHIC)
2" - 4" HEIGHT

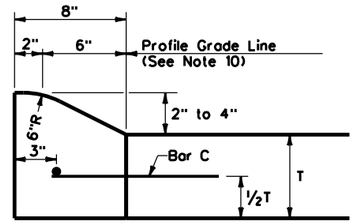

TYPE I CURB
2" - 4" HEIGHT

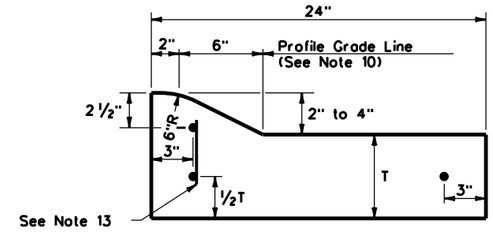

TYPE I CURB AND GUTTER
2" - 4" HEIGHT

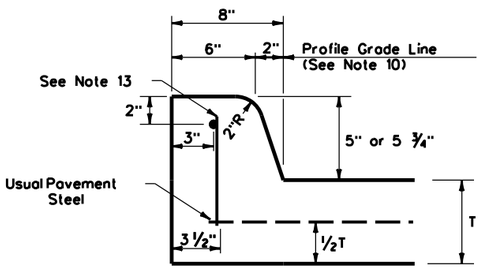

TYPE II CURB (MONOLITHIC)
5" - 5 ¾" HEIGHT

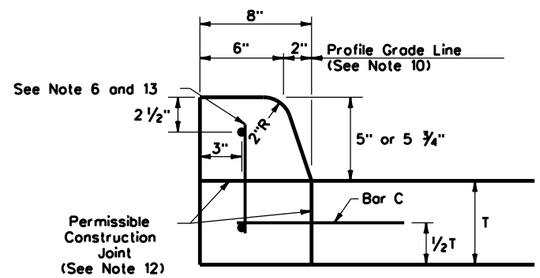

TYPE II CURB
5" - 5 ¾" HEIGHT

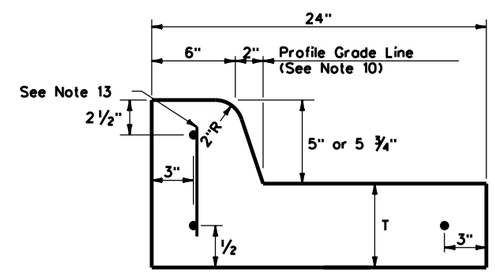

TYPE II CURB AND GUTTER
5" - 5 ¾" HEIGHT

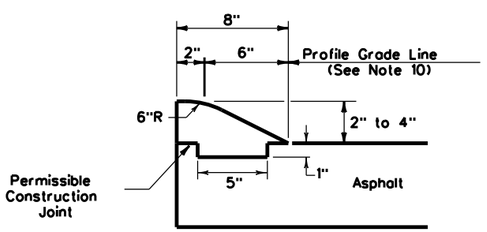

TYPE III CURB (KEYED)
2" - 4" HEIGHT

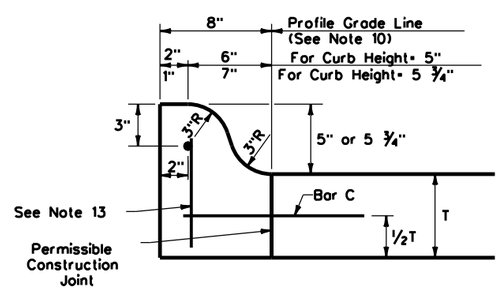

TYPE IIa CURB
5" - 5 ¾" HEIGHT

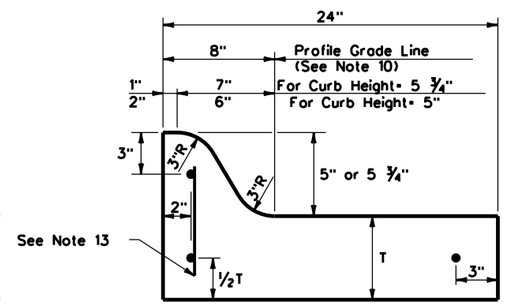

TYPE IIa CURB AND GUTTER
5" - 5 ¾" HEIGHT

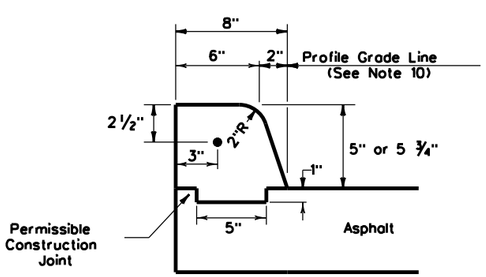

TYPE IV CURB (KEYED)
5" - 5 ¾" HEIGHT

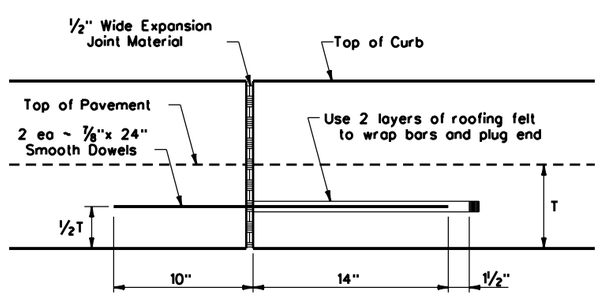

EXPANSION JOINT DETAIL

CURB TRANSITION NOTE:
Field conditions may require a longer or shorter transition, and shall be shown elsewhere in the plans, or as directed by the Engineer.

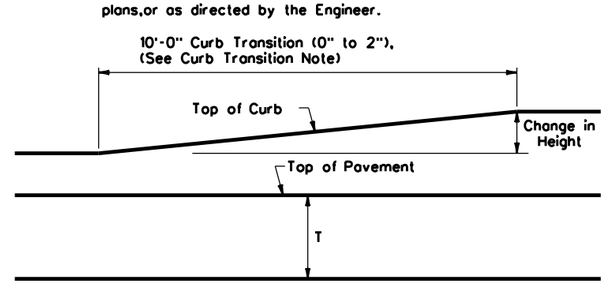

CURB TRANSITION
Note: To be paid for as Highest Curb

GENERAL NOTES

1. All materials and construction shall be in accordance with Item 529, "Concrete Curb, Gutter, and Combined Curb and Gutter."
2. Concrete shall be Class A.
3. When reinforcing bars are used, they shall be No.4 unless otherwise shown. The use of fiber reinforced concrete in lieu of reinforcing steel is acceptable. Use fibers meeting the requirements of DMS 4550, "Fibers for Concrete," and dose fibers in accordance with Material Producers List (MPL) "Fibers for Class A and B Concrete Applications."
4. Round exposed sharp edges with a rounding tool, to a minimum radius of ¼ inch.
5. All existing curbs and driveways to be removed shall be sawed or removed at existing joints.
6. Where concrete curb is to be placed on existing concrete pavement, Bar B may be drilled and grouted in place, or may be inserted into fresh concrete.
7. Expansion and contraction joints shall be constructed to match pavement joints in all curbs and curb and gutter adjacent to jointed concrete pavement. Where placement of curb or curb and gutter is not adjacent to concrete pavement, expansion joints shall be provided at structures, curb returns at streets, and at locations directed by The Engineer.
8. Vertical and horizontal dowel bars and transverse reinforcing bars shall be placed at four feet C~C.
9. Dimension 'T' shown is the thickness of concrete pavement. When curb is installed adjacent to flexible pavement dimension 'T' is 8" maximum.
10. Usual profile grade line. Refer to typical sections and plan-profile sheets for exact locations.
11. One-half inch expansion joint material shall be provided where curb or curb and gutter is adjacent to sidewalk or riprap.
12. When horizontal permissible construction joints are used, the longitudinal pavement steel shall be placed in accordance with pavement details shown elsewhere in the plans. Reinforcing steel for curb section shall then conform to that required for concrete curb.
13. Bar B placement as needed (typically at four ft. C-C) to support curb reinforcing steel during concrete placement.

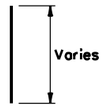

BAR B

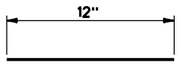

BAR C

Texas Department of Transportation

Design Division Standard

CONCRETE CURB AND CURB AND GUTTER

CCCG-22

FILE: cccg21.dgn	DN: TXDOT	CK: AN	DW: CS	CK: KM	
© TxDOT: JUNE 2022	CONT	SECT	JOB	HIGHWAY	
REVISIONS					
	DIST	COUNTY		SHEET NO.	
				77A	

DATE:
FILE:

DISCLAIMER:
The use of this standard is governed by the "Texas Engineering Practice Act". No warranty of any kind is made by TxDOT for any purpose whatsoever. TxDOT assumes no responsibility for the conversion of this standard to other formats or for incorrect results or damages resulting from its use.

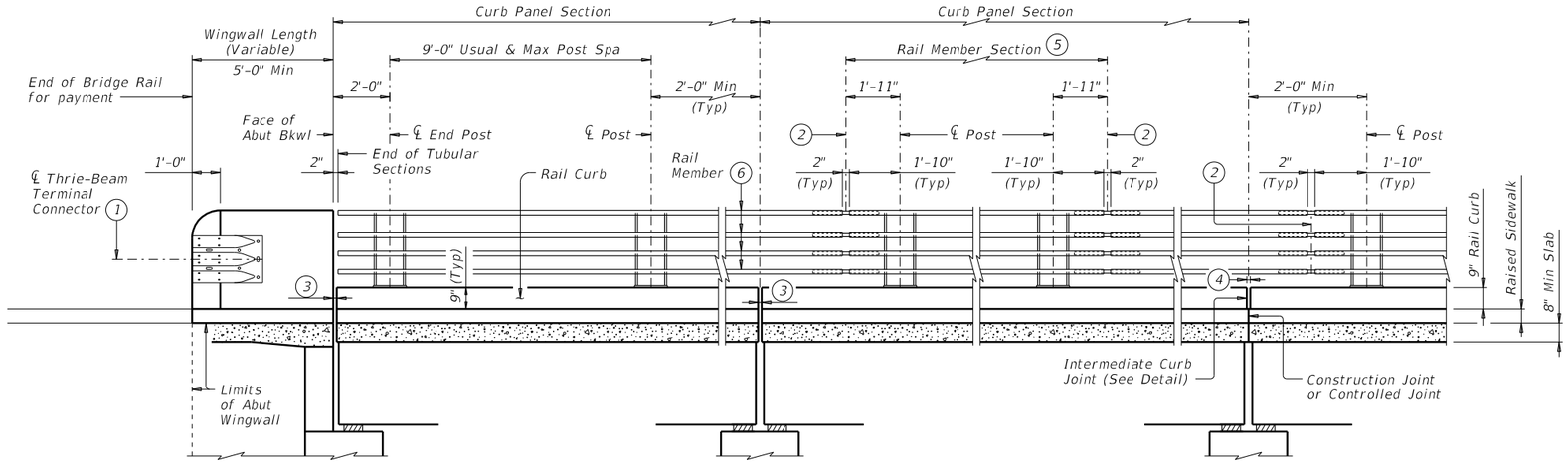

AT ABUTMENTS

AT BENTS WITH SLAB EXP JOINTS

AT BENTS WITHOUT SLAB EXP JOINTS

ROADWAY ELEVATION OF RAIL

Showing combination rail on a raised sidewalk.

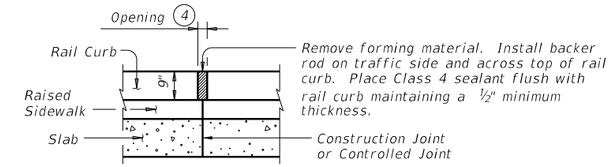

INTERMEDIATE CURB JOINT DETAIL

Provide at all interior bents without slab expansion joints.

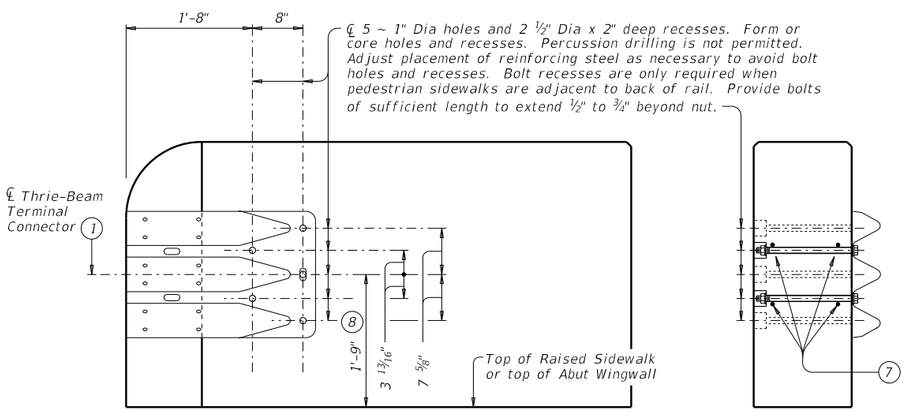

ELEVATION

SECTION

TERMINAL CONNECTION DETAILS

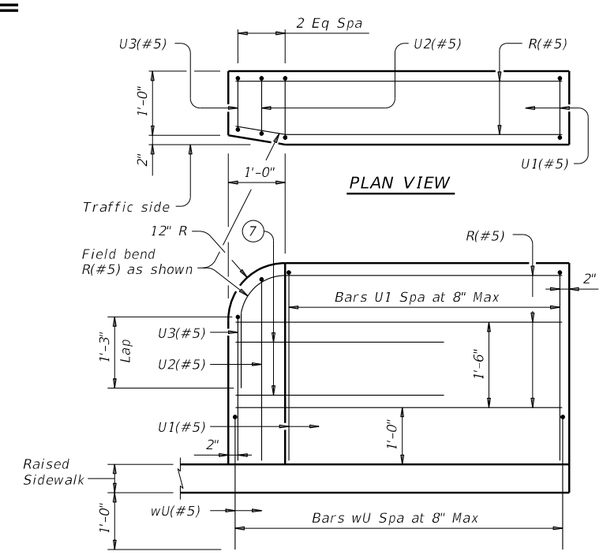

PLAN VIEW

AT ABUTMENT WINGWALL

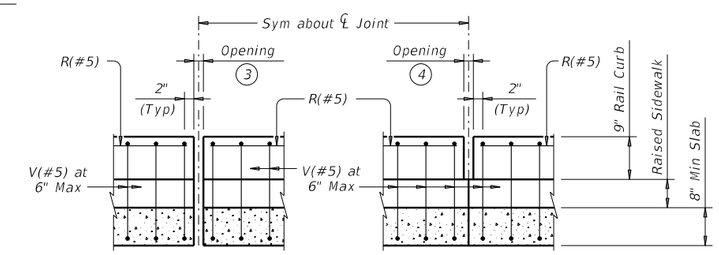

AT BENTS WITH SLAB EXPANSION JOINTS

AT BENTS WITHOUT SLAB EXP JOINTS

ELEVATION SHOWING TYPICAL REINFORCING PLACEMENT

Showing with raised sidewalk

1. Terminal Connectors and associated hardware are to be paid for under the Item "Metal Beam Guard Fence." Attach Metal Beam Guard Fence Transitions to the bridge rail and extend along the embankment unless otherwise shown in the plans.
2. ℄ Expansion Joint or Splice Joint as required.
3. Same as slab joint opening. (5" Max Expansion Joint).
4. ¼" Min, ¾" Max.
5. Rail member sections must have at least two posts but not more than four.
6. HSS 6 x 2 x ¼ (ASTM-A1085 or A500 Grade B).
7. Place 4 additional Bars R(#5) 3'-8" in length inside Bars U(#5) and centered 2'-0" from end of rail when Terminal Connections are required. Field bend as needed.
8. Increase 2" for structures with Overlay.

SHEET 1 OF 4

Texas Department of Transportation — Bridge Division Standard

COMBINATION RAIL

TYPE C1W

FILE: RL-C1W-19.dgn	DN: TxDOT	CK: TxDOT	DW: JTR	CK: JMH
©TxDOT September 2019	CONT	SECT	JOB	HIGHWAY
REVISIONS	0922	33	076	CS
	DIST		COUNTY	SHEET NO.
	LRD		WEBB	78

DATE:
FILE:

DISCLAIMER:
The use of this standard is governed by the "Texas Engineering Practice Act". No warranty of any kind is made by TxDOT for any purpose whatsoever.
TxDOT assumes no responsibility for the conversion of this standard to other formats or for incorrect results or damages resulting from its use.

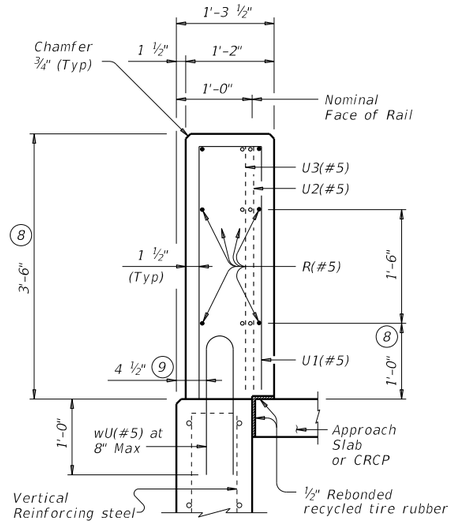

ON ABUTMENT WINGWALLS OR CIP RETAINING WALLS

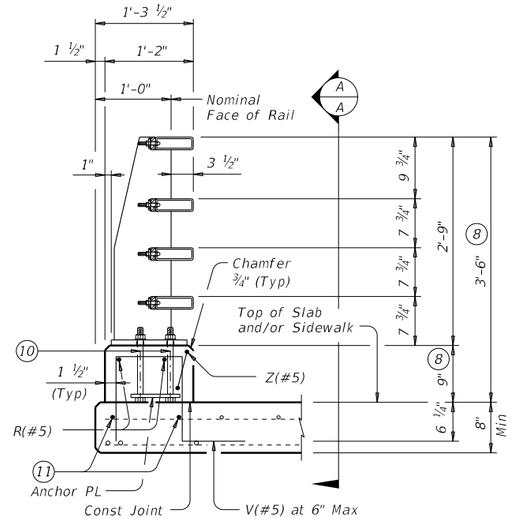

ON BRIDGE SLAB

SECTIONS THRU RAIL WITHOUT RAISED SIDEWALK

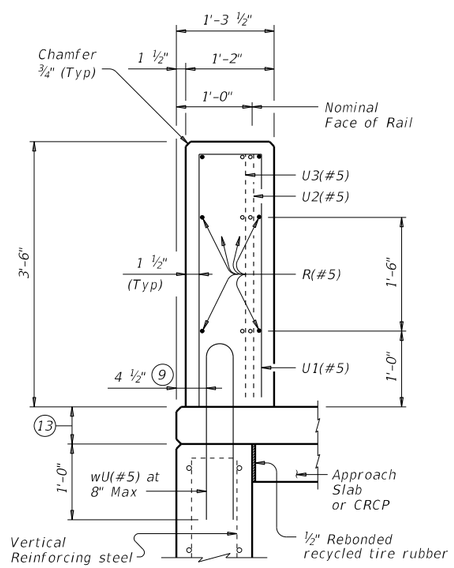

ON ABUTMENT WINGWALLS OR CIP RETAINING WALLS

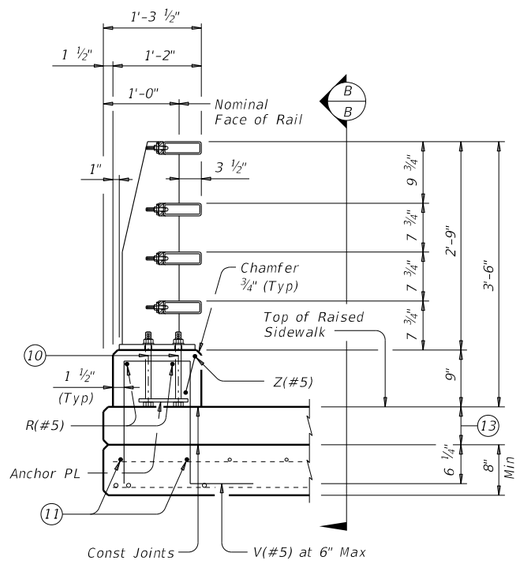

ON BRIDGE SLAB

SECTIONS THRU RAIL WITH RAISED SIDEWALK

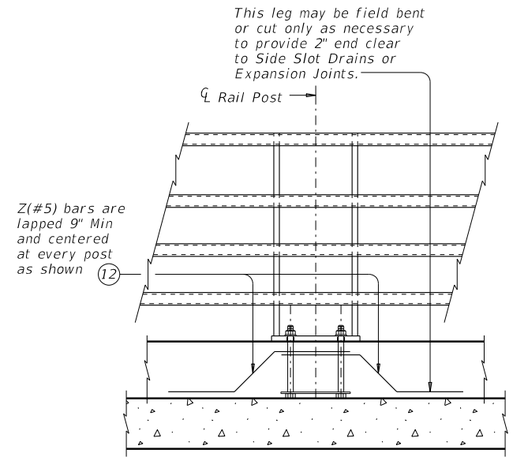

VIEW A-A

Bars V and R omitted for clarity.
Showing without raised sidewalk.

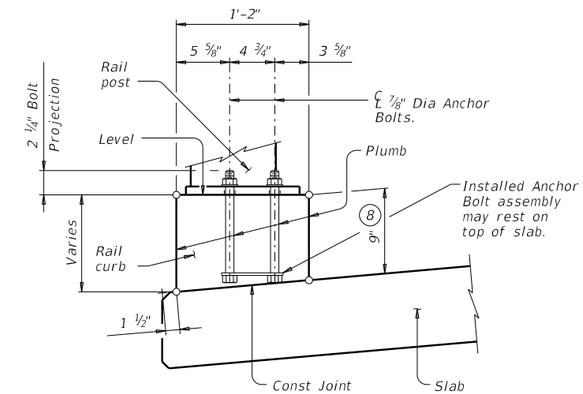

WITHOUT RAISED SIDEWALK

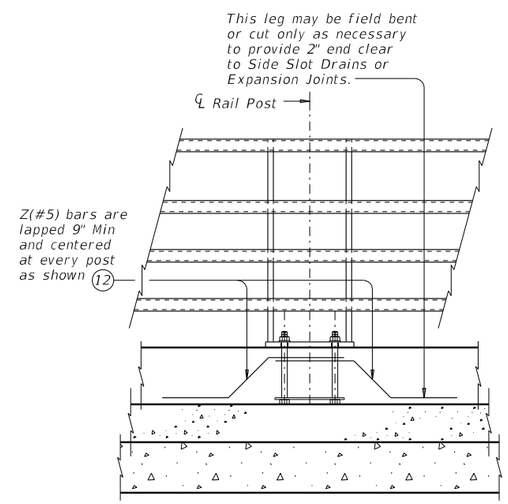

VIEW B-B

Bars V and R omitted for clarity.
Showing with raised sidewalk.

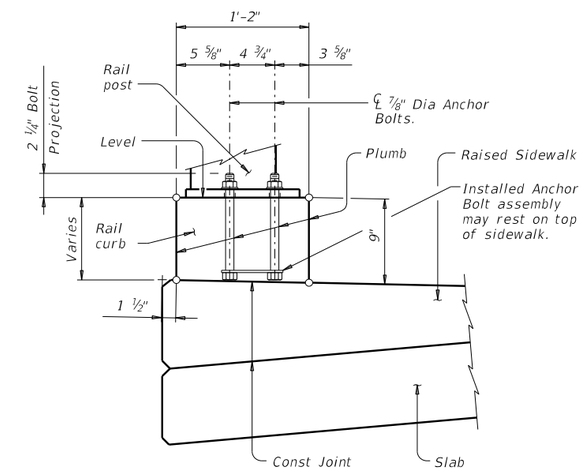

WITH RAISED SIDEWALK

RAIL CURB FORMING DETAIL

Reinforcing steel and rail curb chamfers not shown for clarity.

(8) Increase 2" for structures with Overlay.

(9) 5 ¼" when vertical reinforcing has closer clear cover over horizontal reinforcing in abutment wingwalls or retaining walls on traffic side of wall.

(10) ℄ ⅞" Dia Anchor Bolts. See "Anchor Bolt Assembly Details."

(11) Top longitudinal slab bar may be adjusted laterally 3" plus or minus to tie reinforcing.

(12) Adjust Bars Z(#5) as necessary to avoid Bars V(#5).

(13) Raised Sidewalk.

Texas Department of Transportation — Bridge Division Standard

COMBINATION RAIL

TYPE C1W

FILE: RL-C1W-19.dgn	ON: TxDOT	CK: TxDOT	DW: JTR	CK: JMH
©TxDOT September 2019	CONT	SECT	JOB	HIGHWAY
REVISIONS	0922	33	076	CS
	DIST		COUNTY	SHEET NO.
	LRD		WEBB	79

DATE:
FILE:

DISCLAIMER:
The use of this standard is governed by the "Texas Engineering Practice Act". No warranty of any kind is made by TxDOT for any purpose whatsoever. TxDOT assumes no responsibility for the conversion of this standard to other formats or for incorrect results or damages resulting from its use.

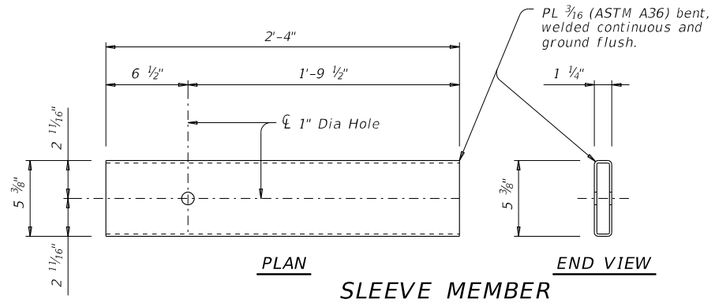

SLEEVE MEMBER

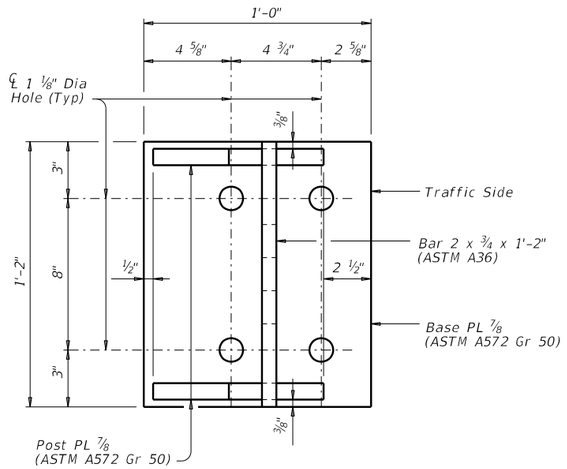

VIEW C-C

(Showing Hole location in Base PL)

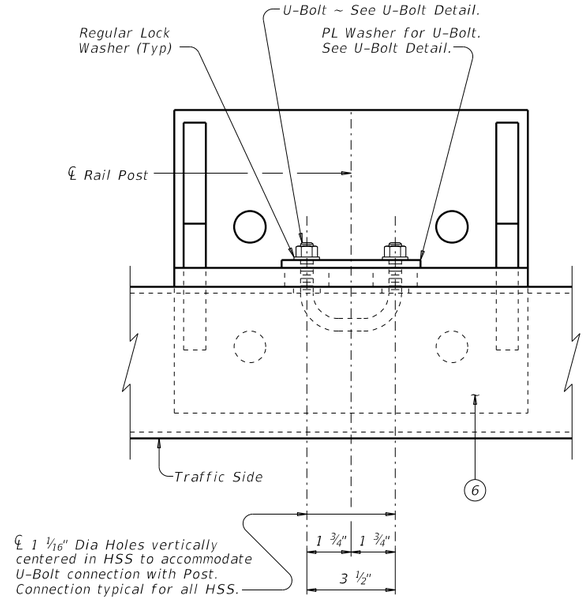

TOP VIEW OF RAIL POST

(Showing connection for rail post and HSS.)

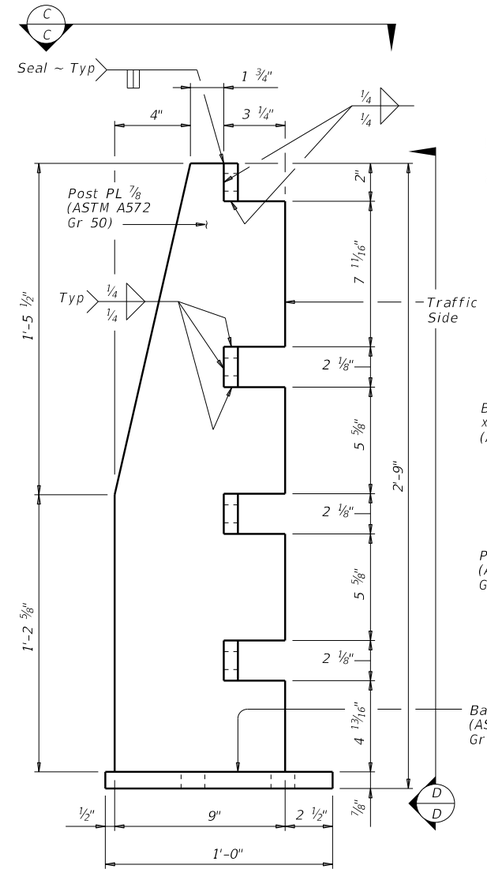

POST DETAIL

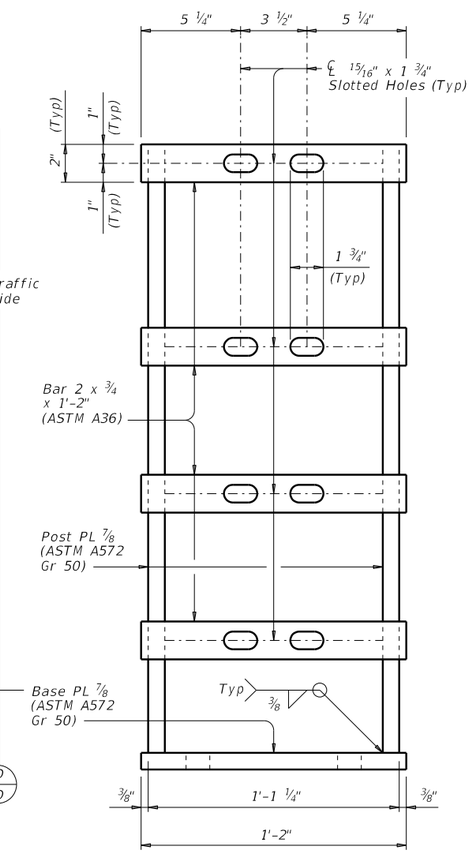

VIEW D-D

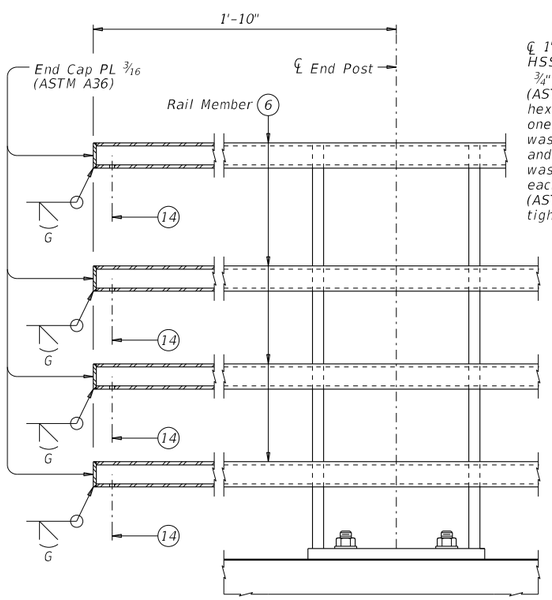

END CAPS ON HSS AT END POST

℄ 1" Dia holes in HSS centered for ¾" Dia x 3 ½" (ASTM F3125 Gr A325) hex head bolts with one hardened steel washer (ASTM F436) and one regular lock washer placed under each heavy hex nut (ASTM A563). Wrench tight, do not crush rail.

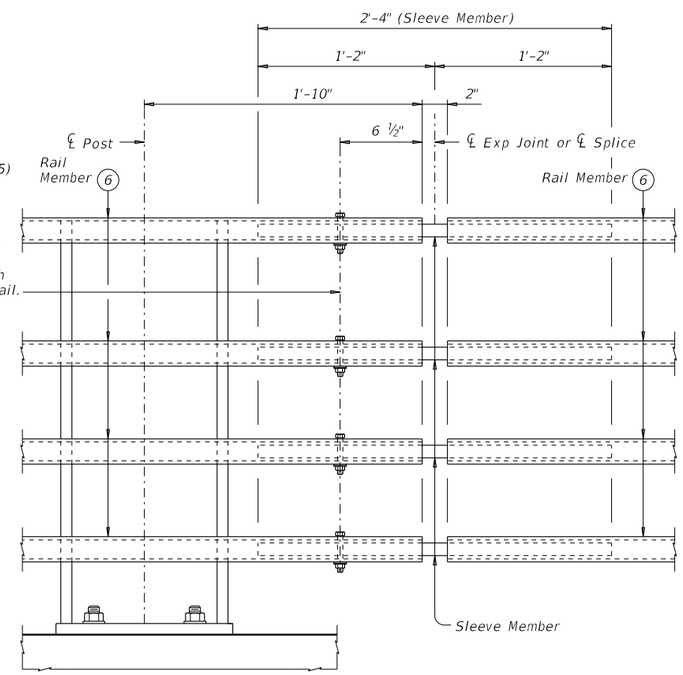

EXPANSION JOINT OR SPLICE

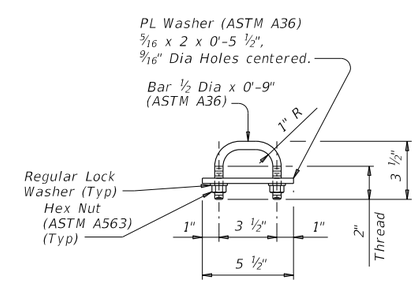

U-BOLT DETAIL

(Showing U-Bolt for rail post and HSS.)

(6) HSS 6 x 2 x ¼ (ASTM A1085 or A500 Grade B).

(14) ℄ ⅜" Dia Drain Hole in bottom of HSS.

SHEET 3 OF 4

Texas Department of Transportation — Bridge Division Standard

COMBINATION RAIL

TYPE C1W

FILE: RL-C1W-19.dgn	ON: TxDOT	CK: TxDOT	DW: JTR	CK: JMH
©TxDOT September 2019	CONT	SECT	JOB	HIGHWAY
REVISIONS	0922	33	076	CS
	DIST		COUNTY	SHEET NO.
	LRD		WEBB	80

DATE:
FILE:

DISCLAIMER:
The use of this standard is governed by the "Texas Engineering Practice Act". No warranty of any kind is made by TxDOT for any purpose whatsoever. TxDOT assumes no responsibility for the conversion of this standard to other formats or for incorrect results or damages resulting from its use.

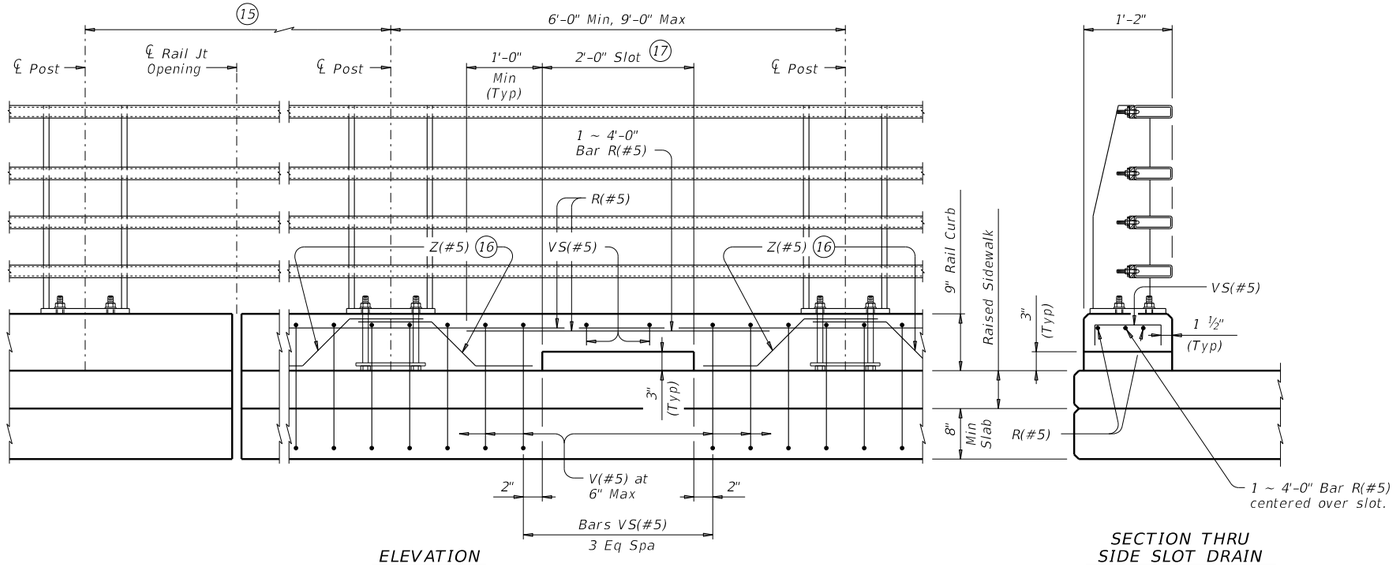

ELEVATION

SECTION THRU SIDE SLOT DRAIN

OPTIONAL SIDE SLOT DRAIN DETAILS 18

Showing side slot drain on raised sidewalk, without raised sidewalk similar.

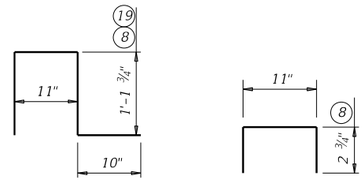

BARS V(#5)

BARS VS(#5)

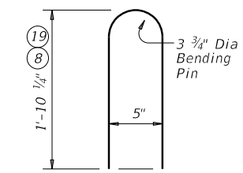

BARS wU(#5)

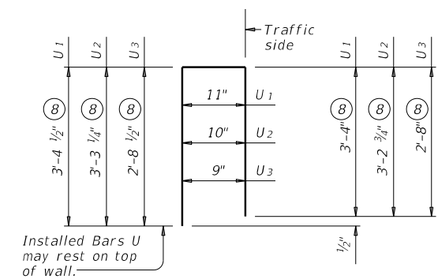

BARS U(#5)

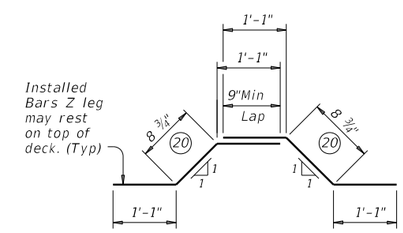

BARS Z(#5)

CONSTRUCTION NOTES:

The face of tubular sections and rail curb must be plumb unless otherwise approved by the Engineer. Steel posts must be square to the top of curb. Use Type VIII epoxy mortar under post base plates if gaps larger than 1/16" exist.

Bend tubes to required radius for curved rails. Shop drawings for approval are required for curved rails.

One shop splice per rail member section is permitted with minimum 85 percent penetration. The weld may be square groove or single V groove. Grind smooth.

Round or chamfer exposed edges of rail members and rail posts must be rounded or chamfered to approximately 1/16" by grinding.

Chamfer all exposed concrete corners.

MATERIAL NOTES:

Provide ASTM A1085 or A500 Gr B for all HSS.

Provide Grade 60 reinforcing steel.

Epoxy coat or galvanize all reinforcing steel if slab bars are epoxy coated or galvanized.

Galvanize all metal components of steel rail system. Apply additional coatings when shown elsewhere on the plans. When plans require paint over galvanizing, follow the requirements for painting galvanized steel in Item 445, "Galvanizing" and when field painting, Item 446, "Field Cleaning and Painting Steel." Sleeve members and anchor bolts must receive galvanization prior to installation and only field paint after installation unless directed otherwise by Engineer.

Provide 7/8" Dia ASTM F3125 Gr A325 or A449 bolts (or ASTM A193 Gr B7 or F1554 Gr 105 threaded rods with one tack welded heavy hex nut each) with one hardened steel washer (ASTM F436) placed under each heavy hex nut that conforms to ASTM A563 requirements.

Provide ½" Dia round bar U-bolts (ASTM A36) with plate washer (ASTM A36) and regular lock washers placed under hex nuts that conform to ASTM A563 requirements. See "U-Bolt Detail."

Provide Class "S" concrete. When Class "S" concrete for slab is HPC, include a minimum of 3 gallons of calcium nitrite inorganic corrosion inhibitor per cubic yard of Class "S" concrete.

Provide bar laps, where required, as follows:

Uncoated or galvanized ~ #5 = 2'-0"
Epoxy coated ~ #5 = 3'-0"

GENERAL NOTES:

This rail has been successfully evaluated by full-scale crash test to meet MASH TL-4 criteria. This rail can be used for speeds of 50 mph and greater when a TL-3 rated guard fence transition is used. When a TL-2 rated guard fence transition is used, this rail can only be used for speeds of 45 mph and less.

This railing cannot be used on bridges with expansion joints providing more than 5" movement or on cast-in-place retaining walls, unless otherwise noted.

Rail anchorage details shown on this standard may require modification for select structure types. See appropriate details elsewhere in plans for these modifications.

Submit erection drawings showing panel lengths, rail post spacing, and anchor bolt setting, to the Engineer for approval.

Average weight of railing with no overlay:

205 plf total
131 plf (Conc)
74 plf (Steel).

Cover dimensions are clear dimensions, unless noted otherwise. Reinforcing bar dimensions shown are out-to-out of bar.

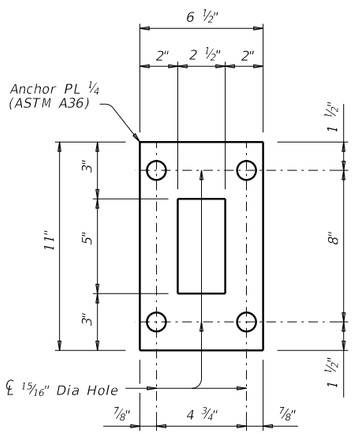

PLAN OF ANCHOR PLATE

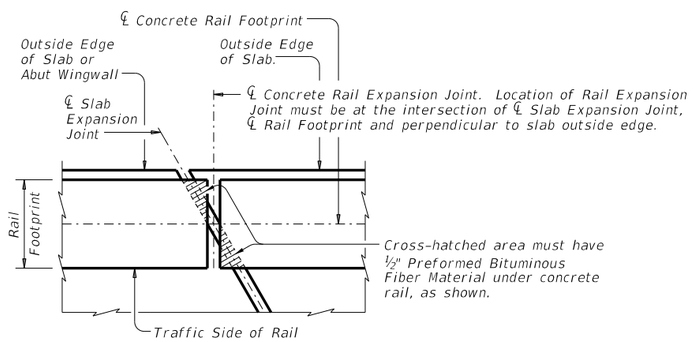

PLAN OF RAIL AT EXPANSION JOINTS

Example showing Slab Expansion Joints without breakbacks.

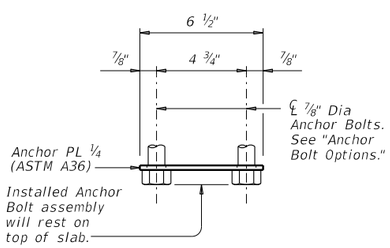

ELEVATION

ANCHOR BOLT ASSEMBLY DETAILS

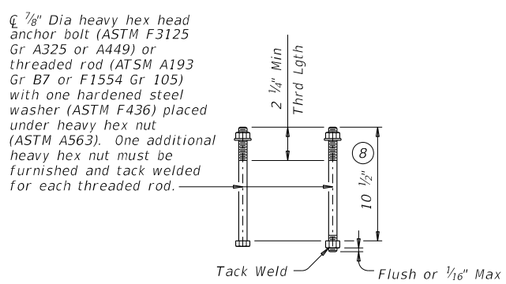

ANCHOR BOLT OPTIONS

(Showing Anchor Bolts for Base Plate)

8 Increase 2" for structures with Overlay.

15 Side slot drains are not allowed in areas where there is a joint in the concrete curb between rail posts.

16 Bars Z(#5). See "Section Thru Rail" and "View A-A or B-B" for Bar Z placement and spacing.

17 Center side slot drain between posts within the limits shown.

18 Side slot drains may be used where shown elsewhere on the plans or as directed by the Engineer. Do not place drains over railroad tracks, lower roadways, or sidewalks. When this rail is used as a separator between a roadway and a sidewalk, side slot drains are not permitted.

19 For raised sidewalks, add sidewalk height to total bar height. Use sidewalk height at rail's location.

20 Increase 2 ¾" for structures with Overlay.

Texas Department of Transportation — Bridge Division Standard

COMBINATION RAIL

TYPE C1W

FILE: RL-C1W-19.dgn	DN: TxDOT	CK: TxDOT	DW: JTR	CK: JMH	
©TxDOT September 2019	CONT	SECT	JOB	HIGHWAY	
REVISIONS	0922	33	076	CS	
	DIST		COUNTY		SHEET NO.
	LRD		WEBB		81

DATE:
FILE:

DISCLAIMER:
The use of this standard is governed by the "Texas Engineering Practice Act". No warranty of any kind is made by TxDOT for any purpose whatsoever. TxDOT assumes no responsibility for the conversion of this standard to other formats or for incorrect results or damages resulting from its use.

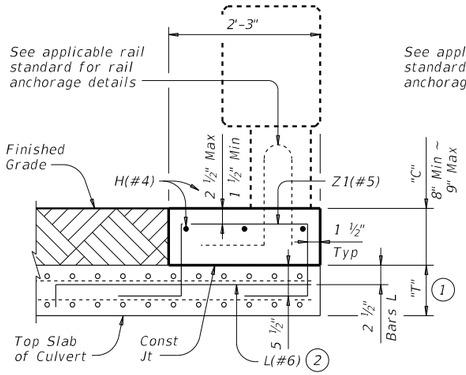

SECTION A-A

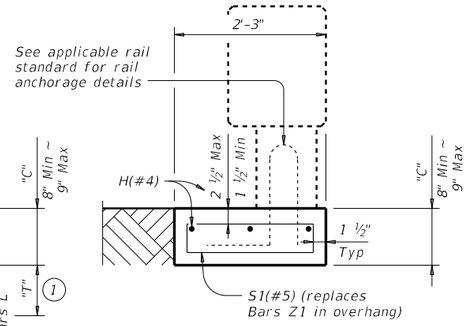

SECTION B-B

TYPE 1 CURB

Used for curbs from 8" to 9" (Showing "C" = 9"). Showing T223 Rail, other rails similar. (Bars L(#5) on T223 and C223 Rails are not used for this structure). Bars RH(#5) required on standards T80HT, T80SS and T224 are not required when used with the RAC standard.

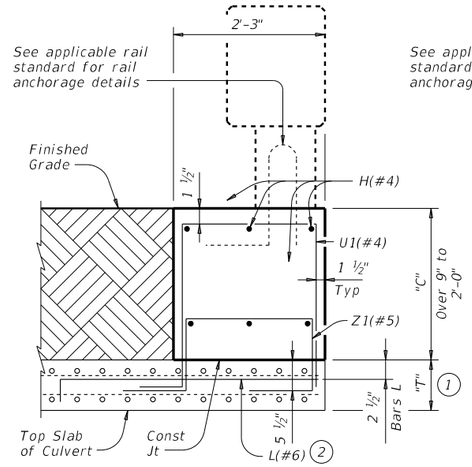

SECTION A-A

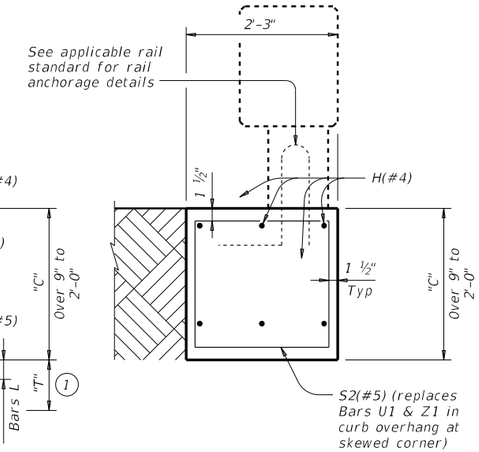

SECTION B-B

TYPE 2 CURB

Used for curbs over 9" to 2'-0" (Showing "C" = 2'-0"). Showing T223 Rail, other rails similar. (Bars L(#5) on T223 and C223 Rails are not used for this structure). Bars RH(#5) required on standards T80HT, T80SS and T224 are not required when used with the RAC standard.

TABLE OF REINFORCING SPACING		
Curb Height "C"	Section Type	Bars S, U, & Z Spa
8" to 9"	1	12"
Over 9" to 2'-0"	2	9"
Over 2'-0" to 3'-0"	3	7"
Over 3'-0" to 5'-0"	3	5"

TABLE OF ESTIMATED QUANTITIES (4)			
Curb Height "C"	Section Type	Reinf Steel (Lb/LF)	Class "C" Concrete (CY/LF)
8"	1	21.5	0.056
9"	1	21.5	0.063
1'-0"	2	29.7	0.083
1'-6"	2	30.6	0.125
2'-0"	2	31.5	0.167
3'-0"	3	44.6	0.250
4'-0"	3	56.8	0.333
5'-0"	3	60.0	0.417

(1) "T" is equal to the culvert top slab thickness. For Precast Boxes with slabs less than 8" thick, see SCP-MD Standard for additional details.

(2) Tilt Bars L hook as necessary to maintain cover.

(3) Optional Bars L are to be used only for Precast Box Culverts with 3'-0" closure pours.

(4) Quantities shown are for Contractor's information only. Quantities are per Linear Foot of curb length. The values for each section type in table can be interpolated for intermediate values of Curb Height, "C".

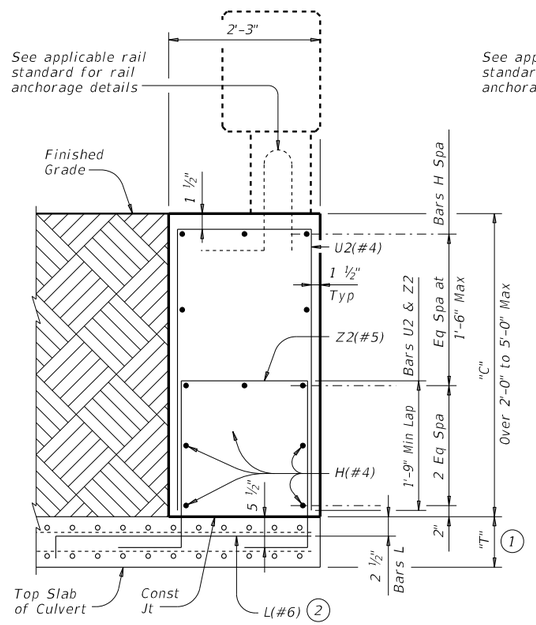

SECTION A-A

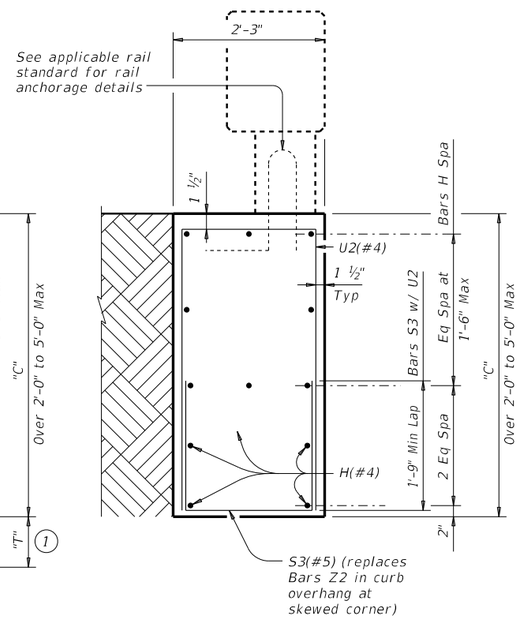

SECTION B-B

TYPE 3 CURB

Used for curbs over 2'-0" to 5'-0" (Showing "C" = 4'-0"). Showing T223 Rail, other rails similar. (Bars L(#5) on T223 and C223 Rails are not used for this structure). Bars RH(#5) required on standards T80HT, T80SS and T224 are not required when used with the RAC standard.

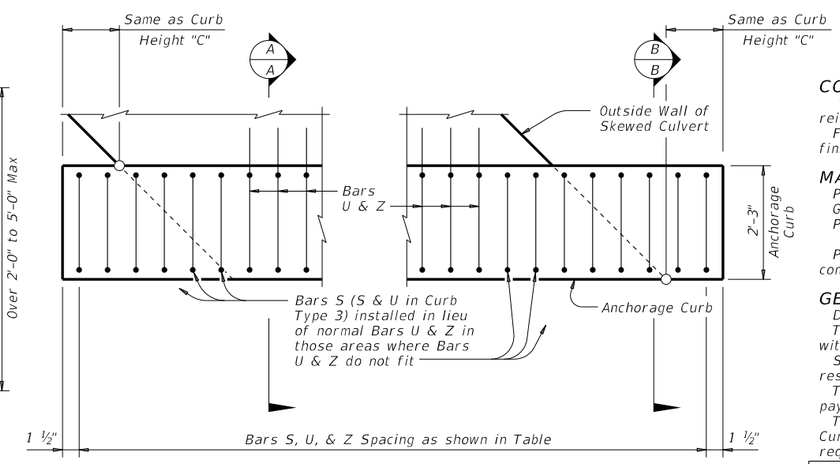

TYPICAL CURB PLAN

Showing typical installation on skewed culvert. (Bars L(#5) on T223 and C223 Rails are not used for this structure). Bars RH(#5) required on standards T80HT, T80SS and T224 are not required when used with the RAC standard.

CONSTRUCTION NOTES:

When using this anchorage curb, omit normal culvert curb reinforcing bars K and H shown on the culvert standard sheets.

For vehicle safety, the top of the curb must be flush with the finished grade.

MATERIAL NOTES:

Provide Grade 60 reinforcing steel.

Galvanize all reinforcing steel if required elsewhere.

Provide bar laps, where required, as follows:
Uncoated or galvanized ~ #4 = 1'-11"

Provide Class "C" concrete (f'c=3,600 psi). Provide Class "C" (HPC) concrete if shown elsewhere in the plans.

GENERAL NOTES:

Designed according to AASHTO LRFD Bridge Design Specifications.

The rail anchorage curb details have sufficient strength for use with all standard rail types.

See appropriate rail standard for approved design speed restrictions, notes and details not shown.

This anchorage curb is considered part of the Box Culvert for payment.

These details are for use with curbs that are 8" to 5'-0" tall only. Curb heights that are less than or greater than those shown will require special design.

Cover dimensions are clear dimensions, unless noted otherwise.
Reinforcing bar dimensions shown are out-to-out of bar.

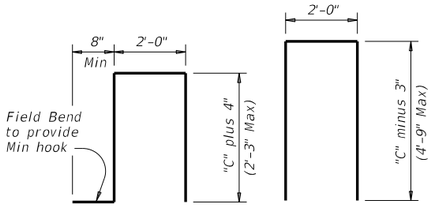

BARS U1 (#4)

BARS U2 (#4)

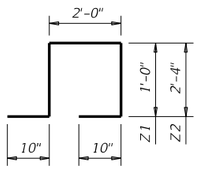

BARS Z (#5)

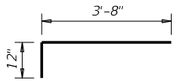

BARS L (#6) (2)
Spaced at 6" Max

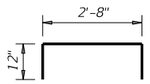

OPTIONAL BARS L (#6) (3) (2)
Spaced at 6" Max

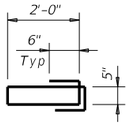

BARS S1 (#5)

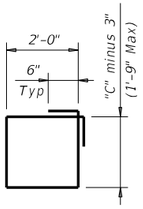

BARS S2 (#5)

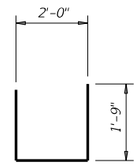

BARS S3 (#5)

SHEET 1 OF 2

Texas Department of Transportation — Bridge Division Standard

RAIL ANCHORAGE CURB
BOX CULVERT
RAIL MOUNTING DETAILS
(CURBS 8" TO 5'-0" TALL ONLY)

RAC

FILE: CD-RAC-20.dgn	DN: GAF	CK: TxDOT	DW: TxDOT	CK: GAF
©TxDOT February 2020	CONT	SECT	JOB	HIGHWAY
REVISIONS	0922	33	076	CS
	DIST		COUNTY	SHEET NO.
	LRD		WEBB	82

DATE:
FILE:

DISCLAIMER:
The use of this standard is governed by the "Texas Engineering Practice Act". No warranty of any kind is made by TxDOT for any purpose whatsoever. TxDOT assumes no responsibility for the conversion of this standard to other formats or for incorrect results or damages resulting from its use.

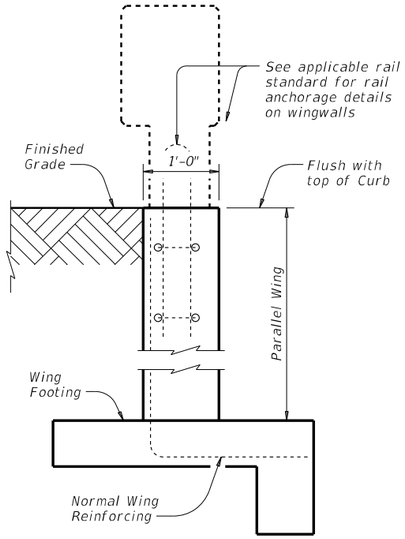

SECTION C-C

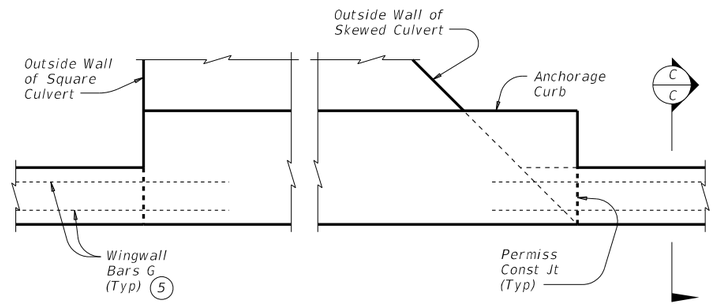

TYPICAL CURB PLAN

Curb reinforcing and footings not shown for clarity

INSTALLATION AT PARALLEL CULVERT WINGWALLS

See culvert wingwall standard for bars and details not shown.

5 Bars G (#5), as identified on the PARALLEL WINGS PW standard sheet, must extend 1'-6" into the Anchorage Curb similar to that shown for a normal culvert curb.

SHEET 2 OF 2

Texas Department of Transportation

Bridge Division Standard

RAIL ANCHORAGE CURB
BOX CULVERT
RAIL MOUNTING DETAILS
(CURBS 8" TO 5'-0" TALL ONLY)

RAC

FILE: CD-RAC-20.dgn	DN: GAF	CK: TxDOT	DW: TxDOT	CK: GAF	
©TxDOT February 2020	CONT	SECT	JOB	HIGHWAY	
REVISIONS	0922	33	076	CS	
	DIST		COUNTY		SHEET NO.
	LRD		WEBB		83

DATE:
FILE:

DISCLAIMER:
The use of this standard is governed by the "Texas Engineering Practice Act". No warranty of any kind is made by TxDOT for any purpose whatsoever. TxDOT assumes no responsibility for the conversion of this standard to other formats or for incorrect results or damages resulting from its use.

TYPE 1

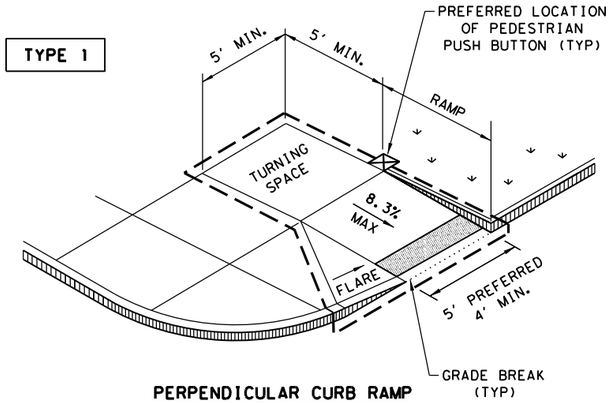

PERPENDICULAR CURB RAMP

TYPE 2

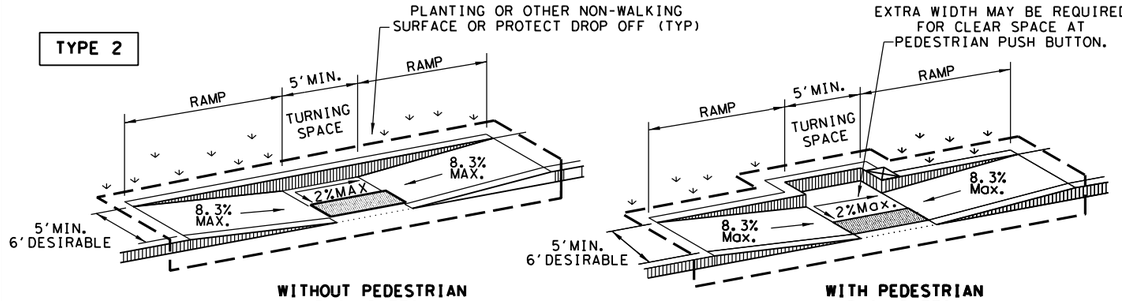

WITHOUT PEDESTRIAN PUSH BUTTON

WITH PEDESTRIAN PUSH BUTTON

PARALLEL CURB RAMP

TYPE 3

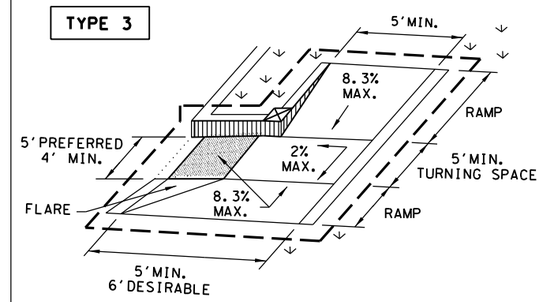

TYPE 6

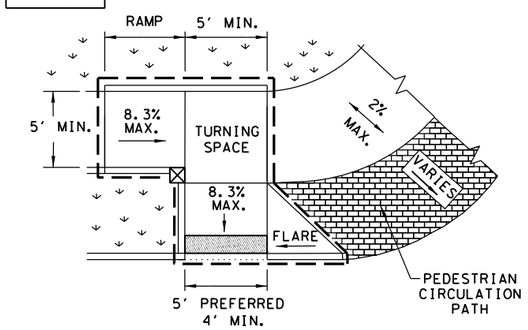

COMBINATION CURB RAMPS

TYPE 20

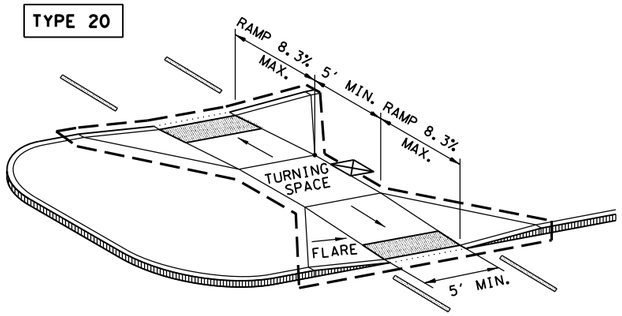

CURB RAMPS AT MEDIAN ISLANDS

TYPE 7

(SIDEWALK SET BACK FROM CURB)

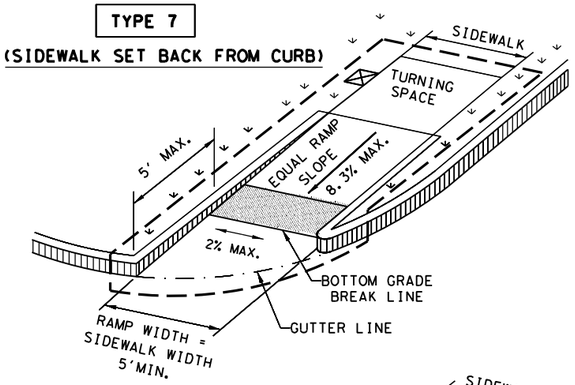

CROSS SLOPE NOT TO EXCEED 2% ON ANY PORTION OF RAMP, TURNING SPACE OR TRANSITION TO STREET.

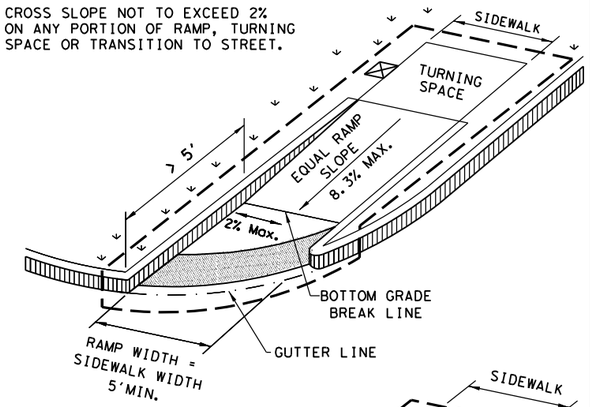

TYPE 10

(SIDEWALK ADJACENT TO CURB)

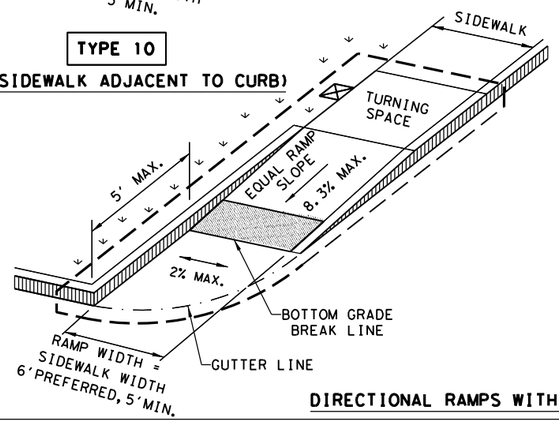

CROSS SLOPE NOT TO EXCEED 2% ON ANY PORTION OF RAMP, TURNING SPACE OR TRANSITION TO STREET.

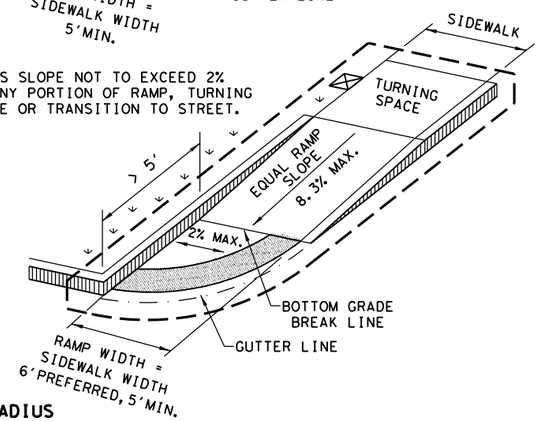

DIRECTIONAL RAMPS WITHIN RADIUS

TYPE 5

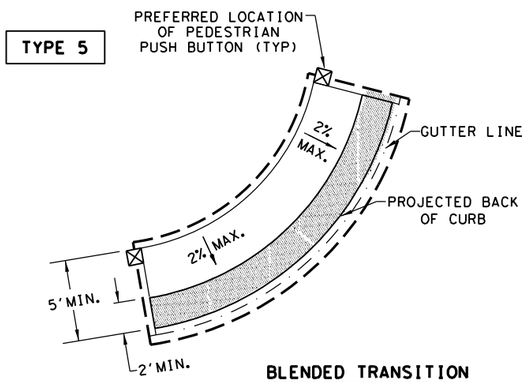

BLENDED TRANSITION
(FLUSH LANDING)

TYPE 21

INSTALL DETECTABLE WARNING SURFACE AT EACH END OF THE CUT-THROUGH RAMP WITH A MINIMUM 2' USUAL SIDEWALK SURFACE BETWEEN. IF MEDIAN IS LESS THAN 6' WIDE, ELIMINATE DETECTABLE WARNING SURFACES.

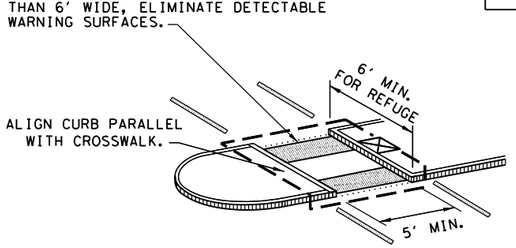

NOTE: CURB DETAILS ARE SHOWN ELSEWHERE IN THE PLANS.

TYPE 22

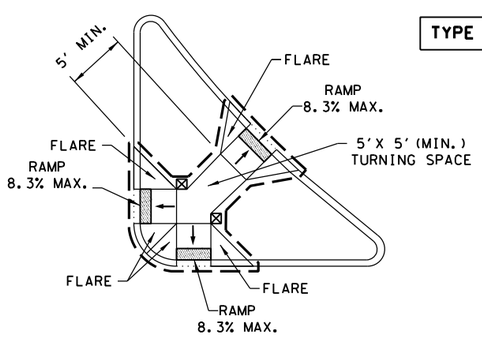

COMBINATION ISLAND RAMPS

BOTTOM GRADE BREAK OF CURB RAMP WILL NORMALLY BE AT GUTTER LINE. SURFACE SLOPES AT GRADE BREAKS SHALL BE FLUSH.

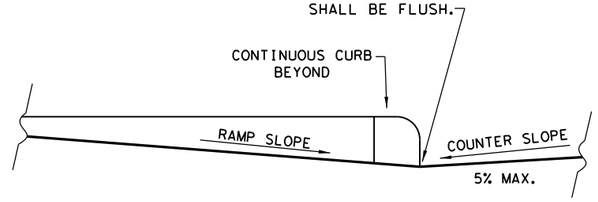

TYPICAL SECTION OF PERPENDICULAR CURB RAMP AT CONNECTION TO ROADWAY

NOTES / LEGEND:

SEE GENERAL NOTES ON SHEET 2 OF 4 FOR MORE INFORMATION.

DENOTES PLANTING OR NON-WALKING SURFACE NOT PART OF PEDESTRIAN CIRCULATION PATH.

GUTTER LINE

DETECTABLE WARNING SURFACE

GRADE BREAK

DENOTES PREFERRED LOCATION OF PEDESTRIAN PUSH BUTTON IF APPLICABLE.

RAMP LIMITS OF PAYMENT

SHEET 1 OF 4

Texas Department of Transportation — Design Division Standard

PEDESTRIAN FACILITIES CURB RAMPS

PED-18

FILE: ped18	DN: TxDOT	CK: VP	DW: KM	CK: PK & JG
© TxDOT: MARCH, 2002	CONT	SECT	JOB	HIGHWAY
REVISIONS	0922	33	076	CS
REVISED 08,2005 REVISED 06,2012 REVISED 01,2018	DIST	COUNTY		SHEET NO.
	LRD	WEBB		84

DATE:
FILE:

DISCLAIMER:
The use of this standard is governed by the "Texas Engineering Practice Act". No warranty of any kind is made by TxDOT for any purpose whatsoever. TxDOT assumes no responsibility for the conversion of this standard to other formats or for incorrect results or damages resulting from its use.

GENERAL NOTES

CURB RAMPS

1. Install a curb ramp or blended transition at each pedestrian street crossing.
2. All slopes shown are maximum allowable. Cross slopes of 1.5% and lesser running should be used. Adjust curb ramp length or grade of approach sidewalks as directed.
3. Maximum allowable cross slope on sidewalk and curb ramp surfaces is 2%.
4. The minimum sidewalk width is 5'. Where the sidewalk is adjacent to the back of curb, a 6' sidewalk width is desirable. Where a 5' sidewalk cannot be provided due to site constraints, sidewalk width may be reduced to 4' for short distances. 5'x 5' passing areas at intervals not to exceed 200' are required.
5. Turning Spaces shall be 5'x 5' minimum. Cross slope shall be maximum 2%.
6. Clear space at the bottom of curb ramps shall be a minimum of 4'x 4' wholly contained within the crosswalk and wholly outside the parallel vehicular travel path.
7. Provide flared sides where the pedestrian circulation path crosses the curb ramp. Flared sides shall be sloped at 10% maximum, measured parallel to the curb. Returned curbs may be used only where pedestrians would not normally walk across the ramp, either because the adjacent surface is planted, substantially obstructed, or otherwise protected.
8. Additional information on curb ramp location, design, light reflective value and texture may be found in the latest draft of the Proposed Guidelines for Pedestrian Facilities in the Public Right of Way (PROWAG) as published by the U.S. Architectural and Transportation Barriers Compliance Board (Access Board).
9. To serve as a pedestrian refuge area, the median should be a minimum of 6' wide, measured from back of curbs. Medians should be designed to provide accessible passage over or through them.
10. Small channelization islands, which do not provide a minimum 5'x 5' landing at the top of curb ramps, shall be cut through level with the surface of the street.
11. Crosswalk dimensions, crosswalk markings and stop bar locations shall be as shown elsewhere in the plans. At intersections where crosswalk markings are not required, curb ramps shall align with theoretical crosswalks unless otherwise directed.
12. Provide curb ramps to connect the pedestrian access route at each pedestrian street crossing. Handrails are not required on curb ramps.
13. Curb ramps and landings shall be constructed and paid for in accordance with Item 531 "Sidewalks".
14. Place concrete at a minimum depth of 5" for ramps, flares and landings, unless otherwise directed.
15. Furnish and install No. 3 reinforcing steel bars at 18" o.c. both ways, unless otherwise directed.
16. Provide a smooth transition where the curb ramps connect to the street.
17. Curbs shown on sheet 1 within the limits of payment are considered part of the curb ramp for payment, whether it is concrete curb, gutter, or combined curb and gutter.
18. Existing features that comply with applicalble standards may remain in place unless otherwise shown on the plans.

DETECTABLE WARNING MATERIAL

19. Curb ramps must contain a detectable warning surface that consists of raised truncated domes complying with PROWAG. The surface must contrast visually with adjoining surfaces, including side flares. Furnish and install an approved cast-in-place dark brown or dark red detectable warning surface material adjacent to uncolored concrete, unless specified elsewhere in the plans.
20. Detectable Warning Materials must meet TxDOT Departmental Materials Specification DMS 4350 and be listed on the Material Producer List. Install products in accordance with manufacturer's specifications.
21. Detectable warning surfaces must be firm, stable and slip resistant.
22. Detectable warning surfaces shall be a minimum of 24 inches in depth in the direction of pedestrian travel, and extend the full width of the curb ramp or landing where the pedestrian access route enters the street.
23. Detectable warning surfaces shall be located so that the edge nearest the curb line is at the back of curb and neither end of that edge is greater than 5 feet from the back of curb. Detectable warning surfaces may be curved along the corner radius.
24. Shaded areas on Sheet 1 of 4 indicate the approximate location for the detectable warning surface for each curb ramp type.

DETECTABLE WARNING PAVERS (IF USED)

25. Furnish detectable warning paver units meeting all requirements of ASTM C-936, C-33. Lay in a two by two unit basket weave pattern or as directed.
26. Lay full-size units first followed by closure units consisting of at least 25 percent (25%) of a full unit. Cut detectable warning paver units using a power saw.

SIDEWALKS

27. Provide clear ground space at operable parts, including pedestrian push buttons. Operable parts shall be placed within unobstructed reach range specified in PROWAG section R406.
28. Place traffic signal or illumination poles, ground boxes, controller boxes, signs, drainage facilities and other items so as not to obstruct the pedestrian access route or clear ground space.
29. Street grades and cross slopes shall be as shown elsewhere in the plans.
30. Changes in level greater than 1/4 inch are not permitted.
31. The least possible grade should be used to maximize accessibility. The running slope of sidewalks and crosswalks within the public right of way may follow the grade of the parallel roadway. Where a continuous grade greater than five percent (5%) must be provided, handrails may be desirable to improve accessibility. Handrails may also be needed to protect pedestrians from potentially hazardous conditions. If provided, handrails shall comply with PROWAG R409.
32. Handrail extensions shall not protrude into the usable landing area or into intersecting pedestrian routes.
33. Driveways and turnouts shall be constructed and paid for in accordance with Item "Intersections, Driveways and Turnouts". Sidewalks shall be constructed and paid for in accordance with Item, "Sidewalks".
34. Sidewalk details are shown elsewhere in the plans.

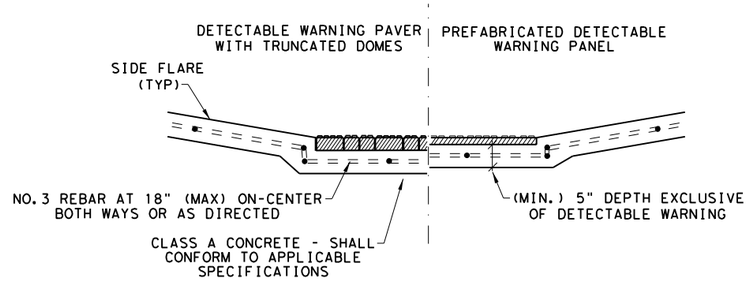

SECTION VIEW DETAIL
CURB RAMP AT DETECTIBLE WARNINGS

DETECTABLE WARNING SURFACE DETAILS

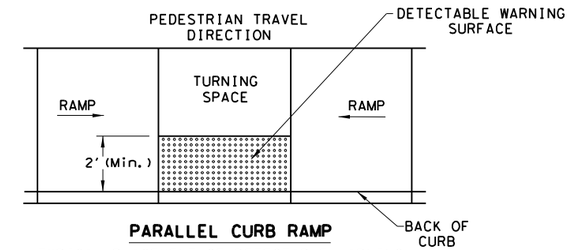

PARALLEL CURB RAMP

TYPICAL PLACEMENT OF DETECTABLE WARNING SURFACE ON LANDING AT STREET EDGE.

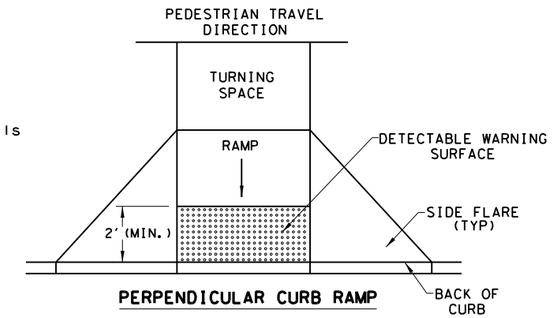

PERPENDICULAR CURB RAMP

TYPICAL PLACEMENT OF DETECTABLE WARNING SURFACE ON SLOPING RAMP RUN.

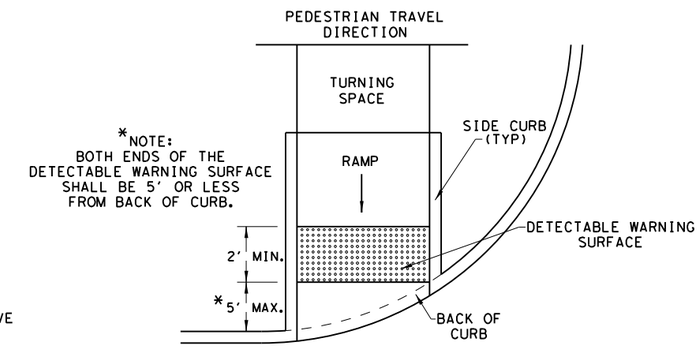

DIRECTIONAL CURB RAMP

TYPICAL PLACEMENT OF DETECTABLE WARNING SURFACE ON SLOPING RAMP RUN.

SHEET 2 OF 4

Texas Department of Transportation — Design Division Standard

PEDESTRIAN FACILITIES CURB RAMPS

PED-18

FILE: ped18	DN: TxDOT	CK: KM	DW: VP	CK: PK & JG
© TxDOT: MARCH, 2002	CONT	SECT	JOB	HIGHWAY
REVISIONS REVISED 08,2005 REVISED 06,2012 REVISED 01,2018	0922	33	076	CS
	DIST	COUNTY		SHEET NO.
	LRD	WEBB		85

DATE:
FILE:

DISCLAIMER:
The use of this standard is governed by the "Texas Engineering Practice Act". No warranty of any kind is made by TxDOT for any purpose whatsoever. TxDOT assumes no responsibility for the conversion of this standard to other formats or for incorrect results or damages resulting from its use.

SIDEWALK TREATMENT AT DRIVEWAYS

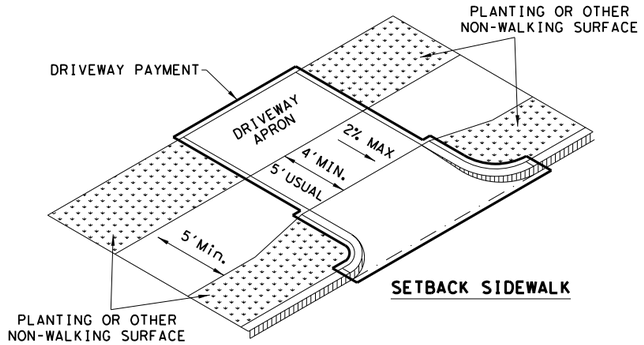

SETBACK SIDEWALK

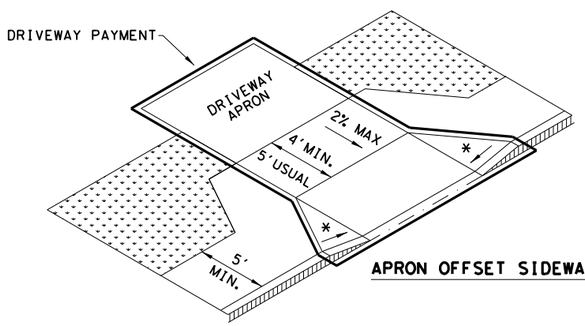

APRON OFFSET SIDEWALK

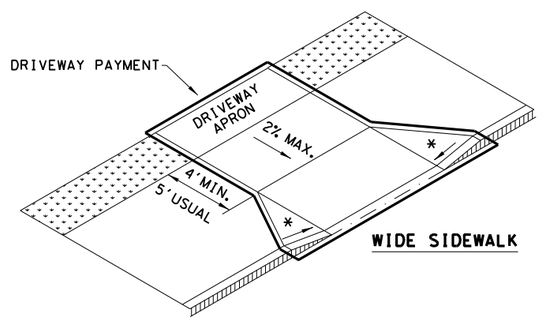

WIDE SIDEWALK

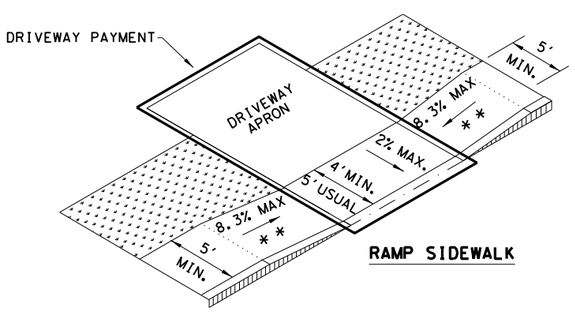

RAMP SIDEWALK

NOTES:

* WHERE DRIVEWAYS CROSS THE PEDESTRIAN ROUTE, SIDES SHALL BE FLARED AT 10% MAX SLOPE.

* * IF CURB HEIGHT IS GREATER THAN 6 INCHES, USE GRADE LESS THAN OR EQUAL TO 5%. HANDRAIL AND DETECTABLE WARNING ARE NOT REQUIRED.

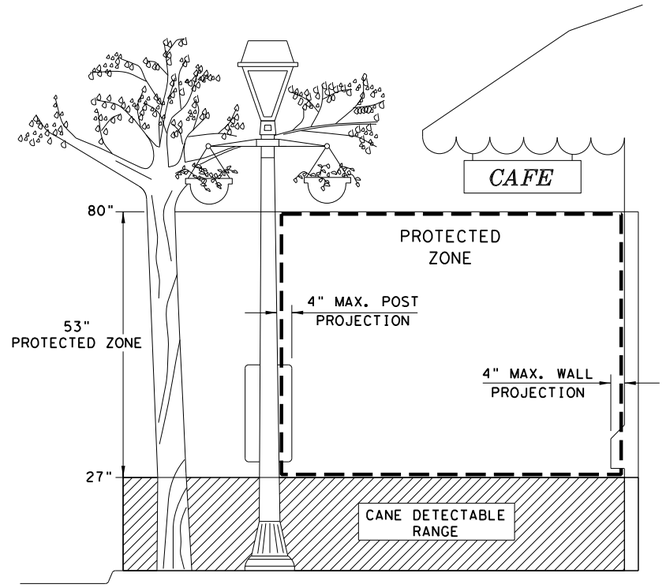

PROTECTED ZONE

NOTE: IN PEDESTRIAN CIRCULATION AREA, MAXIMUM 4" PROJECTION FOR POST OR WALL MOUNTED OBJECTS BETWEEN 27" AND 80" ABOVE THE SURFACE.

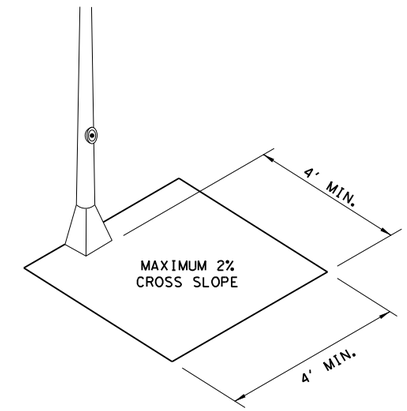

CLEAR SPACE ADJACENT TO PEDESTRIAN PUSH BUTTON

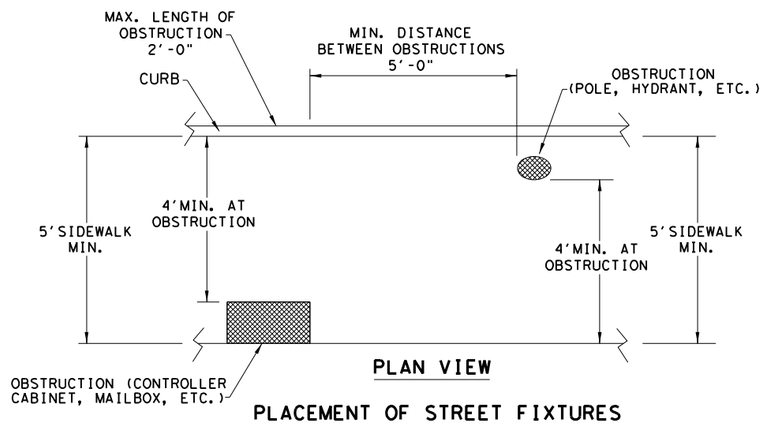

PLAN VIEW

PLACEMENT OF STREET FIXTURES

NOTE: ITEMS NOT INTENDED FOR PUBLIC USE. MINIMUM 4' X 4' CLEAR GROUND SPACE REQUIRED AT PUBLIC USE FIXTURES.

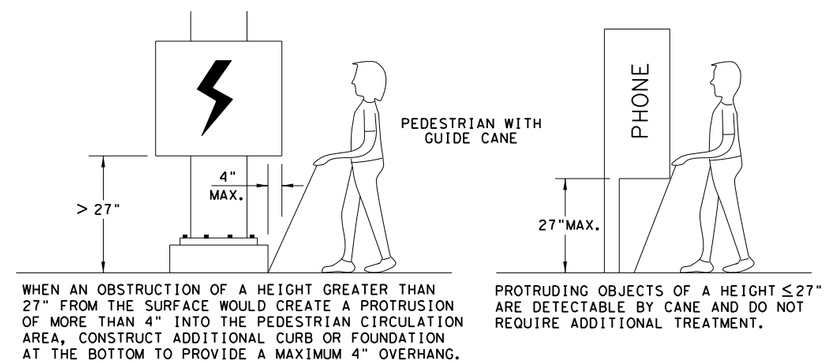

WHEN AN OBSTRUCTION OF A HEIGHT GREATER THAN 27" FROM THE SURFACE WOULD CREATE A PROTRUSION OF MORE THAN 4" INTO THE PEDESTRIAN CIRCULATION AREA, CONSTRUCT ADDITIONAL CURB OR FOUNDATION AT THE BOTTOM TO PROVIDE A MAXIMUM 4" OVERHANG.

PROTRUDING OBJECTS OF A HEIGHT ≤27" ARE DETECTABLE BY CANE AND DO NOT REQUIRE ADDITIONAL TREATMENT.

DETECTION BARRIER FOR VERTICAL CLEARANCE < 80"

SHEET 3 OF 4

Texas Department of Transportation — Design Division Standard

PEDESTRIAN FACILITIES CURB RAMPS

PED-18

FILE: ped18	DN: TxDOT	DW: VP	CK: KM	CK: PK & JG
© TxDOT: MARCH, 2002	CONT	SECT	JOB	HIGHWAY
REVISIONS REVISED 08,2005 REVISED 06,2012 REVISED 01,2018	0922	33	076	CS
	DIST		COUNTY	SHEET NO.
	LRD		WEBB	86

DATE:
FILE:

DISCLAIMER:
The use of this standard is governed by the "Texas Engineering Practice Act". No warranty of any kind is made by TxDOT for any purpose whatsoever. TxDOT assumes no responsibility for the conversion of this standard to other formats or for incorrect results or damages resulting from its use.

TYPICAL CROSSING LAYOUTS

SEE SHEET 1 OF 4 FOR DETAILS AND DIMENSIONS

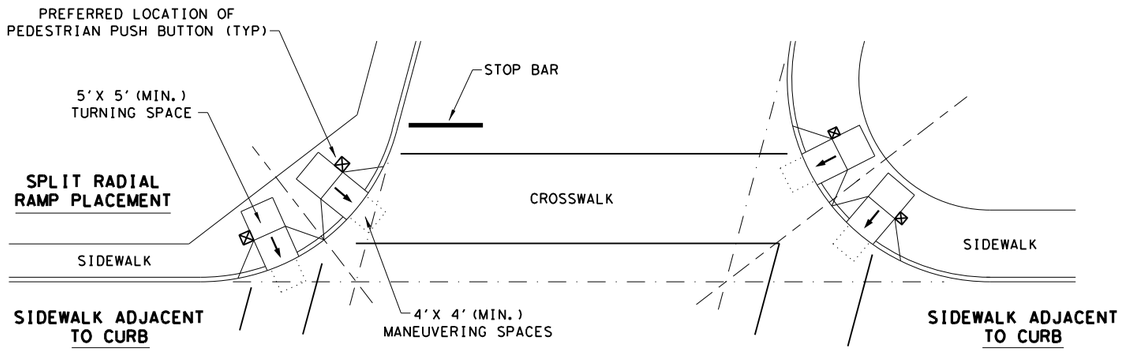

SKEWED INTERSECTION WITH "LARGE" RADIUS

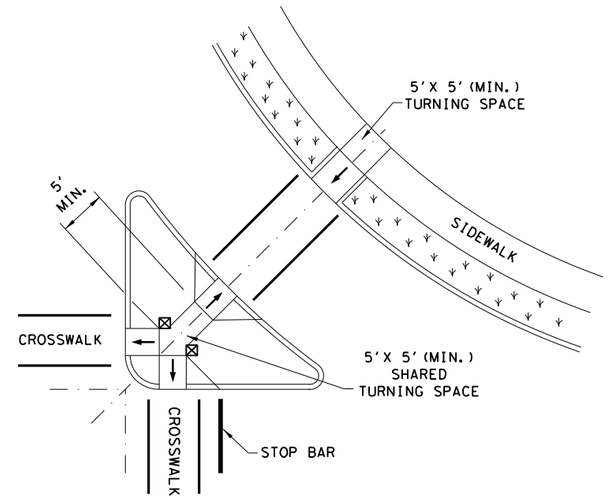

AT INTERSECTION
W/FREE RIGHT TURN & ISLAND

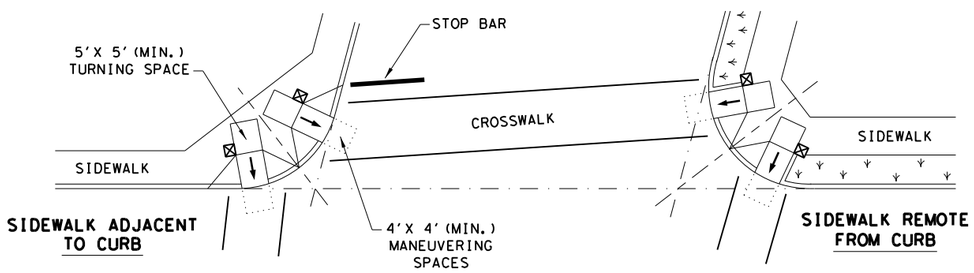

SKEWED INTERSECTION WITH "SMALL" RADIUS

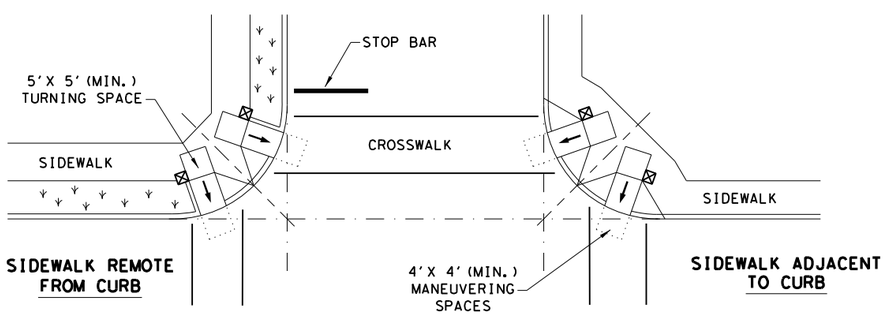

NORMAL INTERSECTION WITH "SMALL" RADIUS

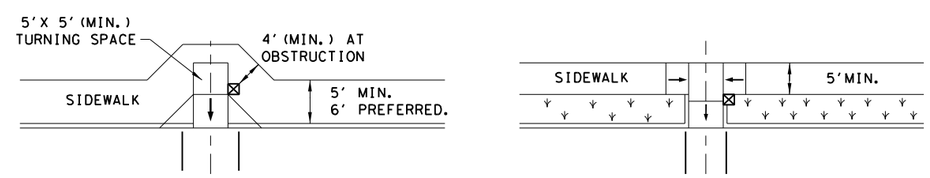

MID-BLOCK PLACEMENT
PERPENDICULAR RAMPS

LEGEND:

SHOWS DOWNWARD SLOPE. →

DENOTES PREFERRED LOCATION OF PEDESTRIAN PUSH BUTTON (IF APPLICABLE). ⊠

DENOTES PLANTING OR NON-WALKING SURFACE NOT PART OF PEDESTRIAN CIRCULATION PATH.

SHEET 4 OF 4

Texas Department of Transportation — Design Division Standard

PEDESTRIAN FACILITIES CURB RAMPS

PED-18

FILE: ped18	DN: TxDOT	DW: VP	CK: KM	CK: PK & JG
© TxDOT: MARCH, 2002	CONT	SECT	JOB	HIGHWAY
REVISIONS	0922	33	076	CS
REVISED 08,2005 REVISED 06,2012 REVISED 01,2018	DIST	COUNTY		SHEET NO.
	LRD	WEBB		87

DATE:
FILE:

DISCLAIMER:
THE USE OF THIS STANDARD IS GOVERNED BY THE "TEXAS ENGINEERING PRACTICE ACT". NO WARRANTY OF ANY KIND IS MADE BY TXDOT FOR ANY PURPOSE WHATSOEVER. TXDOT ASSUMES NO RESPONSIBILITY FOR THE CONVERSIONOF THIS STANDARD TO OTHER FORMATS OR FOR INCORRECT RESULTS OR DAMAGES RESULTING FROM ITS USE.

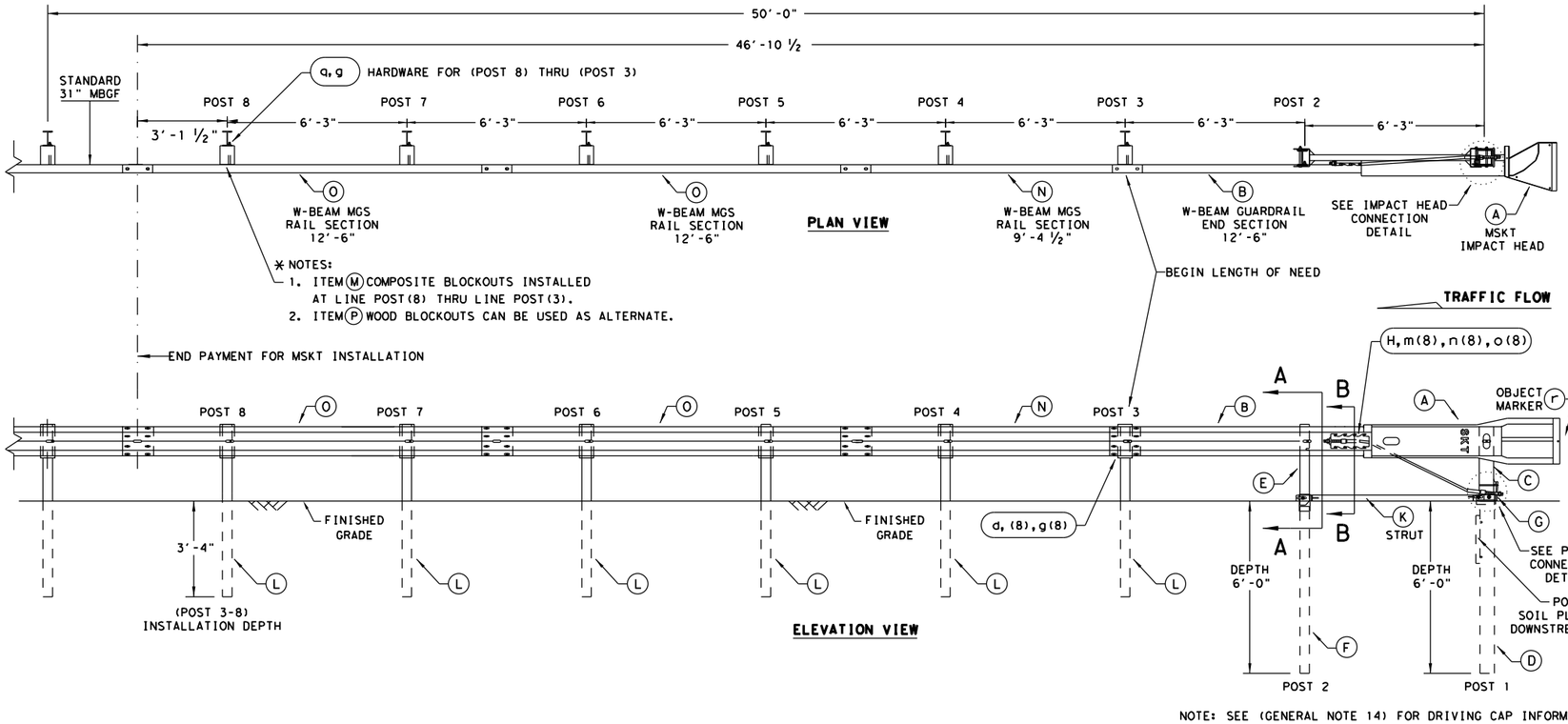

NOTE: SEE (GENERAL NOTE 14) FOR DRIVING CAP INFORMATION.

✱ NOTES:
1. ITEM (M) COMPOSITE BLOCKOUTS INSTALLED AT LINE POST(8) THRU LINE POST(3).
2. ITEM (P) WOOD BLOCKOUTS CAN BE USED AS ALTERNATE.

GENERAL NOTES

1. FOR SPECIFIC INFORMATION REGARDING INSTALLATION AND TECHNICAL GUIDANCE OF THE SYSTEM, CONTACT: ROAD SYSTEMS, INC. (432)263-2435. 3616 OLD HOWARD COUNTY AIRPORT, BIG SPRING, TX 79720
2. FOR INSTALLATION, REPAIR AND MAINTENANCE REFER TO THE; MSKT END TERMINAL, PRODUCT DESCRIPTION ASSEMBLY MANUAL (PUBLICATION~062717).
3. APPLY HIGH INTENSITY REFLECTIVE SHEETING, "OBJECT MARKER" ON THE FRONT FACE OF THE DEVICE PER MANUFACTURER'S RECOMMENDATIONS. OBJECT MARKER SHALL CONFORM TO THE STANDARDS REQUIRED IN TEXAS MUTCD.
4. FOR POST (LEAVE-OUT) INSTALLATION AND GUIDANCE SEE TXDOT'S LATEST ROADWAY MOW STRIP STANDARD.
5. HARDWARE (BOLTS, NUTS, & WASHERS) SHALL BE GALVANIZED IN ACCORDANCE WITH ITEM 445, "GALVANIZING". FITTINGS SHALL BE SUBSIDIARY TO THE BID ITEM.
6. SYSTEM SHOWN USING STEEL WIDE FLANGE POSTS WITH COMPOSITE BLOCKOUTS.
7. A COMPOSITE MATERIAL BLOCKOUTS THAT MEETS THE REQUIREMENTS OF DMS-7210, MAY BE SUBSTITUTED FOR BLOCKOUTS OF SIMILAR DIMENSIONS. SEE CONSTRUCTION DIVISION MATERIAL PRODUCER LIST (MPL) FOR CERTIFIED PRODUCERS.
8. IF SOLID ROCK IS ENCOUNTERED IN THE AREA OF (POST 1) AND / OR (POST 2) CONTACT THE MANUFACTURER, & REFER TO THE LATEST ROADWAY MBGF STANDARD FOR INSTALLATION GUIDANCE.
9. POSTS SHALL NOT BE SET IN CONCRETE.
10. SYSTEM MUST BE ATTACHED TO STANDARD 31" MBGF.
11. UNDER NO CIRCUMSTANCES SHALL THE GUARDRAIL WITHIN THE MSKT SYSTEM BE CURVED.
12. A FLARE RATE OF UP TO 25:1 MAY BE USED TO PREVENT THE TERMINAL HEAD FROM ENCROACHING ON THE SHOULDER. THE FLARE MAY BE DECREASED OR ELIMINATED FOR SPECIFIC INSTALLATIONS, IF DIRECTED BY THE ENGINEER.
13. THE SYSTEM IS SHOWN WITH TWO 12'-6" MBGF PANELS, ONE 25'-0" MBGF PANEL IS ALSO ALLOWED IN THEIR PLACE.
14. A DRIVING CAP WITH A TIMBER OR PLASTIC INSERT SHALL BE USED WHEN DRIVING POSTS 3-8 TO PREVENT DAMAGE TO THE GALVANIZING ON TOP OF THE POST. SPECIAL DRIVING CAP TO BE USED ON LOWER POSTS 1 & 2 TO PREVENT DAMAGE TO THE WELDED PLATES.

ITEM	QTY	MAIN SYSTEM COMPONENTS	ITEM NUMBERS
A	1	MSKT IMPACT HEAD	MS3000
B	1	W-BEAM GUARDRAIL END SECTION, 12 Ga.	SF1303
C	1	POST 1 - TOP (6" X 6" X ⅛" TUBE)	MTPHP1A
D	1	POST 1 - BOTTOM (6' W6X15)	MTPHP1B
E	1	POST 2 - ASSEMBLY TOP	UHP2A
F	1	POST 2 - ASSEMBLY BOTTOM (6' W6X9)	HP2B
G	1	BEARING PLATE	E750
H	1	CABLE ANCHOR BOX	S760
J	1	BCT CABLE ANCHOR ASSEMBLY	E770
K	1	GROUND STRUT	MS785
L	6	W6x9 OR W6x8.5 STEEL POST	P621
M	6	COMPOSITE BLOCKOUTS (SEE NOTES: ✱)	CBSP-14
N	1	W-BEAM MGS RAIL SECTION (9'-4 ½")	G12025
O	2	W-BEAM MGS RAIL SECTION (12'-6")	G1203A
P	6	WOOD BLOCKOUT 6" X 8" X 14" (ALTERNATIVE ITEMS NOT SHOWN. ✱✱)	P675
Q	1	W-BEAM MGS RAIL SECTION (25'-0") (✱ ITEM(P) 8" WOOD-BLOCKOUT; ✱✱ ITEM(Q) 25'GUARD FENCE PANEL)	G1209
		SMALL HARDWARE	
a	2	5/16" x 1" HEX BOLT (GRD 5)	B5160104A
b	4	5/16" WASHER	W0516
c	2	5/16" HEX NUT	N0516
d	25	⅝" Dia. x 1 ¼" SPLICE BOLT (POST 2)	B580122
e	2	⅝" Dia. x 9" HEX BOLT (GRD A449)	B580904A
f	3	⅝" WASHER	W050
g	33	⅝" Dia. H.G.R NUT	N050
h	1	¾" Dia. x 8 ½" HEX BOLT (GRD A449)	B340854A
j	1	¾" Dia. HEX NUT	N030
k	2	1 ANCHOR CABLE HEX NUT	N100
l	2	1 ANCHOR CABLE WASHER	W100
m	8	½" x 1 ¼" A325 BOLT WITH CAPTIVE WASHER	SB12A
n	8	½" STRUCTURAL NUTS	N012A
o	8	1 1/16" O.D. x 9/16" I.D. STRUCTURAL WASHERS	W012A
p	1	BEARING PLATE RETAINER TIE	CT-100ST
q	6	⅝" x 10" H.G.R. BOLT	B581002
r	1	OBJECT MARKER 18" X 18"	E3151

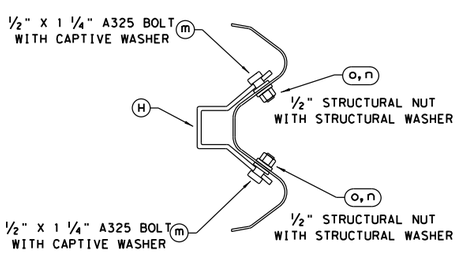

SECTION B-B
ANCHOR BRACKET

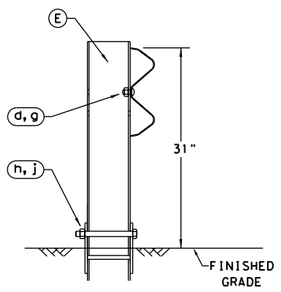

POST 2
SECTION A-A

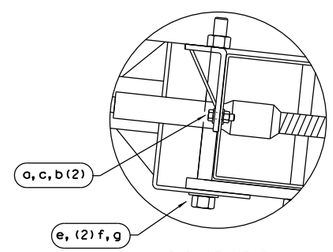

IMPACT HEAD
CONNECTION DETAIL

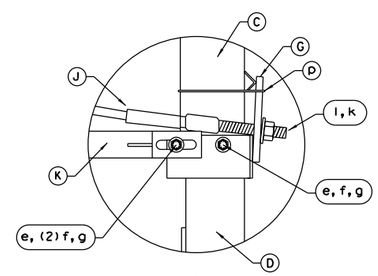

POST 1
CONNECTION DETAIL

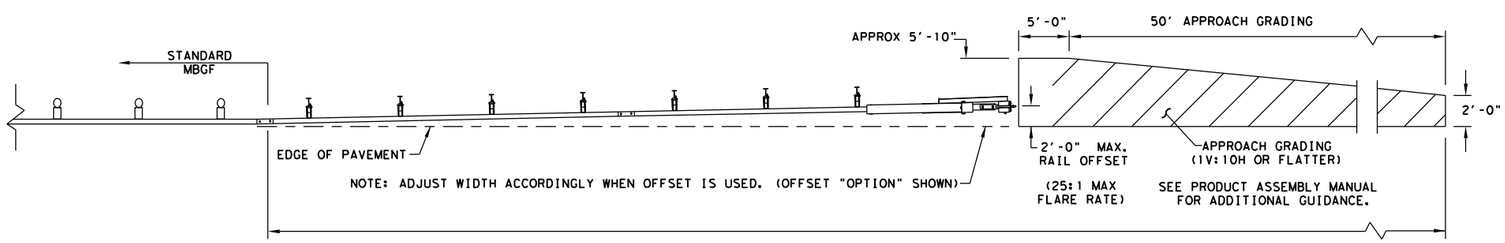

NOTE: ADJUST WIDTH ACCORDINGLY WHEN OFFSET IS USED. (OFFSET "OPTION" SHOWN)

APPROACH GRADING AT GUARDRAIL END TREATMENTS

NOTE: TXDOT GENERIC APPROACH GRADING LAYOUT USED FOR ALL TANGENT TYPE END TREATMENTS.

NOTE: THIS STANDARD IS A BASIC REPRESENTATION OF THE MSKT END TERMINAL, IT IS NOT INTENDED TO REPLACE THE PRODUCT DESCRIPTION ASSEMBLY MANUAL.

Texas Department of Transportation — Design Division Standard

SINGLE GUARDRAIL TERMINAL
MSKT-MASH-TL-3
SGT(12S)31-18

FILE: sgt12s3118.dgn	DN: TxDOT	CK: KM	DW: VP	CK: CL
© TxDOT: APRIL 2018	CONT	SECT	JOB	HIGHWAY
REVISIONS	0922	33	076	CS
	DIST		COUNTY	SHEET NO.
	LRD		WEBB	88

DATE:
FILE:

DISCLAIMER:
THE USE OF THIS STANDARD IS GOVERNED BY THE "TEXAS ENGINEERING PRACTICE ACT". NO WARRANTY OF ANY KIND IS MADE BY TXDOT FOR ANY PURPOSE WHATSOEVER. TXDOT ASSUMES NO RESPONSIBILITY FOR THE CONVERSION OF THIS STANDARD TO OTHER FORMATS OR FOR INCORRECT RESULTS OR DAMAGES RESULTING FROM ITS USE.

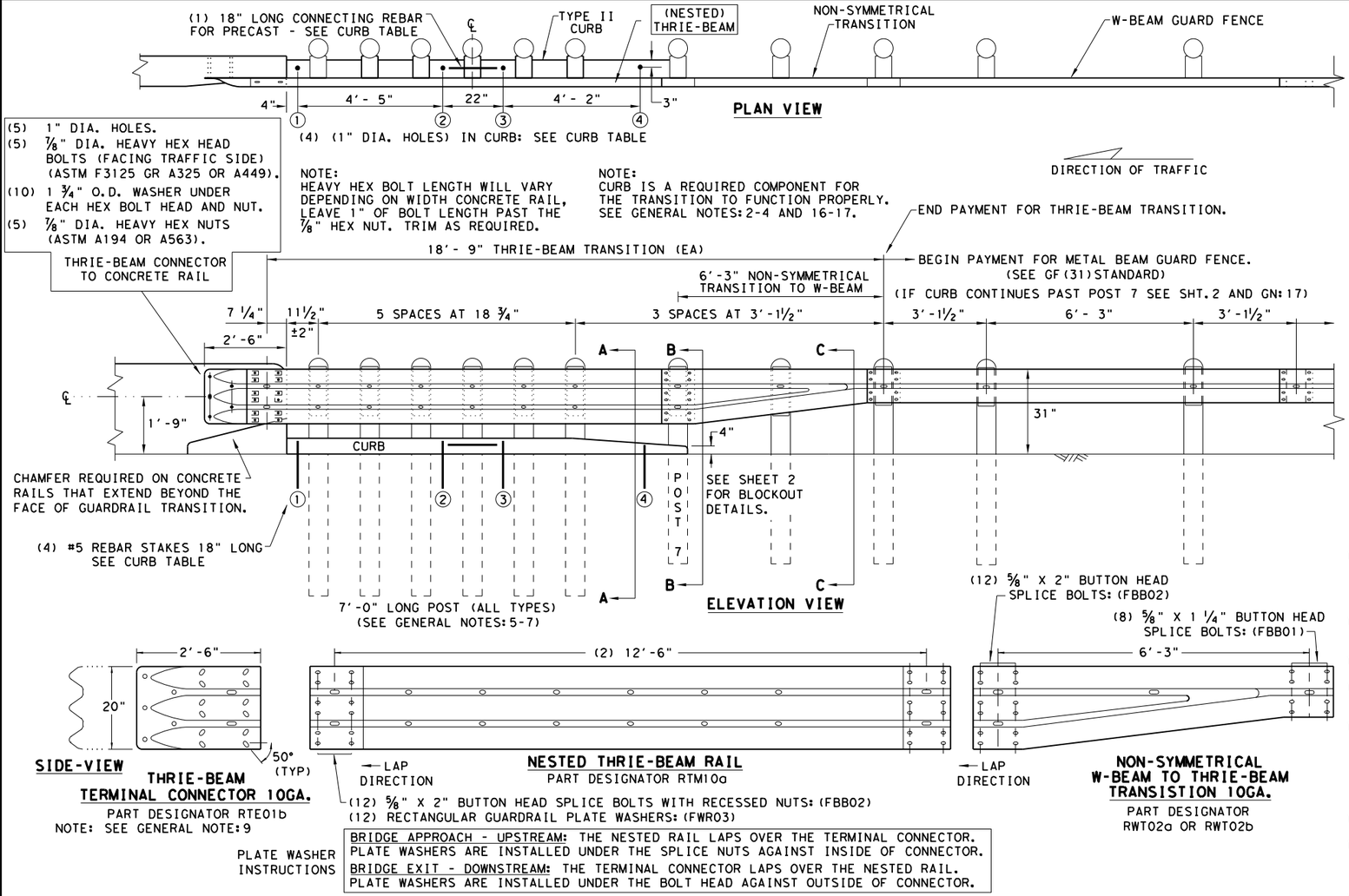

PLATE WASHER INSTRUCTIONS

BRIDGE APPROACH - UPSTREAM: THE NESTED RAIL LAPS OVER THE TERMINAL CONNECTOR. PLATE WASHERS ARE INSTALLED UNDER THE SPLICE NUTS AGAINST INSIDE OF CONNECTOR.
BRIDGE EXIT - DOWNSTREAM: THE TERMINAL CONNECTOR LAPS OVER THE NESTED RAIL. PLATE WASHERS ARE INSTALLED UNDER THE BOLT HEAD AGAINST OUTSIDE OF CONNECTOR.

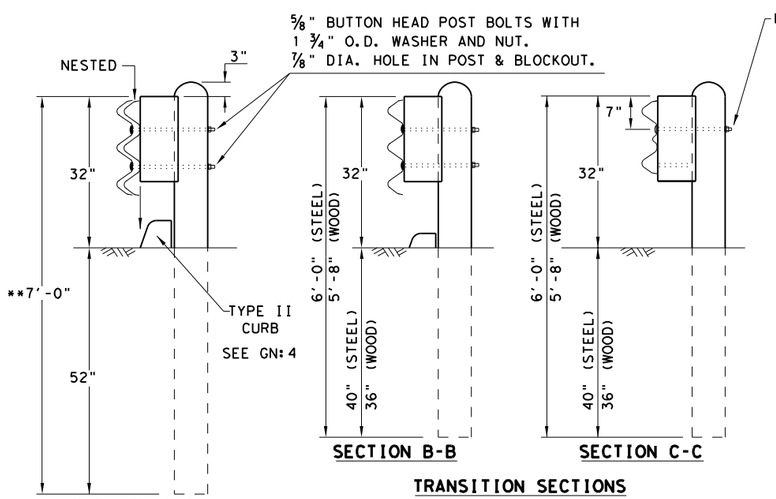

TRANSITION SECTIONS

NOTE: ALL POST TYPES, SEE GENERAL NOTE: 5 & 6

NOTE: ** "WOOD" INDICATES DIMENSIONS FOR BOTH ROUND AND RECTANGULAR WOOD POST SYSTEMS.

THRIE-BEAM TERMINAL - CURB TABLE
PRECAST CURB FULL LENGTH EQUALS 12'- 2" THE PRECAST CURB MAY BE FORMED INTO TWO SECTIONS.
CURB (1) LENGTH 5'- 8" CURB (2) LENGTH 6'- 6" TAPER CURB (2) TO A HEIGHT OF 4" AT POST 7
CONNECTING PRECAST CURB SECTIONS (1) & (2): FORM OR CORE 1" DIA. HOLE 9" LONG INTO EACH CURB END. USE (1) #5 GR.60 REBAR 18" LONG TO CONNECT BOTH CURBS.
SECURING PRECAST OR CAST-IN-PLACE TO FINISHED GRADE *: FORM OR CORE (4) 1" DIA. HOLES, SEE PLAN AND ELEVATION VIEWS FOR HOLE LOCATIONS. DRIVE (4) #5 GR.60 REBAR STAKES 18" LONG INTO THE GROUND AND 1/2" BELOW TOP OF CURB. FILL HOLES WITH APPROVED GROUT MIXTURE.

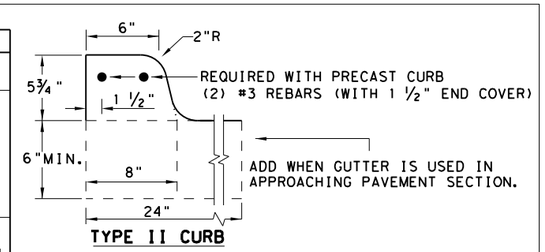

TYPE II CURB

NOTE: OPTIONS FOR TYPE II CURB:
1. PRECAST
2. CAST-IN-PLACE

* NOTES: NOT NEEDED FOR CAST-IN-PLACE.
SEE TYPE II CURB DETAIL FOR REBAR AND COVER REQUIREMENTS.
PERCUSSION DRILLING IS NOT PERMITTED WITH:
TYPE II CURB, BRIDGE RAIL OR CONCRETE TRAFFIC RAIL.

TYPE II CURB DETAILS

GENERAL NOTES

1. CONTACT THE DESIGN DIVISION FOR DRAINAGE CUT OUT OPTIONS NEEDED WITHIN THE CURB SECTION OF THE THRIE-BEAM TRANSITION. (512) 416-2678
2. CONCRETE CURB MAY BE CAST-IN-PLACE OR PRECAST AS SHOWN ON THIS SHEET. WHEN USED IN CONJUNCTION WITH THE THRIE-BEAM TRANSITIONS, CURB SHALL BE TYPE II (5- 3/4" HEIGHT); SEE CURRENT CCCG STANDARD SHEET FOR FURTHER DETAILS. IF OTHER CURB HEIGHTS ARE SHOWN IN THE PLANS IN CONJUNCTION WITH THE TRANSITION, THE CURB HEIGHT MAY BE FROM 4" TO 8" WITH A RELATIVELY VERTICAL FACE. CONCRETE CURB SHALL BE CONTINUOUS TO THE SEVENTH POST UNLESS OTHERWISE SHOWN IN THE PLANS. SEE GENERAL NOTE: 17 FOR CIRCUMSTANCES WHERE CURB CONTINUES PAST POST 7.
3. CONCRETE CURB TYPE II SUBSIDIARY TO "METAL BEAM GUARD FENCE TRANSITION". IF NO ADDITIONAL CURB IS INDICATED BEYOND THE TRANSITION, THEN ANY CURB HEIGHT GREATER THAN 4" WILL BE TAPERED DOWN BEGINNING AT THE LAST 7 FT. POST TO A MAXIMUM HEIGHT OF 4" AT POST 7. IF SHOWN ELSEWHERE IN THE PLANS, ADDITIONAL CURB UNDERNEATH GUARDRAIL WILL BE PAID FOR BY THE LINEAR FOOT.
4. UNLESS OTHERWISE SHOWN IN THE PLANS, TRANSITIONS SHALL BE PLACED WITH THE BLOCKOUT FACE IN FRONT OF OR DIRECTLY ABOVE THE CURB FACE. SEE SECTION A-A.
5. FOR ROUND WOOD POST SYSTEMS, ALL ROUND WOOD POSTS SHALL BE 7 1/2" DIA. MINIMUM THROUGHOUT THE THRIE-BEAM TRANSITION.
6. THE TYPE OF POST (ROUND WOOD POST, RECTANGULAR WOOD POST OR STEEL POST) WILL BE AS SHOWN IN THE PLANS. REFER TO GF(31) STANDARD SHEET.
7. THE POST LENGTH SHALL BE MARKED ON ALL 7'- 0" LONG POSTS BY THE MANUFACTURER. THE MARK SHALL BE LOCATED WITHIN THE TOP 1 FT. REGION OF THE POST, AT LEAST 5/8" IN HEIGHT, AND VISIBLE AFTER INSTALLATION. WOODEN POSTS SHALL BE MARKED WITH A BRAND, AND STEEL POSTS WITH A STENCIL BEFORE GALVANIZING.
8. POSTS SHALL NOT BE SET IN CONCRETE, OF ANY DEPTH.
9. RAIL ELEMENTS SHALL MEET THE REQUIREMENTS OF ITEM 540, "METAL BEAM GUARD FENCE" EXCEPT AS MODIFIED ON THE PLANS. THE THRIE-BEAM TERMINAL CONNECTOR AND THE THRIE-BEAM TRANSITION TO W-BEAM SHALL BE OF THE SAME MATERIAL, BUT SHALL NOT BE LESS THAN 10 GAUGE. CONTRACTOR SHALL VERIFY THAT THE LOCATIONS OF BOLT HOLES MATCH THOSE IN THE THRIE-BEAM TERMINAL CONNECTOR PRIOR TO ORDERING MATERIALS.
10. BUTTON HEAD "POST BOLTS & NUTS" SHALL MEET THE REQUIREMENTS OF (ASTM A307), AND SHALL BE OF SUFFICIENT LENGTH TO EXTEND THROUGH THE FULL THICKNESS OF THE NUT AND 5/8" WASHER (FWC16a) AND NOT MORE THAN 1" BEYOND IT. TRIM REMAINING BOLT LENGTH TO MEET REQUIRED LENGTH.
11. FITTINGS (BOLTS, NUTS, AND WASHERS) SHALL BE GALVANIZED IN ACCORDANCE WITH ITEM 445, "GALVANIZING". FITTINGS SHALL BE SUBSIDIARY TO THE BID ITEM.
12. CROWN SHALL BE WIDENED TO ACCOMMODATE TRANSITIONS.
13. WHERE SOLID ROCK IS ENCOUNTERED, CONTACT THE DESIGN DIVISION FOR ADDITIONAL GUIDANCE. (512) 416-2678
14. UNLESS OTHERWISE SHOWN IN THE PLANS, A COMPOSITE MATERIAL BLOCK THAT MEETS THE REQUIREMENTS OF DMS-7210, "COMPOSITE MATERIAL POSTS AND BLOCKS FOR METAL BEAM GUARD FENCE" MAY BE SUBSTITUTED FOR BLOCKS OF SIMILAR DIMENSIONS. TXDOT'S MATERIALS AND TESTS DIVISION MAINTAINS A MATERIAL PRODUCER LIST (MPL) FOR PRODUCERS OF MATERIALS CONFORMING TO DMS-7210. ONLY PRODUCERS ON THE MPL CAN FURNISH COMPOSITE MATERIAL BLOCKS.
15. REFER TO GF(31) STANDARD SHEET & BRIDGE RAILING DETAILS FOR ADDITIONAL DETAILS.
16. THE INSTALLATION OF THE TYPE II CURB IS CRITICAL FOR THE PERFORMANCE OF THE THRIE-BEAM TRANSITION SYSTEM. THE CURB PREVENTS (VEHICLE WHEEL SNAGGING) AT THE CONCRETE RAIL AND IS REQUIRED TO MEET MASH CRASH TEST CRITERIA.
17. IF CURB EXTENDS BEYOND POST 7, 25' OF NESTED W-BEAM GUARDRAIL SHALL BE INSTALLED BEYOND THE PAY LIMITS OF THRIE-BEAM TRANSITION SECTION, (SEE SHT.2). PAYMENT FOR THIS 25' SECTION WILL BE BY LINEAR FOOT, PAY ITEM "0540 6XXX MTL W-BEAM GD FEN (NESTED)(TIM POST)" OR "540 6XXX MTL W-BEAM GD FEN (NESTED)(STEEL POST)" AS APPLICABLE FOR POST TYPE. SEE SHT.2 FOR ADDITIONAL INFORMATION.

HIGH-SPEED TRANSITION

SHEET 1 OF 2

Texas Department of Transportation — Design Division Standard

METAL BEAM GUARD FENCE THRIE-BEAM TRANSITION TL-3 MASH COMPLIANT

GF(31)TR TL3-20

FILE: gf31tr1320.dgn	DN: TxDOT	CK: KM	DW: VP	CK: CGL/AG
©TxDOT: NOVEMBER 2020	CONT	SECT	JOB	HIGHWAY
REVISIONS	0922	33	076	CS
	DIST		COUNTY	SHEET NO.
	LRD		WEBB	89

DATE:
FILE:

DISCLAIMER:
THE USE OF THIS STANDARD IS GOVERNED BY THE "TEXAS ENGINEERING PRACTICE ACT". NO WARRANTY OF ANY KIND IS MADE BY TXDOT FOR ANY PURPOSE WHATSOEVER.
TXDOT ASSUMES NO RESPONSIBILITY FOR THE CONVERSION OF THIS STANDARD TO OTHER FORMATS OR FOR INCORRECT RESULTS OR DAMAGES RESULTING FROM ITS USE.

REQUIRED ALTERNATIVE FOR CONTINUOUS CURB EXTENDING PAST POST 7 (SEE SHT. 1 GENERAL NOTE 17)

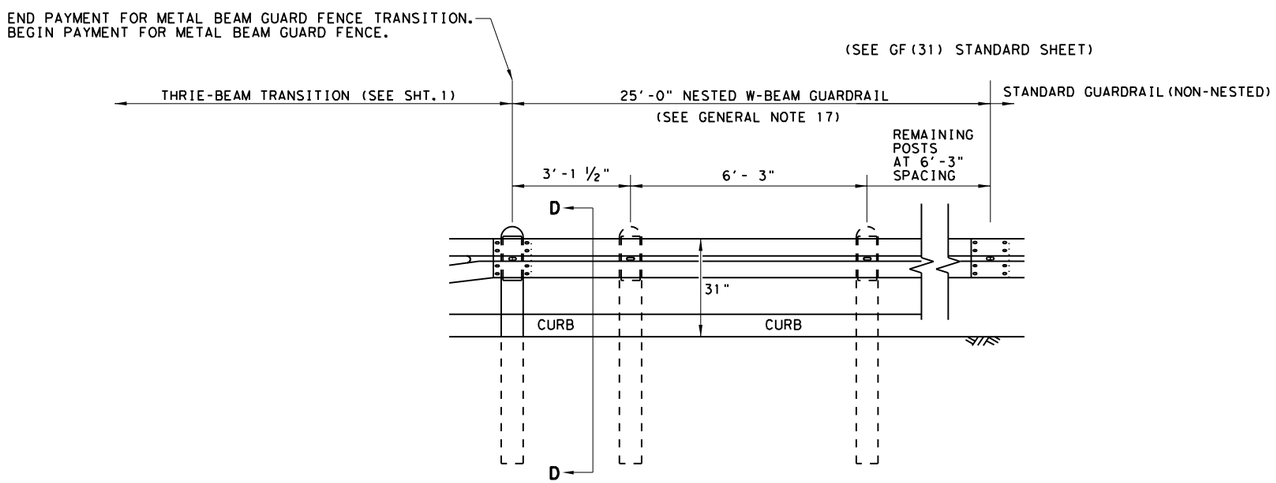

ELEVATION VIEW

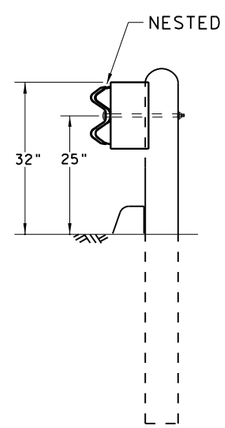

SECTION D-D

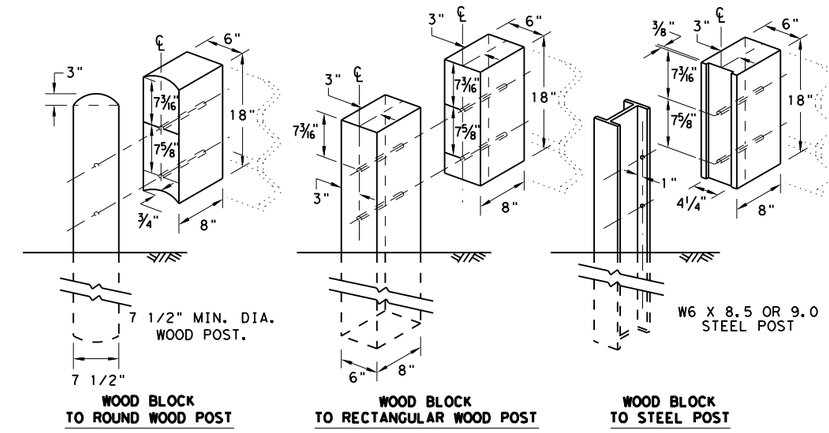

THRIE BEAM TRANSITION BLOCKOUT DETAILS

HIGH-SPEED TRANSITION

SHEET 2 OF 2

Texas Department of Transportation — Design Division Standard

METAL BEAM GUARD FENCE THRIE-BEAM TRANSITION TL-3 MASH COMPLIANT

GF(31)TR TL3-20

FILE: gf31trtl320.dgn	DN: TxDOT	CK: KM	DW: KM	CK: CGL/AG
©TxDOT: NOVEMBER 2020	CONT	SECT	JOB	HIGHWAY
REVISIONS	0922	33	076	CS
	DIST	COUNTY		SHEET NO.
	LRD	WEBB		90

DATE:
FILE:

DISCLAIMER:
THE USE OF THIS STANDARD IS GOVERNED BY THE "TEXAS ENGINEERING PRACTICE ACT". NO WARRANTY OF ANY KIND IS MADE BY TXDOT FOR ANY PURPOSE WHATSOEVER. TXDOT ASSUMES NO RESPONSIBILITY FOR THE CONVERSION OF THIS STANDARD TO OTHER FORMATS OR FOR INCORRECT RESULTS OR DAMAGES RESULTING FROM ITS USE.

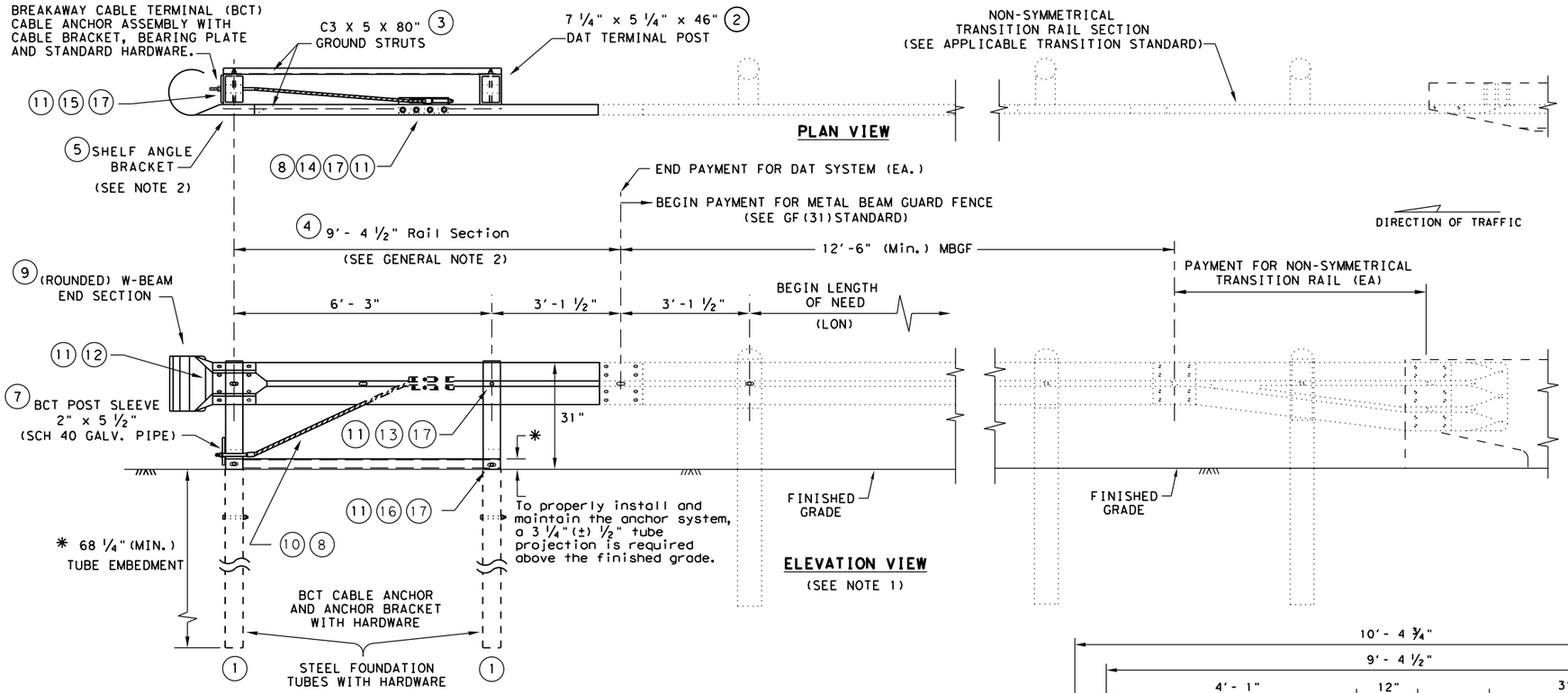

DOWNSTREAM ANCHOR TERMINAL (DAT)

NOTE: ONLY FOR DOWNSTREAM USE, WHEN LOCATED OUTSIDE THE HORIZONTAL CLEARANCE AREA OF OPPOSING TRAFFIC.

GENERAL NOTES

1. THE DETAIL SHOWN IS THE MINIMUM LENGTH OF NEED (LON) FOR A DOWNSTREAM ANCHOR TERMINAL (DAT) CONNECTED TO A CONCRETE RAIL.
2. THE RAIL SECTION AT THE END POST IS SUPPORTED BY THE SHELF ANGLE BRACKET. THE RAIL ELEMENT IS NOT ATTACHED TO THE END POST.
3. THE FOUNDATION TUBES SHALL NOT PROJECT MORE THAN 3 3/4" ABOVE THE FINISHED GRADE.
4. ALL HARDWARE FOR DAT SHALL BE ASTM A307 UNLESS OTHERWISE SHOWN.
5. REFER TO GF(31) SHEET FOR TERMINAL CONNECTION DETAILS.

MOW STRIP INSTALLATION

IF A MOW STRIP IS REQUIRED WITH THE DAT INSTALLATION THE LEAVE-OUT AREA AROUND THE STEEL FOUNDATION TUBES AND THE TWO CHANNEL STRUTS MAY BE OMITTED. THIS WILL REQUIRE A FULL POUR AT THE FOUNDATION TUBES.

#	(DAT) PARTS LIST	QTY
1	STEEL FOUNDATION TUBE	2
2	DAT TERMINAL POST	2
3	CHANNEL STRUT	2
4	TERMINAL RAIL ELEMENT	1
5	SHELF ANGLE BRACKET	1
6	BCT BEARING PLATE	1
7	BCT POST SLEEVE	1
8	GUARDRAIL ANCHOR BRACKET	1
9	(ROUNDED) W-BEAM END SECTION	1
10	BCT CABLE ANCHOR	1
11	RECESSED NUT, GUARDRAIL	20
12	1 1/4" BUTTON HEAD BOLT	4
13	10" BUTTON HEAD BOLT	2
14	5/8" X 2" HEX HEAD BOLT	8
15	5/8" X 8" HEX HEAD BOLT	4
16	5/8" X 10" HEX HEAD BOLT	2
17	5/8" FLAT WASHER	18

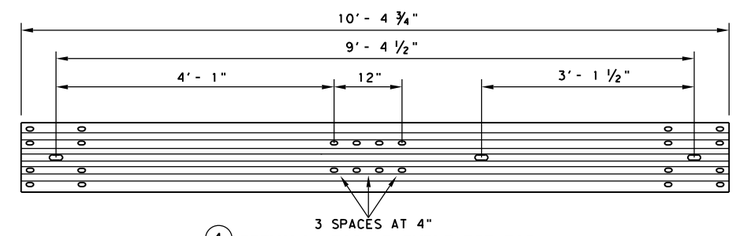

(4) TERMINAL RAIL ELEMENT FOR DAT

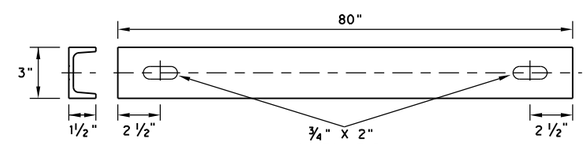

(3) CHANNEL STRUT
C3 X 5 X 80", GRADE A36

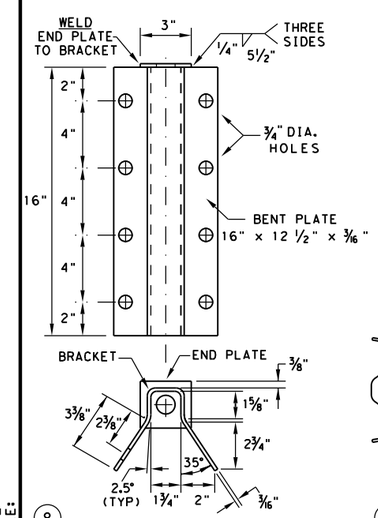

(8) GUARDRAIL ANCHOR BRACKET

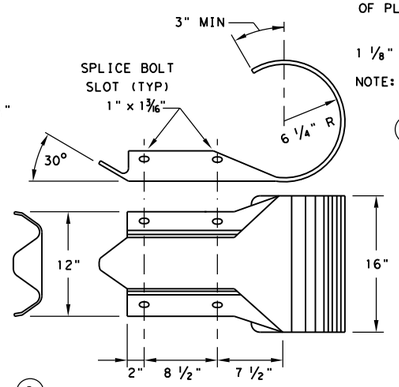

(9) W-BEAM END SECTION (ROUNDED) (12 GA.)

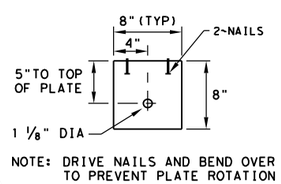

(6) BEARING PLATE
8"x 8"x 5/8" PL

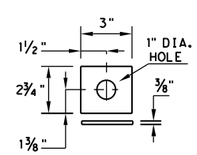

END PLATE

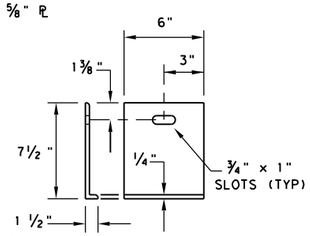

(5) SHELF ANGLE BRACKET

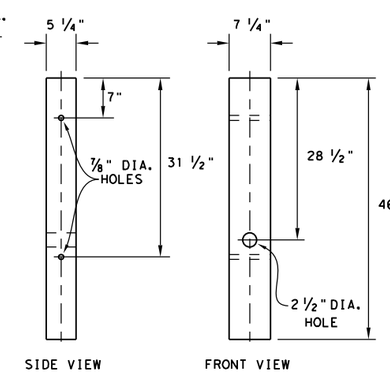

(2) TERMINAL POST
7 1/4"x 5 1/4"x 46" WOOD POST

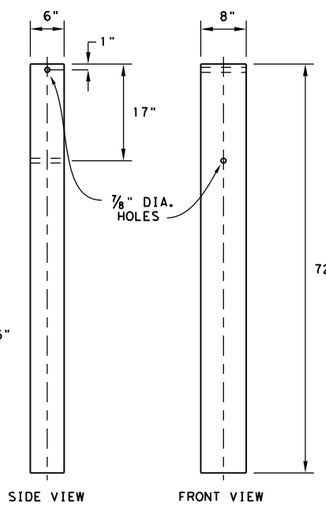

(1) STEEL FOUNDATION TUBE
6"x 8"x 1/8" x 72" STEEL TUBE

Texas Department of Transportation — Design Division Standard

METAL BEAM GUARD FENCE (DOWNSTREAM ANCHOR TERMINAL) TL-3 MASH COMPLIANT

GF(31)DAT-19

FILE: gf31dat19.dgn	DN: TxDOT	CK: KM	DW: VP	CK: CGL/AG	
©TxDOT: NOVEMBER 2019	CONT	SECT	JOB	HIGHWAY	
REVISIONS	0922	33	076	CS	
	DIST		COUNTY		SHEET NO.
	LRD		WEBB		91

DATE:
FILE:

DISCLAIMER:
THE USE OF THIS STANDARD IS GOVERNED BY THE "TEXAS ENGINEERING PRACTICE ACT". NO WARRANTY OF ANY KIND IS MADE BY TXDOT FOR ANY PURPOSE WHATSOEVER. TXDOT ASSUMES NO RESPONSIBILITY FOR THE CONVERSION OF THIS STANDARD TO OTHER FORMATS OR FOR INCORRECT RESULTS OR DAMAGES RESULTING FROM ITS USE.

TAU(M)(N) TL-3 SYSTEM LENGTH VARIES WITH TRANSITION TYPE

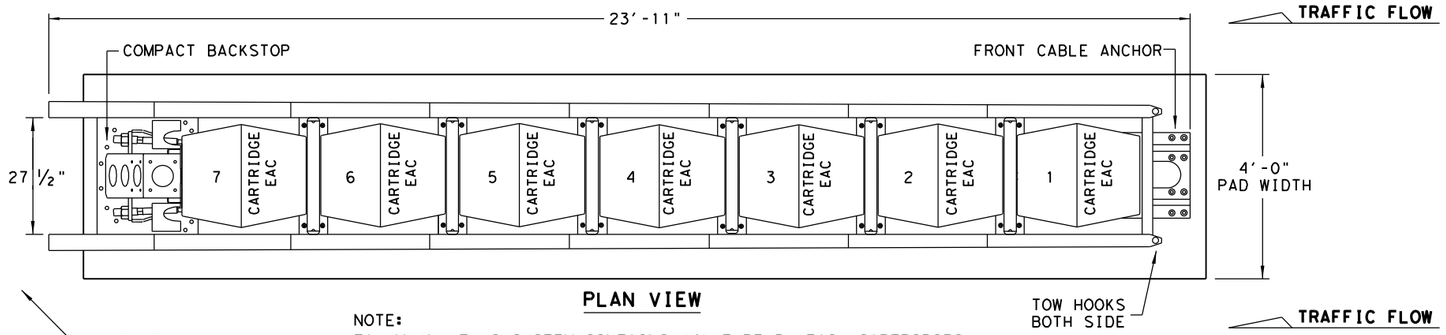

PLAN VIEW

PROTECTS HAZARDS UP TO 30" WIDTH

NOTE:
TAU(M)(N) TL-2 SYSTEM CONTAINS (4) TYPE B (EAC) CARTRIDGES. INSTALLED ON ROADWAYS WITH MAXIMUM SPEEDS OF 45 MPH.

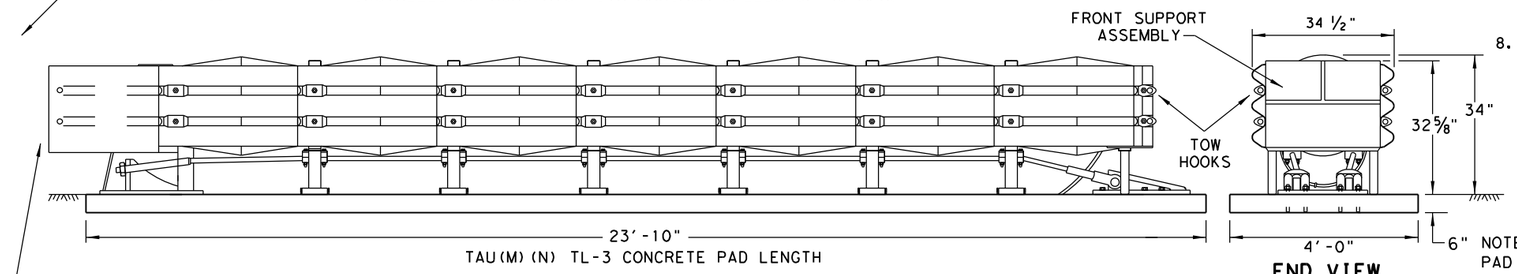

ELEVATION VIEW

END VIEW

NOTE:
PAD THICKNESS VARIES - SEE FOUNDATION OPTIONS

NOTES:
TRANSITIONS AND ATTACHMENTS TO VARIOUS BARRIER SHAPES, RAILINGS AND BI-DIRECTIONAL TRAFFIC FLOWS ARE AVAILABLE. SEE MANUFACTURER'S INSTALLATION INSTRUCTIONS MANUAL FOR ADDITIONAL TRANSITION DETAILS.

NOTE:
CONCRETE FOUNDATION PAD LENGTH VARIES WITH TL-3 AND TL-2 SYSTEMS, SEE SYSTEM & FOUNDATION LENGTH TABLE.

GENERAL NOTES

1. FOR SPECIFIC INFORMATION REGARDING THE INSTALLATION AND TECHNICAL GUIDANCE OF THE SYSTEM, CONTACT: LINDSAY TRANSPORTATION SOLUTIONS (LTS) - BARRIER SYSTEMS, INC. AT (707) 374-6800. 180 RIVER ROAD, RIO VISTA, CA 94571
2. REFER TO THE LATEST (LTS) INSTALLATION INSTRUCTION MANUAL FOR IMPORATANT SAFETY MESSAGES, COMPLETE SYSTEM ASSEMBLY, AND ANCHOR INSTALLATION REQUIREMENTS FOR THE NINE (9) DIFFERENT SITE TRANSITIONS.
3. INSTALLATION DETAILS FOR THE COMPACT BACKSTOP, FRONT CABLE ANCHOR AND FOUNDATION OPTIONS ARE SHOWN ON THE INSTALLATION INSTRUCTION MANUAL FURNISHED TO THE ENGINEER.
4. CONCRETE SHALL BE CLASS "S" WITH A MINIMUM COMPRESSIVE STRENGTH OF 4,000 P.S.I.
5. IF THE CROSS-SLOPES VARIES MORE THAN 2% OVER THE LENGTH OF THE SYSTEM, THE CONCRETE PAD WILL REQUIRE LEVELING. MAXIMUM PERMISSIBLE CROSS-SLOPE IS 8%
6. THE INSTALLATION AREA SHOULD BE FREE FROM CURBS, ELEVATED OBJECTS, OR DEPRESSIONS.
7. THE TAU(M)(N) SYSTEM SHOULD BE APPROXIMATELY PARALLEL WITH THE BARRIER OR CENTER LINE OF MERGING BARRIERS.
8. THIS DRAWING REPRESENTS THE UNIVERSAL TAU(M)(N) TL-3 SYSTEM, A RE-DIRECTIVE NON-GATING CRASH CUSHION THAT CAN PROTECT HAZARDS UP TO 30-INCHES IN WIDTH. ALSO AVAILABLE IN TL-2 CONFIGURATION.

FOUNDATION OPTIONS
6" REINFORCED CONCRETE
8" UNREINFORCED CONCRETE
ASPHALT OVER CONCRETE WITH MINIMUM 6" EMBEDMENT IN CONCRETE
✳ 6" ASPHALT OVER 6" COMPACT SUBBASE
✳ 8" MINIMUM ASPHALT

SYSTEM & FOUNDATION LENGTH TABLE	
SYSTEM LENGTH	FOUNDATION LENGTH
TL-2 = 15'-5"	TL-2 = 15'-4"
TL-3 = 23'-11"	TL-3 = 23'-10"

✳ NOTE:
REQUIRES AN ASPHALT ANCHORAGE PACKAGE: INCLUDES ADDITIONAL BRACES FOR THE FRONT CABLE ANCHOR AND THE COMPACT BACKSTOP, AND ASPHALT HARDWARE KIT. THE TL-3 ASPHALT CONFIGURATION ALSO REQUIRES NESTED SLIDER PANELS AND SHIMS AT THE LAST TWO BAYS. SEE MANUFACTURER'S INSTALLATION INSTRUCTION MANUAL FOR DETAILS.

NOTE:
SEE MANUFACTURER'S INSTALLATION INSTRUCTION MANUAL FOR FOUNDATION SPECIFICATIONS THAT INCLUDE, STONE AGGREGATE MIX, COMPRESSION STRENGTH, STEEL SIZE, ANCHOR SIZE, AND EMBEDMENT DEPTH.

✳✳ NOTE:
ENGINEER OR CONTRACTOR SHALL COORDINATE WITH THE MANUFACTURER FOR THE CORRECT DECAL PER TRAFFIC FLOW, LEFT, RIGHT OR BOTH-SIDES.

BILL OF MATERIALS FOR TAU(M)(N) TL-3 & TL-2 SYSTEMS		QUANTITIES	
PART NUMBER	PART DESCRIPTION	TL-3 SYSTEM	TL-2 SYSTEM
BSI-1708019-00	SLIDING PANEL GALVANIZED TAU(M)(N)	14	8
BSI-1708030-00	END PANEL, THRIE BEAM, GALV, TAU(M)(N)	2	2
BSI-1706001-00	CABLE ASSEMBLY, 7 BAY, TAU(M)(N)	2	-
BSI-1805036-00	CABLE ASSEMBLY, 4 BAY, TAU(M)(N)	-	2
BSI-1708018-00	FRONT CABLE ANCHOR	1	1
BSI-1707034-00	COMPACT BACKSTOP	1	1
B030703	MIDDLE SUPPORT ASSEMBLY	6	3
B030704	FRONT SUPPORT	1	1
B010722	ENERGY ABSORBING CARTRIDGE, TYPE B	7	4
K001005	TAU-II FRONT SUPPORT LEG KIT	1	1
BSI-1709083-KT	TETHER KIT (INCLUDES ALL HARDWARE)	1	1
BSI-1809041-KT	SLIDER KIT (INCLUDES ALL HARDWARE)	7	4
BSI-1808033-KT	CABLE GUIDE KIT (INCLUDES ALL HARDWARE)	6	3
BSI-1809040-KT	TOW HOOK KIT (INCLUDES ALL HARDWARE)	1	1
BSI-1808034-KT	DELINEATION BRACKET KIT(INCLUDES ALL HARDWARE)	1	1
BSI-1808035-KT	END PANEL MOUNT KIT (INCLUDES ALL HARDWARE)	1	1
BSI-1808036-KT	CONCRETE ANCHORING KIT	1	1
✳✳ SEE NOTE	HIGH REFLECTIVE DECAL	1	1
ECN 3883	INSTALLATION AND INSTRUCTIONS MANUAL	1	1

NOTE:
DELINEATION BRACKET ATTACHES TO FRONT SUPPORT ASSEMBLY.

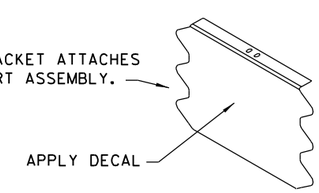

DELINEATION BRACKET

NOTE:
APPLY A HIGH REFLECTIVE DECAL TO THE DELINEATION BRACKET. DELINEATION DECAL ORIENTATION IS SHOWN ON THE CONSTRUCTION PLAN SET AND SHALL BE IN ACCORDANCE WITH THE TEXAS MUTCD FOR (TRAFFIC CONTROL DEVICES). DECALs ARE AVAILABLE FOR TRAFFIC FLOW ON THE LEFT-SIDE, BOTH -SIDES AND RIGHT-SIDE.

TRANSITION OPTIONS	
USE THE COMPACT BACKSTOP	VERTICAL WALL
	CONCRETE TRAFFIC BARRIERS
	W-BEAM GUARDRAIL
	THRIE BEAM GUARDRAIL

NOTE:
FOR BI-DIRECTIONAL TRANSITION PANELS AND BRIDGE RAIL END SHOE DETAILS. SEE MANUFACTURER'S INSTALLATION INSTRUCTIONS MANUAL.

NOTES:
UPGRADE KITS ARE AVAILABLE TO RETROFIT EXISTING NCHRP 350 TAU-II SYSTEMS TO MASH COMPLIANT SYSTEMS. SEE MANUFACTURER'S PRODUCT INFORMATION.

THE TAU(M)(N) UNIDIRECTIONAL SYSTEM IS FREE STANDING AND IS NOT REQUIRED TO BE CONNECTED TO THE HAZARD.

TRANSITIONS TO GUARD FENCE, BRIDGE RAILS AND ROADSIDE BARRIERS SHALL BE IN ACCORDANCE WITH TxDOT'S POLICY.

NOTE:
THIS STANDARD IS A BASIC REPRESENTATION OF THE UNIVERSAL TAU(M)(N)SYSTEM, IT IS NOT INTENDED TO REPLACE THE INSTALLATION INSTRUCTION MANUAL.

REUSABLE

Texas Department of Transportation — Design Division Standard

LINDSAY TRANSPORTATION SOLUTIONS

UNIVERSAL CRASH CUSHION (MASH TL-3 & TL-2) TAU(M)(N)-19

FILE: taumn19.dgn	DN: TxDOT	CK: KM	DW: VP	CK:
©TxDOT: APRIL 2019	CONT	SECT	JOB	HIGHWAY
REVISIONS	0922	33	076	CS
	DIST		COUNTY	SHEET NO.
	LRD		WEBB	92

DATE:
FILE:

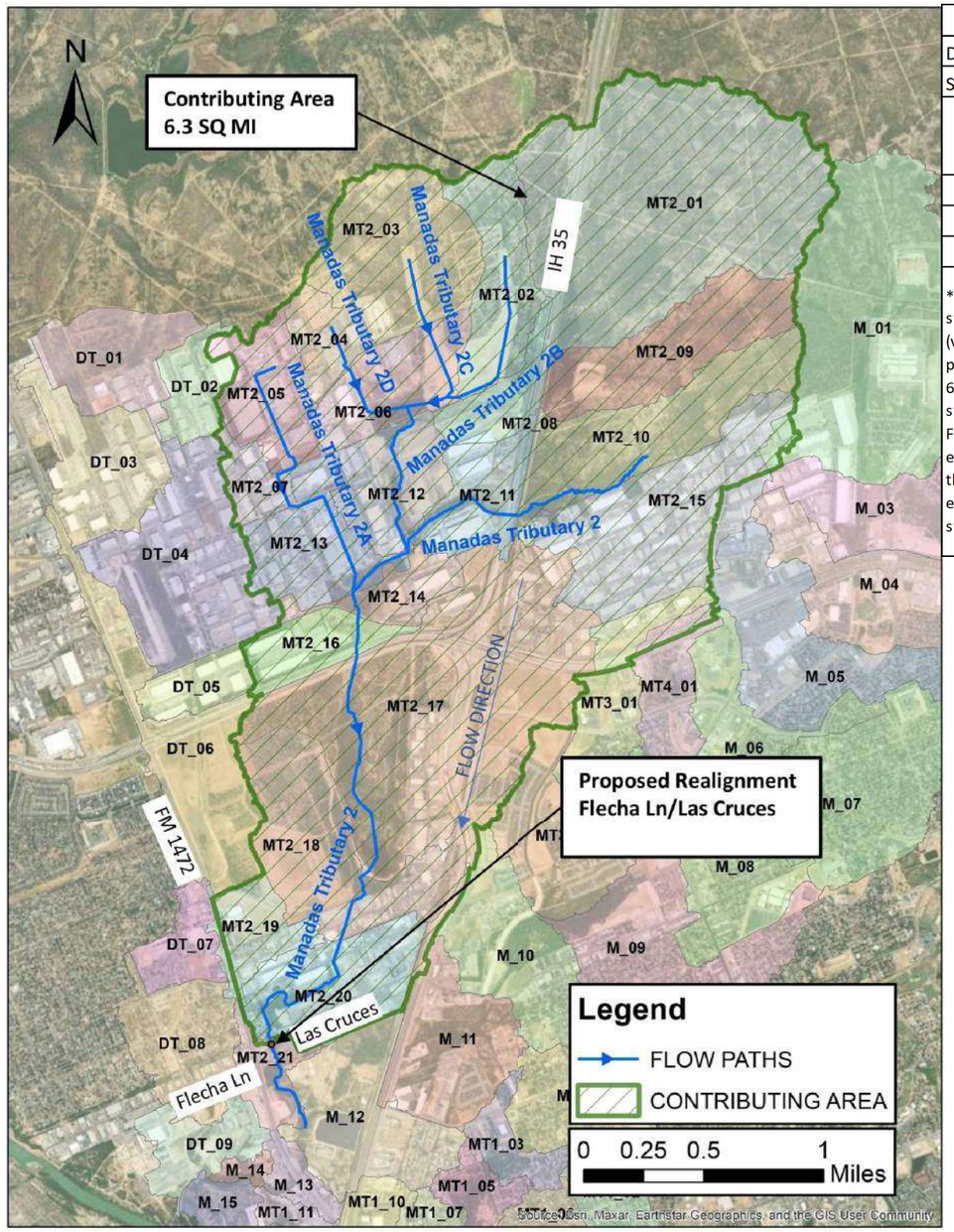

INITIAL ABSTRACTION, CONSTAN LOSS MODEL		
D.A. = 6.2 sq.mi	STORM. DIST. TYPE II	
STORM DUR. 24HR	TIME INTERVAL 2 MIN	
STORM FREQUENCY	TOTAL PRECIPITATION (in)	PEAK DISCHARGE* (cfs)
5	3.8	2100*
25	4.72	4260*
100	6.5	6356*

*Initial peak discharge for the design (25yr) and check (100yr) storm events for each subbasin was estimated through a HEC-HMS (version 4.10) hydrological model. Final peak discharges for the project area were obtained from a HEC-RAS 2D model (version 6.4.1) for the entire Manadas Creek Watershed. This 2D model is still under development and it is part of the TWDB's City Of Laredo Flood Protection Plan. The flow rates from the 2D model were extracted from profile lines that were drawn in the results layer of the 2D model. Peak discharges for the 25-yr and 100-yr storm events were subsequently used as boundary conditions for a 1D steady flow model developed for the project area, specifically.

NOTES:

HYDROLOGIC AND HYDRUALIC DATA BASED ON FEBRUARY 7, 2025 MEMORANDUM "REALIGNMENT OF FLECHA LN/LAS CRUCES ALONG FM1472 (MINES RD), LAREDO, TX" PREPARED BY SCHEIBE CONSULTING LLC. SUBMITTED TO MIGUEL HERNANDEZ, CITY OF LAREDO FLOODPLAIN ADMINISTRATOR FEBRUARY 20, 2025.

LAS CRUCES REALIGNMENT

CULVERT DRAINAGE AREA MAP

SHEET 1 OF 1

KCI TECHNOLOGIES, INC.
2806 W. BITTERS RD. - SUITE 218
SAN ANTONIO, TX 78248 - 210.641.9999
TEXAS REGISTERED ENGINEERING FIRM
TBPE FIRM No. F-10573
www.kci.com

Texas Department of Transportation

FED.RD. DIV.NO.	FEDERAL AID PROJECT NO.		SHEET NO.
6	DMO 2012 (628)		93
STATE	DIST.	COUNTY	
TEXAS	LRD	WEBB	
CONT.	SECT.	JOB	HIGHWAY NO.
0922	33	076	CS

PLOTTED ON: 2/24/2025 @ 7:04:17 PM DESIGN FILENAME: X:\data\txdot\Projects\359700_LasCruces_Flecha\WestLaredoCorridor\IDRAINAGE\areas\LasCruces_CULV_DRN_AREA.dgn

HEC-HMS INITIAL ABSTRACTION CONSTANT LOSS MODEL

D.A. = 6.2 mi			STORM. DIST. TYPE II		STORM DUR. 24 HR			TIME INTERVAL 2 MIN		
SUBBASIN	STORM FREQ	TOTAL PRECIP. (in)	PEAK DISCHARGE (cfs)	DRAINAGE AREA (sq. mi)	CN no.	INITIAL ABSTRACTION (in)	CONSTANT LOSS (in/hr)	IMPERV. (%)	LAG (min)	SHAPE FACTOR
MT2_01	2	3.8	287.7	1.1	66	0.9	0.9	16.2	48.3	150
	5	4.72	363.3							
	10	6.5	471.6							
	25	7.6	572.8							
	50	8.73	762.9							
	100	10.2	921.6							
MT2_02	2	3.8	344.7	0.2	64	0.9	0.9	12.4	24.0	150
	5	4.72	362.3							
	10	6.5	529.1							
	25	7.6	590.2							
	50	8.73	763.9							
	100	10.2	883.3							
MT2_03	2	3.8	177.4	0.4	66	0.9	0.9	18.8	28.8	150
	5	4.72	219.9							
	10	6.5	286.8							
	25	7.6	345.6							
	50	8.73	448.6							
	100	10.2	532.9							
MT2_04	2	3.8	165.8	0.1	85	0.4	0.7	85.7	8.1	150
	5	4.72	178.2							
	10	6.5	238							
	25	7.6	264.4							
	50	8.73	330.4							
	100	10.2	376.8							
MT2_05	2	3.8	212.2	0.2	82	0.8	0.7	83.3	13.0	150
	5	4.72	241.3							
	10	6.5	308.8							
	25	7.6	351.7							
	50	8.73	439.3							
	100	10.2	503.5							
MT2_06	2	3.8	336.5	0.2	74	0.9	0.5	53.0	31.3	150
	5	4.72	423.8							
	10	6.5	548.2							
	25	7.6	664.3							
	50	8.73	921.2							
	100	10.2	1171.5							
MT2_07	2	3.8	271.3	0.1	84	0.8	0.7	91.5	22.2	150
	5	4.72	312.6							
	10	6.5	396.1							
	25	7.6	453.3							
	50	8.73	565.8							
	100	10.2	649.1							
MT2_08	2	3.8	336.1	0.1	66	0.9	0.9	41.2	29.6	150
	5	4.72	423.2							
	10	6.5	547.5							
	25	7.6	663.5							
	50	8.73	879.1							
	100	10.2	1057.9							
MT2_09	2	3.8	114.4	0.3	67	0.9	0.9	10.1	30.6	150
	5	4.72	142.8							
	10	6.5	188							
	25	7.6	228.2							
	50	8.73	298.7							
	100	10.2	357							
MT2_10	2	3.8	623.1	0.4	64	0.9	0.9	12.3	24.5	150
	5	4.72	761.6							
	10	6.5	967.5							
	25	7.6	1149.2							
	50	8.73	1465.2							
	100	10.2	1717.2							

D.A. = 6.2 mi			STORM. DIST. TYPE II		STORM DUR. 24 HR			TIME INTERVAL 2 MIN		
SUBBASIN	STORM FREQ	TOTAL PRECIP. (in)	PEAK DISCHARGE (cfs)	DRAINAGE AREA (sq. mi)	CN no.	INITIAL ABSTRACTION (in)	CONSTANT LOSS (in/hr)	IMPERV. (%)	LAG (min)	SHAPE FACTOR
MT2_11	2	3.8	1170.7	0.2	77	0.9	0.5	74.2	28.6	150
	5	4.72	1443.4							
	10	6.5	1839.8							
	25	7.6	2197.4							
	50	8.73	2829.1							
	100	10.2	3360.3							
MT2_12	2	3.8	1170.7	0.2	64	0.9	0.9	40.9	20.1	150
	5	4.72	1443.4							
	10	6.5	1839.8							
	25	7.6	2197.4							
	50	8.73	2829.1							
	100	10.2	3360.3							
MT2_13	2	3.8	1625.8	0.2	78	0.9	0.5	80.6	10.0	150
	5	4.72	1979.4							
	10	6.5	2522.1							
	25	7.6	2978							
	50	8.73	3801							
	100	10.2	4449.8							
MT2_14	2	3.8	1707.2	0.1	71	0.9	0.9	60.3	14.5	150
	5	4.72	2077.7							
	10	6.5	2648.7							
	25	7.6	3127.8							
	50	8.73	3990.8							
	100	10.2	4670.4							
MT2_15	2	3.8	338.6	0.5	81	0.8	0.7	84.5	25.0	150
	5	4.72	408.8							
	10	6.5	502							
	25	7.6	586.6							
	50	8.73	734.1							
	100	10.2	847.1							
MT2_16	2	3.8	1836.8	0.1	79	0.9	0.5	75.7	10.3	150
	5	4.72	2229.5							
	10	6.5	2845.8							
	25	7.6	3355							
	50	8.73	4274.2							
	100	10.2	4996.7							
MT2_17	2	3.8	716.3	1.1	74	0.9	0.5	49.8	45.1	150
	5	4.72	1126							
	10	6.5	1738.5							
	25	7.6	2320.4							
	50	8.73	3381.8							
	100	10.2	4380.5							
MT2_18	2	3.8	781.7	0.4	65	0.9	0.9	27.9	36.4	150
	5	4.72	1223.7							
	10	6.5	1883							
	25	7.6	2511.3							
	50	8.73	3656.8							
	100	10.2	4727.2							
MT2_19	2	3.8	98.8	0.1	75	0.9	0.5	59.8	20.2	150
	5	4.72	118.7							
	10	6.5	148							
	25	7.6	172.9							
	50	8.73	217.1							
	100	10.2	250.7							
MT2_20	2	3.8	859.3	0.3	79	0.9	0.7	82.8	31.2	150
	5	4.72	1341.4							
	10	6.5	2053.6							
	25	7.6	2735.6							
	50	8.73	3985.5							
	100	10.2	5131.4							

NOTES:

HEC-HMS MODEL (VERSION 4.10) WAS USED TO DEVELOP RUNOFF HYDROGRAPHS FOR EACH 24-HR DURATION SYNTHETIC FREQUENCY STORM EVENT CONSIDERED. THE 24-HR FREQUENCY STORM EVENTS USED THE ALTERNATING BLOCK METHOD WITH 50% INTENSITY POSITION. THE INITIAL-ABSTRACTION AND CONSTANT-LOSS METHOD WAS USED TO SIMULATE HISTORIC STORMS FOR PURPOSES OF CALIBRATING THE MODEL (PLEASE REFERENCE THE FINAL CITY OF LAREDO FPP REPORT FOR ADDITIONAL DETAILS). THE FINAL 24-HR SYNTHETIC STORM ANALYSIS UTILIZED THE SCS CN LOSS METHOD. THE INITIAL MODEL PARAMETERS WERE DEFINED BASED ON THE USGS SCIENTIFIC INVESTIGATIONS REPORT 2007-5243. A STANDARD NRCS UNIT HYDROGRAPH PEAKING FACTOR OF 150 WAS USED AS PART OF THIS ANALYSIS. THE MANADAS CREEK WATERSHED (~15.34 SQ. MI) WAS SPLIT INTO 59 SUBBASINS WHERE THE TIME OF CONCENTRATION OR LAG TIME WAS DETERMINED USING THE TR-55 CALCULATION METHOD BASED ON THE LONGEST FLOW PATH WITHIN EACH SUB-BASIN. COMPOSITE CURVE NUMBERS WERE CALCULATED FOR EACH SUBBASIN USING SOIL INFORMATION DERIVED FROM THE USDA WEB SOIL SURVEY, WHICH CLASSIFIED THE SOIL WITHIN THE DRAINAGE AREA INTO HYDROLOGIC SOIL GROUPS B, C AND D, AND LAND USES DETERMINED USING RECENT AERIAL PHOTOS. BASE CURVE NUMBERS AND PERCENT IMPERVIOUS COVER ASSUMPTIONS FOR EACH LAND USE TYPE WERE ESTIMATED BASED ON THE LAREDO STORM WATER MANAGEMENT GUIDANCE MANUAL. FINAL CURVE NUMBERS WERE ADJUSTED BASED ON THE ANTECEDENT MOISTURE CONDITION (AMC). BASED ON THE SCS TECHNICAL NOTE "HYDROLOGY 210-18-TX5, ESTIMATING RUNOFF FOR CONSERVATION PRACTICES 10/90, THIS STUDY ASSUMED AN AMC I TO REPRESENT AVERAGE CONDITION.

NOTES:

HYDROLOGIC AND HYDRUALIC DATA BASED ON FEBRUARY 7, 2025 MEMORANDUM "REALIGNMENT OF FLECHA LN/LAS CRUCES ALONG FM1472 (MINES RD), LAREDO, TX" PREPARED BY SCHEIBE CONSULTING LLC. SUBMITTED TO MIGUEL HERNANDEZ, CITY OF LAREDO FLOODPLAIN ADMINISTRATOR FEBRUARY 20, 2025.

LAS CRUCES REALIGNMENT

CULVERT DISCHARGE CALCULATIONS

SHEET 1 OF 1

KCI TECHNOLOGIES, INC.
2806 W. BITTERS RD. - SUITE 218
SAN ANTONIO, TX 78248 - 210.641.9999
TEXAS REGISTERED ENGINEERING FIRM
TBPE FIRM No. F-10573
www.kci.com

Texas Department of Transportation

FED.RD. DIV.NO.	FEDERAL AID PROJECT NO.		SHEET NO.
6	DMO 2012 (628)		94
STATE	DIST.	COUNTY	
TEXAS	LRD	WEBB	
CONT.	SECT.	JOB	HIGHWAY NO.
0922	33	076	CS

PLOTTED ON: 2/24/2025 @ 7:04:19 PM DESIGN FILENAME: X:\data\txdot\Projects\359700_LasCruces_Flecha\WestLaredoCorridor\HDRAINAGE\areas\LasCruces_CULV_Discharge_Calculations.dgn

LOCATION MAP

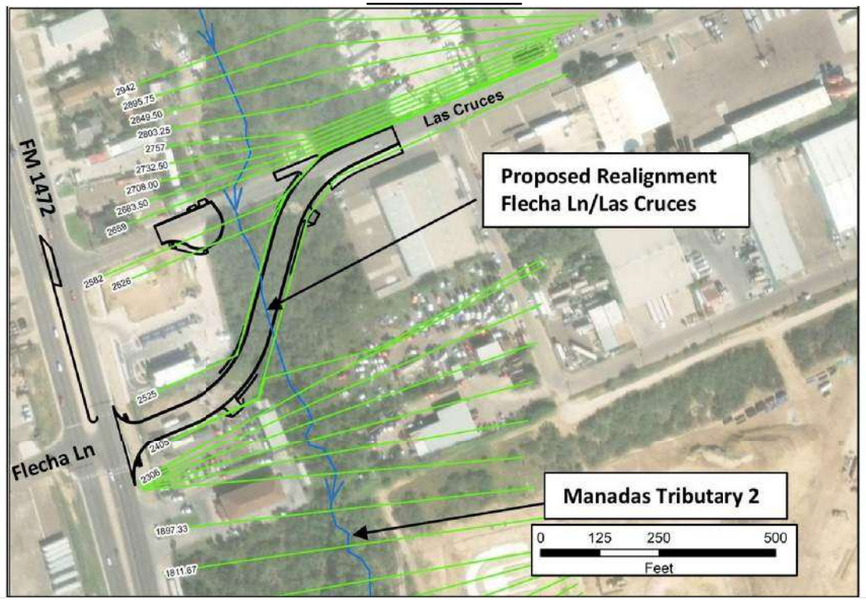

HEC-RAS CROSS-SECTION OUTPUT

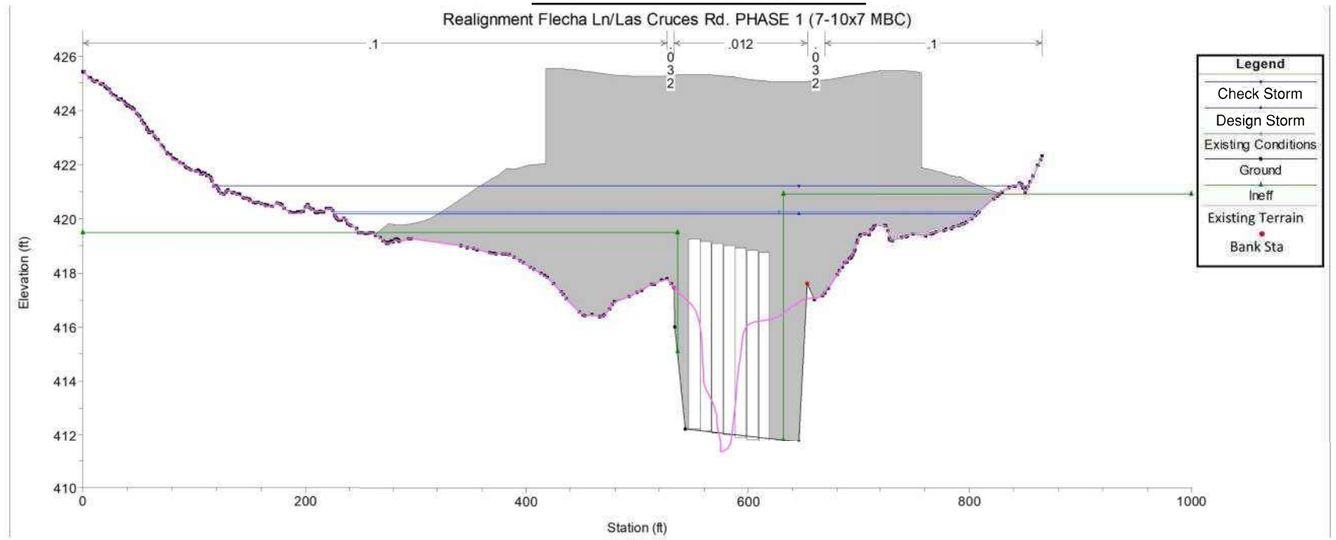

Phase 1 Proposed 7-10'x7' Multiple Box culvert @HEC RAS Sta 25+07

Reach	River Sta	Profile	Q Total	Min Ch El	W.S. Elev	Crit W.S.	E.G. Elev	E.G. Slope	Vel Chnl	Flow Area	Top Width	Froude # Chl	Δ WSE	Δ Vel
			(cfs)	(ft)	(ft)	(ft)	(ft)	(ft/ft)	(ft/s)	(sq ft)	(ft)		(prop-exist)	(prop-exist)
Reach 9	2942	25 YR	4260.82	413.83	422.71	422.71	423.55	0.009594	10.44	1188.85	670.28	0.72	0	0
Reach 9	2942	100 YR	6356.08	413.83	423.57	423.23	424.25	0.008346	10.58	1902.83	766.75	0.69	0	0.01
Reach 9	2895.75	25 YR	4260.82	413.89	422.42	422.24	423.04	0.007056	9.36	1425.53	714.97	0.64	0	0
Reach 9	2895.75	100 YR	6356.08	413.89	423.3	422.76	423.86	0.006554	9.79	2075.33	780.77	0.63	0	0.01
Reach 9	2849.5	25 YR	4260.82	413.55	421.85	421.67	422.7	0.006172	9.34	1232.53	674.41	0.62	0	0
Reach 9	2849.5	100 YR	6356.08	413.55	422.66	422.46	423.52	0.006414	10.24	1817.94	742.32	0.65	0.02	-0.07
Reach 9	2803.25	25 YR	4260.82	413.16	421.72	421.34	422.38	0.005112	7.88	1311.99	676.94	0.56	0	0.01
Reach 9	2803.25	100 YR	6356.08	413.16	422.46	422.08	423.19	0.005614	8.9	1830.84	702.98	0.59	0.02	-0.08
Reach 9	2757	25 YR	4260.82	412.75	421.19	421.19	422.07	0.007073	9.39	1217.47	640.66	0.65	0	0
Reach 9	2757	100 YR	6356.08	412.75	421.89	421.73	422.85	0.007855	10.59	1678.52	675.63	0.7	-0.1	0.41
Reach 9	2732.5	25 YR	4260.82	412.65	420.79	420.95	421.88	0.008224	9.8	1052.65	625.84	0.69	0.11	-0.21
Reach 9	2732.5	100 YR	6356.08	412.65	421.76	421.51	422.68	0.007031	9.98	1680.59	665.66	0.66	-0.14	0.48
Reach 9	2708	25 YR	4260.82	411.77	420.53	420.15	421.31	0.007623	7.93	1039.07	605.36	0.64	-0.46	1.32
Reach 9	2708	100 YR	6356.08	411.77	421.94	421.02	422.44	0.004294	7.08	1954.58	674.01	0.51	-0.09	0.2
Reach 9	2683.5	25 YR	4260.82	411.64	420.57	419.58	421.1	0.004688	6.4	1181.92	614.14	0.51	-0.43	0.9
Reach 9	2683.5	100 YR	6356.08	411.64	421.92	420.44	422.33	0.003158	6.19	2065.03	692.31	0.44	-0.09	0.16
Reach 9	2659	25 YR	4260.82	411.82	420.44	419.61	420.98	0.005611	6.38	1102.49	625.94	0.55	-0.5	1.07
Reach 9	2659	100 YR	6356.08	411.82	421.87	420.34	422.25	0.003143	5.81	2089.52	718.81	0.43	-0.1	0.16
Reach 9	2582	25 YR	4260.82	410.41	420.11		420.73	0.002107	6.94	1284.52	539.97	0.49	-0.82	1.35
Reach 9	2582	100 YR	6356.08	410.41	421.4		422.04	0.001956	7.56	2141.69	732.55	0.48	-0.55	1.46
Reach 9	2526	25 YR	4260.82	410.98	420.15	417.05	420.68	0.00059	6.09	1351.08	531.81	0.42	-0.5	-0.56
Reach 9	2526	100 YR	6356.08	410.98	421.25	418.68	422.01	0.000477	7.39	2073.74	733.76	0.48	-0.54	0.69
Reach 9	2525	25 YR	4260.82	411.75	420.17	416.1	420.64	0.000151	5.52	965.84	580.91	0.35	-0.13	-0.25
Reach 9	2525	100 YR	6356.08	411.75	421.23	417.24	421.97	0.000236	7.03	1531.7	730.58	0.46	-0.24	0.96
Reach 9	2507		Culvert											
Reach 9	2405	25 YR	4260.82	411.15	419.13		419.84	0.000196	6.75	631.16	477.28	0.43	-0.74	1.19
Reach 9	2405	100 YR	6356.08	411.15	419.87	417.14	421.16	0.000371	9.11	837.26	703.44	0.58	-1.2	3.03
Reach 9	2400	25 YR	4260.82	411.11	419.33		419.73	0.000275	5.19	1214.58	436.6	0.38		
Reach 9	2400	100 YR	6356.08	411.11	420.31		420.93	0.000384	6.5	1710.4	570.8	0.44		
Reach 9	2306	25 YR	4260.82	411.58	419.12	416.67	419.68	0.003754	6.1	847.3	387.89	0.47	-0.13	0.19
Reach 9	2306	100 YR	6356.08	411.58	420.15	417.91	420.87	0.004048	7.13	1313.67	509.43	0.5	-0.14	0.22
Reach 9	2241.4	25 YR	4260.82	411.81	418.8	417.01	419.53	0.005663	6.93	751.49	400.84	0.56	-0.1	0.19
Reach 9	2241.4	100 YR	6356.08	411.81	419.9	418.51	420.72	0.005302	7.71	1268.6	542.26	0.56	-0.09	0.19
Reach 9	2176.8	25 YR	4260.82	411.73	418.46	417.22	419.32	0.007108	7.49	654.32	387.55	0.63	0	0
Reach 9	2176.8	100 YR	6356.08	411.73	419.7	418.76	420.55	0.005606	7.84	1295.59	586.8	0.58	0	0
Reach 9	2112.2	25 YR	4260.82	410.52	418.41		419.02	0.004158	6.37	806.52	363.06	0.49	0	0
Reach 9	2112.2	100 YR	6356.08	410.52	419.62		420.32	0.003888	7.08	1363.63	508.68	0.49	0	0
Reach 9	2047.6	25 YR	4260.82	410.55	418.28		418.84	0.003766	6.15	903.47	372.23	0.47	-0.01	0
Reach 9	2047.6	100 YR	6356.08	410.55	419.52	417.34	420.14	0.003471	6.79	1477.45	524.69	0.47	0	0
Reach 9	1983	25 YR	4260.82	407.35	416.92	416.92	418.45	0.018527	10.01	467.76	176.24	0.95	0.01	-0.05
Reach 9	1983	100 YR	6356.08	407.35	417.85	417.85	419.75	0.017704	11.35	685.05	296.68	0.96	0	0

Existing 2-36" RCP Culvert @ Sta 26+50

Reach	River Sta	Profile	Q Total	Min Ch El	W.S. Elev	Crit W.S.	E.G. Elev	E.G. Slope	Vel Chnl	Flow Area	Top Width	Froude # Chl
			(cfs)	(ft)	(ft)	(ft)	(ft)	(ft/ft)	(ft/s)	(sq ft)	(ft)	
Reach 9	2942	25 YR	4260.82	413.83	422.71	422.71	423.55	0.009594	10.44	1188.85	670.28	0.72
Reach 9	2942	100 YR	6356.08	413.83	423.57	423.23	424.25	0.008342	10.57	1903.25	766.78	0.69
Reach 9	2895.75	25 YR	4260.82	413.89	422.42	422.24	423.05	0.007052	9.36	1425.85	714.98	0.64
Reach 9	2895.75	100 YR	6356.08	413.89	423.3	422.76	423.86	0.006549	9.78	2075.95	780.82	0.63
Reach 9	2849.5	25 YR	4260.82	413.55	421.85	421.67	422.7	0.006165	9.34	1233.39	674.8	0.62
Reach 9	2849.5	100 YR	6356.08	413.55	422.64	422.46	423.51	0.006524	10.31	1803.74	741.46	0.65
Reach 9	2803.25	25 YR	4260.82	413.16	421.72	421.34	422.38	0.005101	7.87	1313.35	677.15	0.55
Reach 9	2803.25	100 YR	6356.08	413.16	422.44	422.08	423.18	0.005744	8.98	1812.99	702.76	0.6
Reach 9	2757	25 YR	4260.82	412.75	421.19	421.19	422.07	0.007073	9.39	1217.47	640.66	0.65
Reach 9	2757	100 YR	6356.08	412.75	422.06	421.73	422.87	0.006726	9.94	1791.48	678.48	0.65
Reach 9	2732.5	25 YR	4260.82	412.65	420.48	420.82	421.84	0.010584	10.74	863.56	572.22	0.78
Reach 9	2732.5	100 YR	6356.08	412.65	421.97		422.72	0.005855	9.28	1815.45	667.1	0.6
Reach 9	2708	25 YR	4260.82	411.77	420.8	420.21	421.52	0.005043	7.78	1207	624.69	0.55
Reach 9	2708	100 YR	6356.08	411.77	421.99	421.17	422.57	0.00397	7.75	1990.4	674.64	0.5
Reach 9	2683.5	25 YR	4260.82	411.64	420.88	419.63	421.35	0.003396	6.24	1376.97	629	0.45
Reach 9	2683.5	100 YR	6356.08	411.64	422	420.75	422.46	0.003036	6.62	2126.12	695.9	0.44
Reach 9	2659	25 YR	4260.82	411.82	420.87	419.61	421.24	0.003592	5.45	1385.4	682.91	0.45
Reach 9	2659	100 YR	6356.08	411.82	422.02	420.34	422.36	0.002794	5.57	2193.16	729.78	0.41
Reach 9	2650		Culvert									
Reach 9	2582	25 YR	4260.82	410.41	420.88		421.21	0.002593	5.57	1692.85	696.36	0.39
Reach 9	2582	100 YR	6356.08	410.41	422		422.32	0.002345	5.91	2518.51	777.3	0.39
Reach 9	2526	25 YR	4260.82	410.88	420.53	418.69	421.07	0.003549	7.11	1421.96	630.89	0.46
Reach 9	2526	100 YR	6356.08	410.88	421.7	420.41	422.19	0.003194	7.44	2246.16	748.55	0.45
Reach 9	2525.67	25 YR	4260.82	411.7	420.46	419.54	420.87	0.006005	6.53	1351.3	619.01	0.56
Reach 9	2525.67	100 YR	6356.08	411.7	421.66	420.29	422.01	0.004199	6.46	2225.36	793.69	0.49
Reach 9	2525.33	25 YR	4260.82	411.35	420.3	419	420.67	0.004164	6.04	1467.91	636.5	0.48
Reach 9	2525.33	100 YR	6356.08	411.35	421.54	419.99	421.87	0.003168	6.13	2476.76	912.06	0.44
Reach 9	2525	25 YR	4260.82	411.55	420.22		420.53	0.002697	5.39	1786.59	824.07	0.39
Reach 9	2525	100 YR	6356.08	411.55	421.5		421.75	0.001955	5.33	3023.21	1047.84	0.35
Reach 9	2405	25 YR	4260.82	410.7	419.91		420.26	0.001988	5.48	1639.42	1002.28	0.36
Reach 9	2405	100 YR	6356.08	410.7	421.23		421.54	0.0017	5.66	2994.63	1101.8	0.34
Reach 9	2372	25 YR	4260.82	411.75	419.78	417.17	420.15	0.002228	5.56	1496.83	578.86	0.38
Reach 9	2372	100 YR	6356.08	411.75	421.03	417.82	421.43	0.002149	6.12	2280.73	784.54	0.38
Reach 9	2339	25 YR	4260.82	411.39	419.7	417.38	420.01	0.002343	5.27	1513.38	531.3	0.38
Reach 9	2339	100 YR	6356.08	411.39	420.95	418.12	421.29	0.002236	5.83	2232.36	665.2	0.38
Reach 9	2306	25 YR	4260.82	411.58	419.23	416.64	419.84	0.003146	6.43	889.99	400.92	0.44
Reach 9	2306	100 YR	6356.08	411.58	420.31	417.88	421.09	0.003541	7.56	1398.46	526.26	0.48
Reach 9	2241.4	25 YR	4260.82	411.81	418.9	416.98	419.67	0.004612	7.18	789.9	412.79	0.53
Reach 9	2241.4	100 YR	6356.08	411.81	420.05	418.85	420.92	0.004543	8.04	1353.56	553.49	0.54
Reach 9	2176.8	25 YR	4260.82	411.73	418.35	417.23	419.4	0.007543	8.34	621.44	376.4	0.66
Reach 9	2176.8	100 YR	6356.08	411.73	419.74	418.93	420.7	0.00569	8.53	1316.33	587.84	0.6
Reach 9	2112.2	25 YR	4260.82	410.52	418.35		419.06	0.004258	6.94	785.62	355.2	0.51
Reach 9	2112.2	100 YR	6356.08	410.52	419.67		420.46	0.003932	7.64	1391.95	511.83	0.5
Reach 9	2047.6	25 YR	4260.82	410.55	418.22		418.87	0.004036	6.73	880.65	361.78	0.49
Reach 9	2047.6	100 YR	6356.08	410.55	419.59	417.59	420.28	0.003573	7.3	1512.4	526.7	0.48
Reach 9	1983	25 YR	4260.82	407.35	416.75	416.75	418.46	0.018036	10.56	439.81	158.87	0.95
Reach 9	1983	100 YR	6356.08	407.35	418.14	418.14	419.92	0.013113	11.05	779.35	349.83	0.85

NOTES:

HYDROLOGIC AND HYDRUALIC DATA BASED ON FEBRUARY 7, 2025 MEMORANDUM "REALIGNMENT OF FLECHA LN/LAS CRUCES ALONG FM1472 (MINES RD), LAREDO, TX" PREPARED BY SCHEIBE CONSULTING LLC, SUBMITTED TO MIGUEL HERNANDEZ, CITY OF LAREDO FLOODPLAIN ADMINISTRATOR FEBRUARY 20, 2025.

THE PROPOSED BRIDGE IS LOCATED WITHIN A FEMA DESIGNATED ZONE "AE " FLOODPLAIN AS PER FEMA FLOOD INSURANCE RATE MAP PANEL #48479C1185C WITH EFFECTIVE DATE OF APRIL 2, 2008.

DIGITAL ELEVATION MODEL DERIVED FROM TNRIS WEST TEXAS LiDAR DATA FROM 2019. NORTH AMERICAN VERTICAL DATUM OF 1988 (NAVD88). SIMULATED WATER SURFACE ELEVATION DUE TO PROPOSED CONDITIONS MET THE 1FT FREEBOARD REQUIREMENT, AS STATED IN THE CITY OF LAREDO STORM WATER MANAGEMENT GUIDANCE MANUAL.

CULVERT DESIGNED FOR Q25 (CHECKED FOR Q100); CULVERT CALCULATIONS PERFORMED IN HEC-RAS VERSION 6.4.1, 1D STEADY-STATE FLOW ANALYSIS. FLOW SERIES BOUNDARY CONDITIONS FOR Q25 WERE 4260.82 CFS(US) AND 4187.31 CFS(DS), FOR Q100 WERE 6356.08 CFS(US) AND 6059.5 CFS(DS). BOUNDARY CONDITIONS DISCHARGE DATA OBTAINED FROM THE TWDB'S CITY OF LAREDO FLOOD PROTECTION PLAN HEC-RAS 2D MODEL (VERSION 6.4.1) (STILL UNDER DEVELOPMENT). EXISTING CROSSING NOT IN THE NBI INVENTORY, PROPOSED NBI# PSN: 22-240-0T021-06-100.

LAS CRUCES REALIGNMENT

CULVERT HYDRAULIC DATA SHEET

SHEET 1 OF 3

KCI TECHNOLOGIES, INC.
2806 W. BITTERS RD. - SUITE 218
SAN ANTONIO, TX 78248 - 210.641.9999
TEXAS REGISTERED ENGINEERING FIRM
TBPE FIRM No. F-10573
www.kci.com

Texas Department of Transportation

FED.RD. DIV.NO.	FEDERAL AID PROJECT NO.		SHEET NO.
6	DMO 2012 (628)		95
STATE	DIST.	COUNTY	
TEXAS	LRD	WEBB	
CONT.	SECT.	JOB	HIGHWAY NO.
0922	33	076	CS

PLOTTED ON: 2/25/2025 @ 9:26:06 AM DESIGN FILENAME: X:\data\txdot\Projects\359700_LasCruces_Flecha\WestLaredoCorridor\DRAINAGE\culverts\LasCruces_CULV_HYD_DATA.dgn

25yr-Phase 1 Proposed 7-10'x7' Multiple Box culvert @HEC RAS Sta 25+07			
Q Culv Group (cfs)	581.44	Culv Full Len (ft)	130
# Barrels	1	Culv Vel US (ft/s)	8.31
Q Barrel (cfs)	581.44	Culv Vel DS (ft/s)	8.31
E.G. US. (ft)	420.64	Culv Inv El Up (ft)	412.25
W.S. US. (ft)	420.17	Culv Inv El Dn (ft)	411.65
E.G. DS (ft)	419.84	Culv Frctn Ls (ft)	0.22
W.S. DS (ft)	419.13	Culv Exit Loss (ft)	0.36
Delta EG (ft)	0.8	Culv Entr Loss (ft)	0.21
Delta WS (ft)	1.04	Q Weir (cfs)	234.39
E.G. IC (ft)	420.43	Weir Sta Lft (ft)	151.99
E.G. OC (ft)	420.64	Weir Sta Rgt (ft)	338.06
Culvert Control	Outlet	Weir Submerg	0
Culv WS Inlet (ft)	419.25	Weir Max Depth (ft)	1.14
Culv WS Outlet (ft)	418.65	Weir Avg Depth (ft)	0.56
Culv Nml Depth (ft)		Weir Flow Area (sq ft)	104.62
Culv Crt Depth (ft)	4.72	Min El Weir Flow (ft)	419.51

NOTES:

HYDROLOGIC AND HYDRUALIC DATA BASED ON FEBRUARY 7, 2025 MEMORANDUM "REALIGNMENT OF FLECHA LN/LAS CRUCES ALONG FM1472 (MINES RD), LAREDO, TX" PREPARED BY SCHEIBE CONSULTING LLC. SUBMITTED TO MIGUEL HERNANDEZ, CITY OF LAREDO FLOODPLAIN ADMINISTRATOR FEBRUARY 20, 2025.

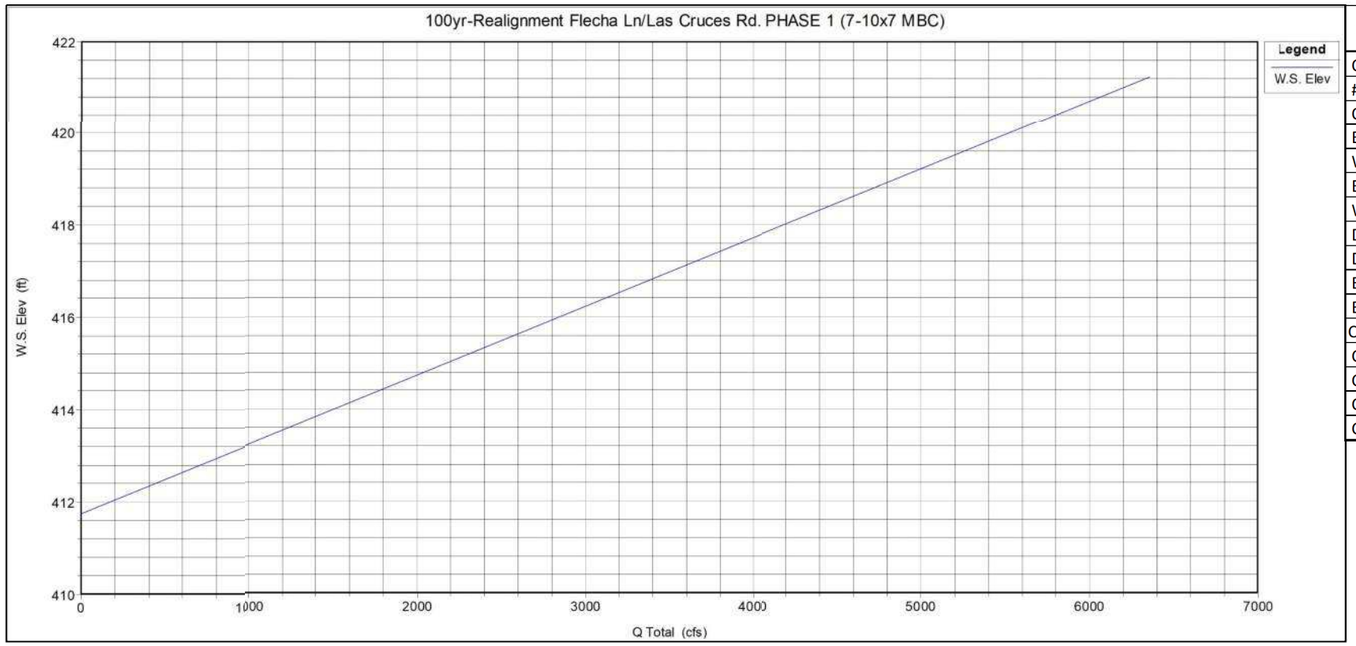

100yr-Phase 1 Proposed 7-10'x7' Multiple Box culvert @HEC RAS Sta 25+07			
Q Culv Group (cfs)	686.48	Culv Full Len (ft)	130
# Barrels	1	Culv Vel US (ft/s)	9.81
Q Barrel (cfs)	686.48	Culv Vel DS (ft/s)	9.81
E.G. US. (ft)	421.98	Culv Inv El Up (ft)	412.25
W.S. US. (ft)	421.23	Culv Inv El Dn (ft)	411.65
E.G. DS (ft)	421.16	Culv Frctn Ls (ft)	0.31
W.S. DS (ft)	419.87	Culv Exit Loss (ft)	0.21
Delta EG (ft)	0.82	Culv Entr Loss (ft)	0.3
Delta WS (ft)	1.36	Q Weir (cfs)	1604.01
E.G. IC (ft)	421.37	Weir Sta Lft (ft)	91.04
E.G. OC (ft)	421.98	Weir Sta Rgt (ft)	861.86
Culvert Control	Outlet	Weir Submerg	0.03
Culv WS Inlet (ft)	419.25	Weir Max Depth (ft)	2.48
Culv WS Outlet (ft)	418.65	Weir Avg Depth (ft)	1.18
Culv Nml Depth (ft)		Weir Flow Area (sq ft)	492.85
Culv Crt Depth (ft)	5.27	Min El Weir Flow (ft)	419.51

LAS CRUCES REALIGNMENT

CULVERT HYDRAULIC DATA SHEET

SHEET 2 OF 3

KCI TECHNOLOGIES, INC.
2806 W. BITTERS RD. - SUITE 218
SAN ANTONIO, TX 78248 - 210.641.9999
TEXAS REGISTERED ENGINEERING FIRM
TBPE FIRM No. F-10573
www.kci.com

Texas Department of Transportation

FED.RD. DIV.NO.	FEDERAL AID PROJECT NO.		SHEET NO.
6	DMO 2012 (628)		96
STATE	DIST.	COUNTY	
TEXAS	LRD	WEBB	
CONT.	SECT.	JOB	HIGHWAY NO.
0922	33	076	CS

PLOTTED ON: 2/24/2025 @ 7:04:26 PM DESIGN FILENAME: X:\data\txdot\Projects\359700_LasCruces_Flecha\WestLaredoCorridor\DRAINAGE\culverts\LasCruces_CULV_HYD_DATA_02.dgn

25YR (UPSTREAM) - ELEVATION VS VELOCITY CURVE

25YR (DOWNSTREAM) - ELEVATION VS VELOCITY CURVE

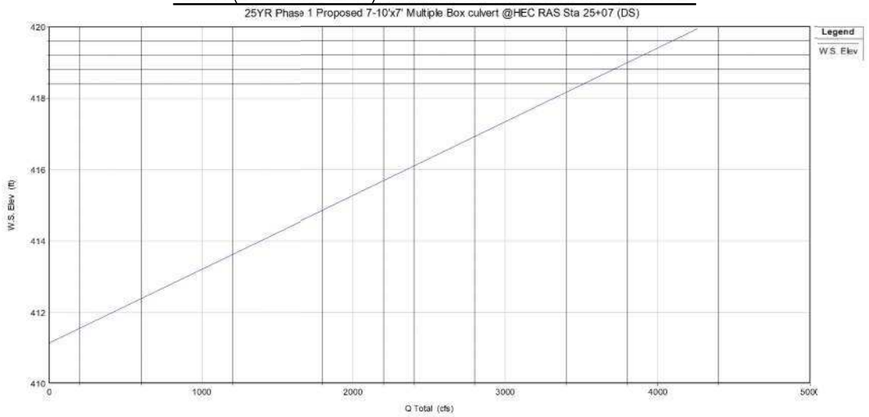

100YR (UPSTREAM) - ELEVATION VS VELOCITY CURVE

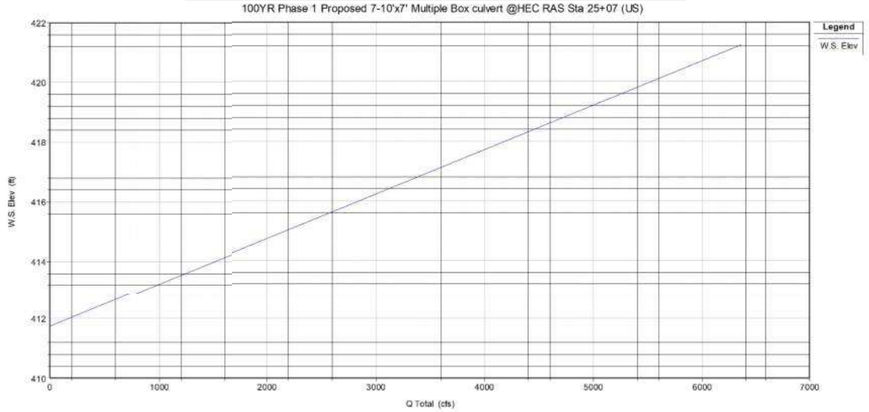

100YR (UPSTREAM) - ELEVATION VS VELOCITY CURVE

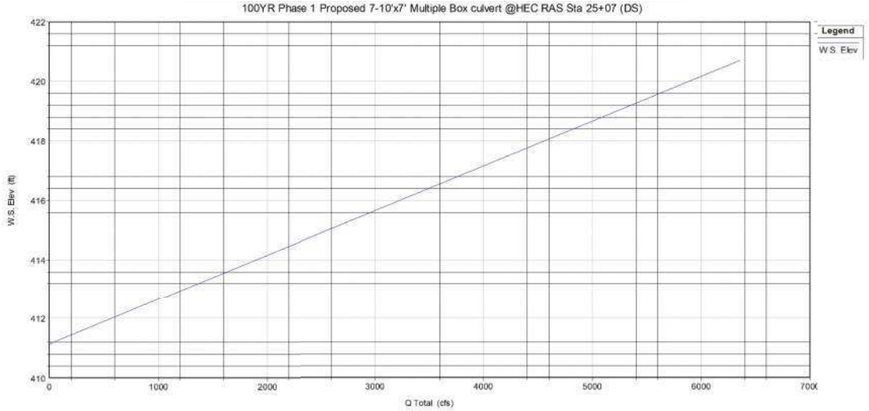

NOTES:

HYDROLOGIC AND HYDRUALIC DATA BASED ON FEBRUARY 7, 2025 MEMORANDUM "REALIGNMENT OF FLECHA LN/LAS CRUCES ALONG FM1472 (MINES RD), LAREDO, TX" PREPARED BY SCHEIBE CONSULTING LLC. SUBMITTED TO MIGUEL HERNANDEZ, CITY OF LAREDO FLOODPLAIN ADMINISTRATOR FEBRUARY 20, 2025.

LAS CRUCES REALIGNMENT

CULVERT HYDRAULIC DATA SHEET

SHEET 3 OF 3

KCI TECHNOLOGIES, INC.
2806 W. BITTERS RD. - SUITE 218
SAN ANTONIO, TX 78248 - 210.641.9999
TEXAS REGISTERED ENGINEERING FIRM
TBPE FIRM No. F-10573
www.kci.com

Texas Department of Transportation

FED.RD. DIV.NO.	FEDERAL AID PROJECT NO.		SHEET NO.
6	DMO 2012 (628)		97
STATE	DIST.	COUNTY	
TEXAS	LRD	WEBB	
CONT.	SECT.	JOB	HIGHWAY NO.
0922	33	076	CS

PLOTTED ON: 2/24/2025 @ 7:04:27 PM DESIGN FILENAME: X:\data\txdot\Projects\359700_LasCruces_Flecha\WestLaredoCorridor\DRAINAGE\culverts\LasCruces_CULV_HYD_DATA_03.dgn

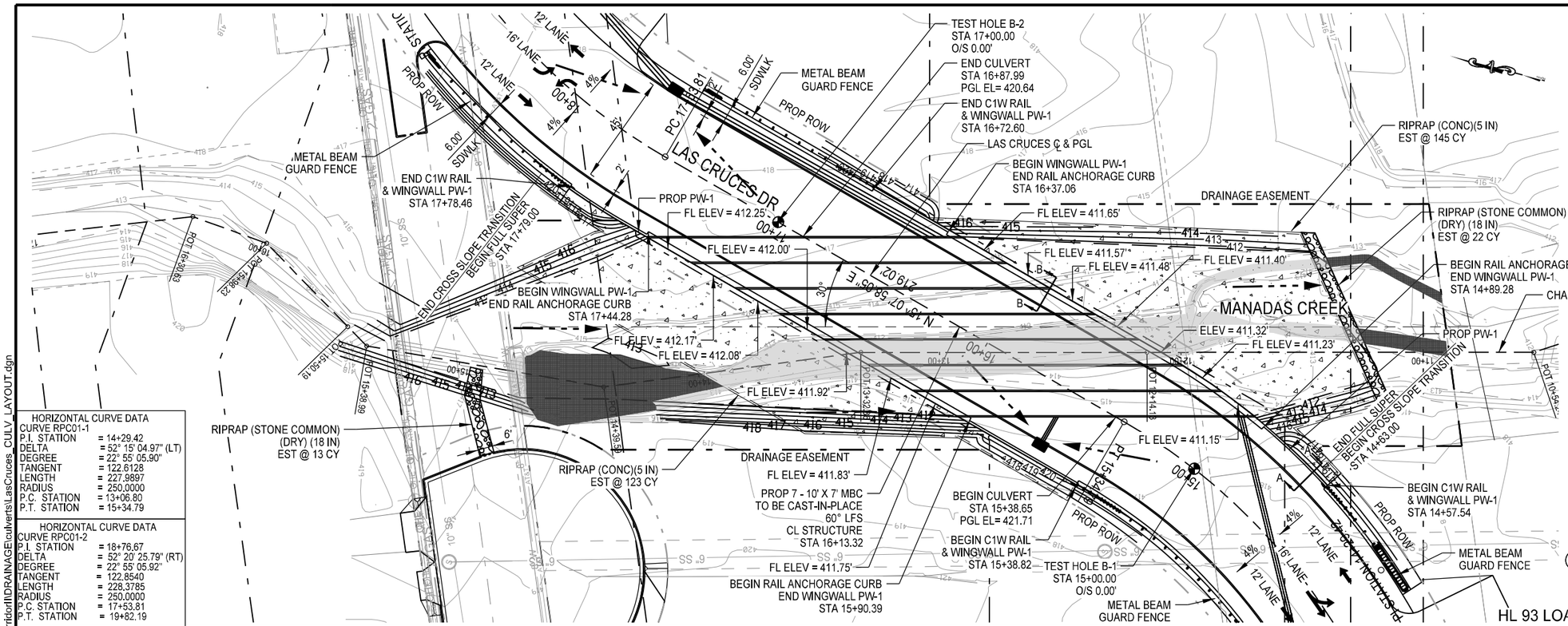

PLAN VIEW LEGEND

- LIMITS OF GRADING
- DRAINAGE EASEMENT
- TOE OF SLOPE
- 5" CONCRETE RIPRAP
- STONE RIPRAP
- JURISDICTIONAL WATERS WILL BE DISTURBED
- JURISDICTIONAL WATERS TO BE PRESERVED. DO NOT DISTURB THIS AREA
- BORING LOCATION

FUNCTIONAL CLASS OF ROADWAY : MAJOR COLLECTOR
EXISTING ADT: 7,799 (2024)
PROJECTED ADT : 11,589 (2044)
DESIGN SPEED : 30 MPH
NBI # : PSN: 22-240-0T021-06-100

NOTE:
SEE STANDARDS COMBINATION RAIL (TYPE C1W) AND RAIL ANCHORAGE CURB (RAC) FOR RAIL AND CURB REBAR AND DIMENSION INFORMATION. SLOT DRAINS REQUIRED.

ALL STATIONS AND OFFSETS ARE TAKEN FROM THE PROPOSED LAS CRUCES ALIGNMENT UNLESS OTHERWISE NOTED.

EXIST. WS EL.=421.47 FT, PROP. WS EL.=421.23 FT, HEADWATER CHANGE IS -0.24 FT, WHICH IS WITHIN THE MAXIMUM 1 FT INCREASE IN HEADWATER ELEVATION FOR 1% AEP EVENT AS SPECIFIED BY THE 2019 TxDOT HYDRAULIC DESIGN MANUAL.

(*) PREPARE CULVERT SUBGRADE WITH 6" GRANULAR SELECT FILL PER TXDOT 2024 ITEM 247, TYPE A OR B, GRADE 1 OR 2 CRUSHED LIMESTONE, GRAVEL BASE MATERIAL, OR CRUSHED CONCRETE. (NSPI)

HORIZONTAL CURVE DATA

CURVE RPC01-1	
P.I. STATION	= 14+29.42
DELTA	= 52° 15' 04.97" (LT)
DEGREE	= 22° 55' 05.90"
TANGENT	= 122.6128
LENGTH	= 227.9897
RADIUS	= 250.0000
P.C. STATION	= 13+06.80
P.T. STATION	= 15+34.79

HORIZONTAL CURVE DATA

CURVE RPC01-2	
P.I. STATION	= 18+76.67
DELTA	= 52° 20' 25.79" (RT)
DEGREE	= 22° 55' 05.92"
TANGENT	= 122.8540
LENGTH	= 228.3785
RADIUS	= 250.0000
P.C. STATION	= 17+53.81
P.T. STATION	= 19+82.19

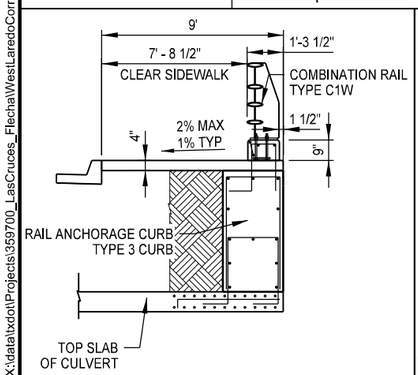

RAIL AT CULVERT
B - B

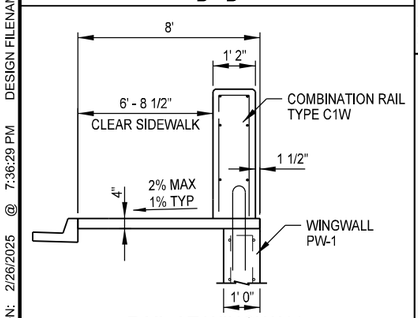

RAIL AT WINGWALL
A - A

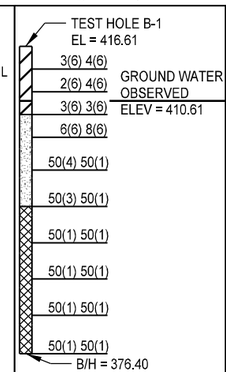

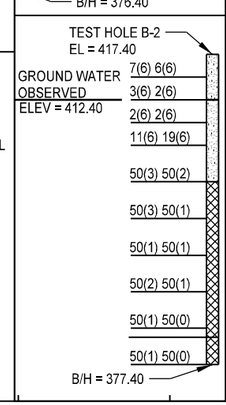

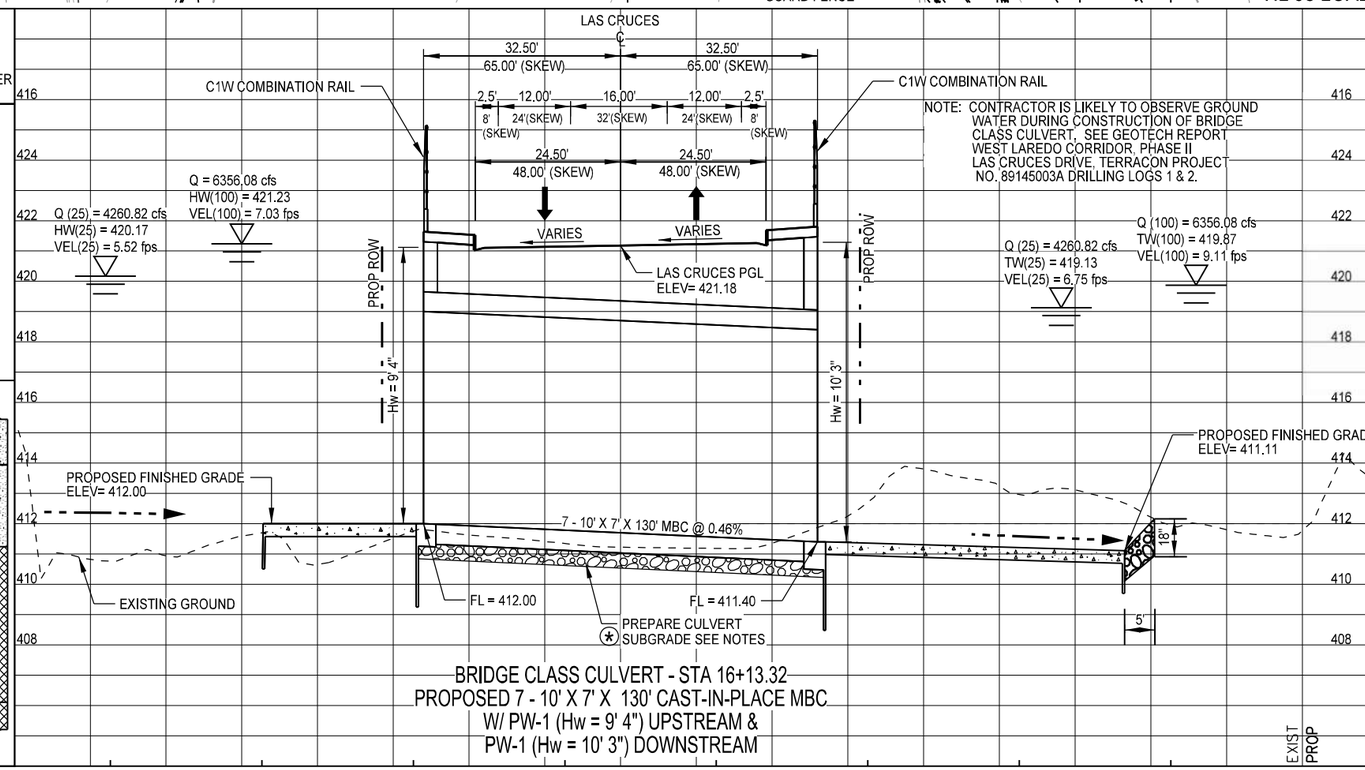

BRIDGE CLASS CULVERT - STA 16+13.32
PROPOSED 7 - 10' X 7' X 130' CAST-IN-PLACE MBC
W/ PW-1 (Hw = 9' 4") UPSTREAM &
PW-1 (Hw = 10' 3") DOWNSTREAM

GRAPHIC SCALE
(IN FEET)
25 12.5 0 25 50 75
1" = 50'
Vert: 1" = 5'

STATE OF TEXAS
KYLE GASS
94833
LICENSED PROFESSIONAL ENGINEER

KYLE GASS, P.E.
7/31/2025

LAS CRUCES REALIGNMENT

BRIDGE CLASS
CULVERT LAYOUT
STATION 16+13.32

SHEET 1 OF 1

KCI TECHNOLOGIES, INC.
2806 W. BITTERS RD. - SUITE 218
SAN ANTONIO, TX 78248 - 210.641.9999
TEXAS REGISTERED ENGINEERING FIRM
TBPE FIRM No. F-10573
www.kci.com

Texas Department of Transportation

FED.RD. DIV.NO.	FEDERAL AID PROJECT NO.		SHEET NO.
6	DMO 2012 (628)		98
STATE	DIST.	COUNTY	
TEXAS	LRD	WEBB	
CONT.	SECT.	JOB	HIGHWAY NO.
0922	33	076	CS

PLOTTED ON: 2/26/2025 @ 7:36:29 PM DESIGN FILENAME: X:\data\txdot\Projects\359700_LasCruces_FlechaWestLaredoCorridorII\DRAINAGE\culverts\LasCruces_CULV_LAYOUT.dgn

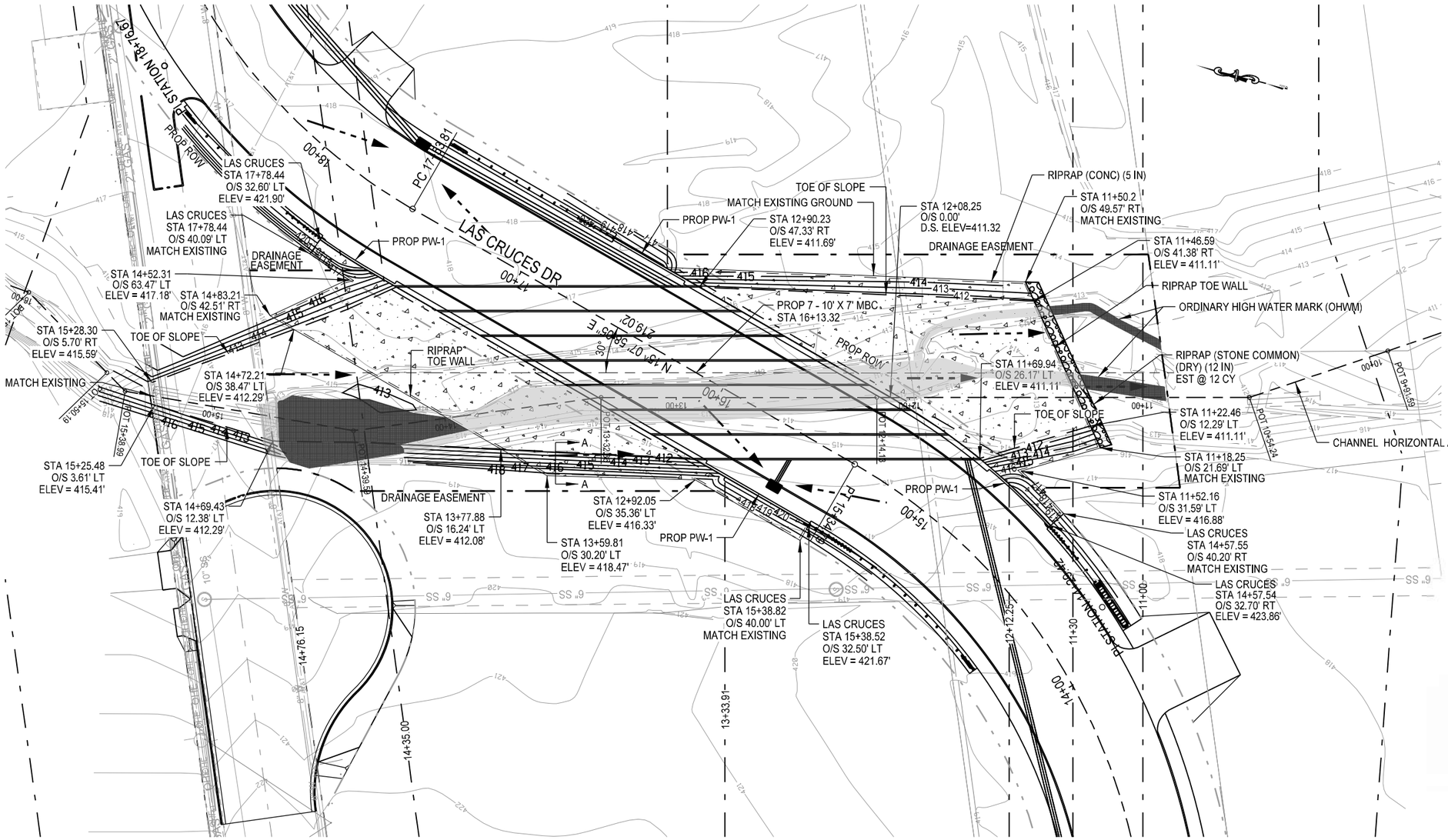

PLAN VIEW LEGEND

- JURISDICTIONAL WATERS WILL BE DISTURBED
- JURISDICTIONAL WATERS TO BE PRESERVED. DO NOT DISTURB THIS AREA
- CHANNEL PATTERN LINES
- DIRECTIONAL DRAINAGE FLOW ARROW

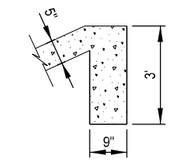

TOE WALL DETAIL
SECTION A-A

CHANNEL HORIZONTAL ALIGNMENT ALL STATIONS AND OFFSETS ARE TAKEN FROM THE CHANNEL ALIGNMENT UNLESS OTHERWISE NOTED.

GRAPHIC SCALE
(IN FEET)
25 12.5 0 25 50 75
1" = 50'

STATE OF TEXAS
KYLE GASS
94833
LICENSED
PROFESSIONAL ENGINEER

KYLE GASS, P.E.
7/31/2025

LAS CRUCES REALIGNMENT

CHANNEL GRADING LAYOUT

SHEET 1 OF 1

KCI TECHNOLOGIES, INC.
2806 W. BITTERS RD. - SUITE 218
SAN ANTONIO, TX 78248 - 210.641.9999
TEXAS REGISTERED ENGINEERING FIRM
TBPE FIRM No. F-10573
www.kci.com

Texas Department of Transportation

FED.RD. DIV.NO.	FEDERAL AID PROJECT NO.		SHEET NO.
6	DMO 2012 (628)		99
STATE	DIST.	COUNTY	
TEXAS	LRD	WEBB	
CONT.	SECT.	JOB	HIGHWAY NO.
0922	33	076	CS

PLOTTED ON: 2/26/2025 @ 7:36:38 PM DESIGN FILENAME: X:\data\txdot\Projects\359700_LasCruces_FlechaWestLaredoCorridor\DRAINAGE\LasCruces_CHANNEL_GRADING.dgn

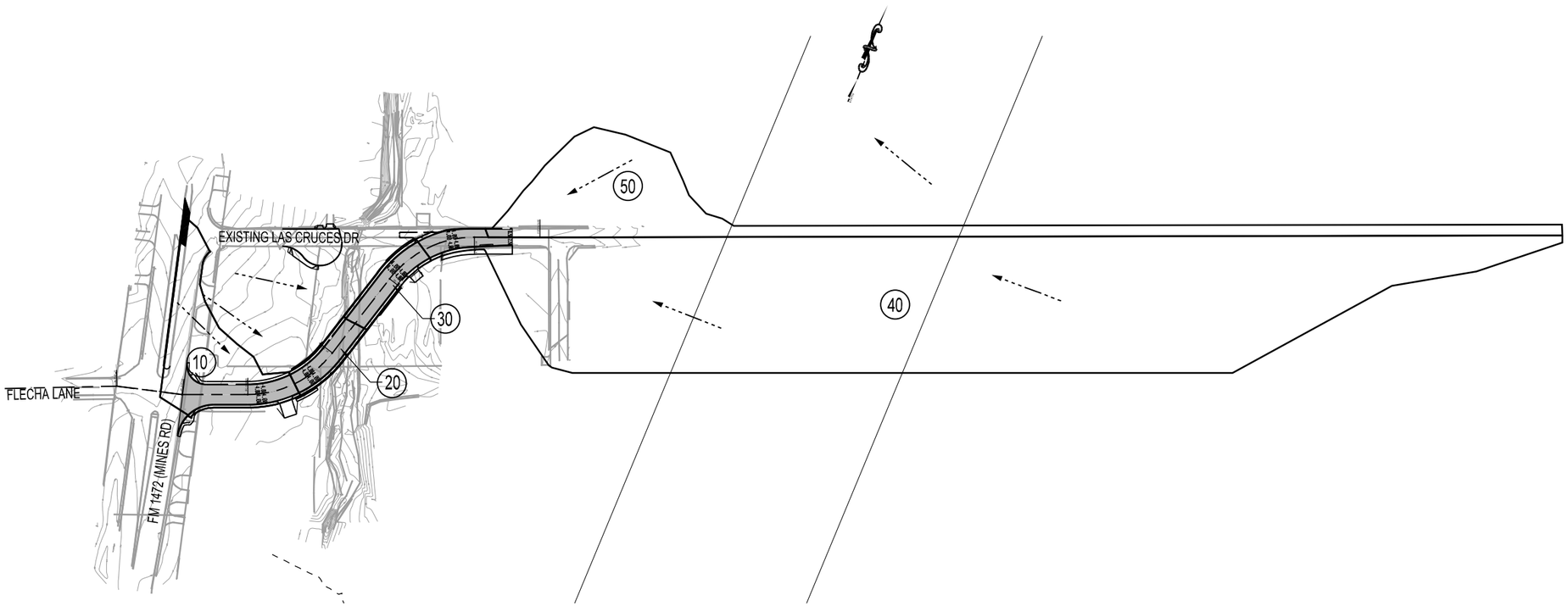

DRAINAGE AREA MAP LEGEND

- WATERSHED BOUNDARY
- DRAINAGE FLOW DIRECTION
- (xXX) DRAINAGE AREA

GRAPHIC SCALE
(IN FEET)
150 75 0 150 300 450
1" = 300'

STATE OF TEXAS
KYLE GASS
94833
LICENSED
PROFESSIONAL ENGINEER

KYLE GASS, P.E.
7/31/2025

LAS CRUCES REALIGNMENT

INTERIOR DRAINAGE AREA MAP

SHEET 1 OF 1

KCI TECHNOLOGIES, INC.
2806 W. BITTERS RD. - SUITE 218
SAN ANTONIO, TX 78248 - 210.641.9999
TEXAS REGISTERED ENGINEERING FIRM
TBPE FIRM No. F-10573
www.kci.com

Texas Department of Transportation

FED.RD. DIV.NO.	FEDERAL AID PROJECT NO.		SHEET NO.
6	DMO 2012 (628)		100
STATE	DIST.	COUNTY	
TEXAS	LRD	WEBB	
CONT.	SECT.	JOB	HIGHWAY NO.
0922	33	076	CS

DRAINAGE AREA CALCULATIONS FOR INTERIOR DRAINAGE AREAS WERE PERFORMED USING GEOPAK DRAINAGE.

PLOTTED ON: 2/27/2025 @ 9:09:08 AM DESIGN FILENAME: X:\data\txdot\Projects\359700_LasCruces_Flecha\WestLaredoCorridor\DRAINAGE\areas\LasCruces_INT_DRN_AREAS_01.dgn

LAS CRUCES FLECHA STORM DRAIN SYSTEM CONVEYANCE CALCULATIONS

ID	Upstream Node	Downstream Node	Actual Length	Hydraulic Length	Manning's N Value	Slope	Rise	Span	Friction Slope	Soffit Upstream	Soffit Downstream	Invert Upstream	Invert Downstream	Uniform Depth	Uniform Velocity	Actual Vel Downstream	Actual Depth Upstream	Actual Depth Downstream	HGL Upstream	HGL Downstream	EGL Upstream	EGL Downstream	Cumul. Tc Tc	Cumulative Discharge	Cumulative Area	Cumulative C Value	Cumulative Intensity	Junction Loss	Discharge (cfs)	Capacity (cfs)
35-30	35	30	110.83	115.83	0.01	0.27	4	n/a	0	416.61	416.31	412.61	412.31	2.52	7.02	4.67	4	4	418.01	417.85	418.35	418.2	21.34	58.65	18.23	0.7	4.6	0	58.65	87.09
50-40	50	40	59.86	62.61	0.01	0.42	2	n/a	0	416.09	415.84	414.09	413.84	1.29	5.47	3.73	2	2	418.37	418.22	418.58	418.56	20.67	11.73	3.23	0.79	4.6	0	11.73	17.04
10OUT1	10	OUT1	228.57	231.07	0.01	0.35	2	n/a	0	417.83	417.03	415.83	415.03	0.85	4.26	1.73	1.99	2	417.82	417.66	417.87	417.71	5.96	5.43	1.39	0.85	4.6	0.05	5.43	15.6
20OUT3	20	OUT3	11.6	13.1	0.01	4.31	2	n/a	0.04	417	416.5	415	414.5	0.21	6.79	0.39	2	2	417.66	417.66	417.66	417.66	3	1.23	0.28	0.95	4.6	0	1.23	54.73
30-out2	30	out2	122.01	124.51	0.01	0.27	4	n/a	0	416.31	415.98	412.31	411.98	2.58	7.01	4.78	4	4	417.85	417.66	418.2	418.02	21.76	60.1	18.56	0.7	4.6	0	60.1	87.05
40-40JB	40	40JB	1.9	13.42	0.02	0.53	4	n/a	0.01	416.85	416.84	412.85	412.84	3.4	5.15	4.67	4	4	418.22	418.15	418.56	418.49	20.95	58.65	18.23	0.7	4.6	0	58.65	60.7
40JB-35	40JB	35	90.84	96.09	0.01	0.25	4	n/a	0	416.84	416.61	412.84	412.61	2.58	6.84	4.67	4	4	418.15	418.01	418.49	418.35	21	58.65	18.23	0.7	4.6	0	58.65	84.23

LAS CRUCES FLECHA STORM DRAIN INLET CONFIGURATIONS

ID	Station	Offset	Elevation	Type	Profile Type	Curb Length	Curb Depression	Curb Height	Curb Depr Width	Max Ponded Width	Max Ponded Depth	Grate Type	Grate Length	Grate Width	Grate Area	Grate Perimeter	Grate Clog Area	Longitudinal Slope
10	12+70.00	-24	420.22	Curb	Sag	14	0.25	0.5	1.5	0	0.67	n/a	n/a	n/a	n/a	n/a	n/a	n/a
20	15+60.00	-24	419.81	Curb	Sag	5	0.25	0.5	1.5	0	0.58	n/a	n/a	n/a	n/a	n/a	n/a	n/a
30	17+65.00	24.5	419.81	Curb	Sag	5	0.25	0.5	1.5	0	0.58	n/a	n/a	n/a	n/a	n/a	n/a	n/a
40	20+10.00	18.74	418.7	Grate	Sag	n/a	n/a	n/a	n/a	0	0.58	Parallel 1 1/8	29.75	2.5	74.38	64.5	0.5	n/a
50	20+56.00	-20.75	419.63	Curb	Sag	14	0.25	0.5	1.5	0	0.58	n/a	n/a	n/a	n/a	n/a	n/a	n/a

LAS CRUCES FLECHA STORM DRAIN INLET HYDRAULIC CALCULATIONS

Inlet ID	Station	Type	Profile Type	Discharge	Capacity	By Pass Flow	By Pass Flow Into	By Pass Node ID	Curb Length	Length Required	Computed Ponded Width	Computed Ponded Depth
10	12+70.00	Curb	Sag	5.43	21.06	0	0		14	83.54	10.67	0.27
20	15+60.00	Curb	Sag	1.23	7.88	0	0		5	5.19	7.13	0.17
30	17+65.00	Curb	Sag	1.45	7.88	0	0		5	5.19	4.98	0.19
40	20+10.00	Grate	Sag	46.92	44.32	0	0		n/a	n/a	24.26	0.61
50	20+56.00	Curb	Sag	11.73	17.1	0	0		14	83.54	129.56	0.45

LAS CRUCES FLECHA DISCHARGE CALCULATIONS

ID	Composite C Value	Composite Area	Time of Concentration	Tc Used	Intensity I5 in/Hr	Discharge
10	0.85	1.39	5.96	10	4.3	5.43
20	0.95	0.28	3	10	4.3	1.23
30	0.95	0.33	2.78	10	4.3	1.45
40	0.68	15	20.47	20.47	4.3	46.92
50	0.79	3.23	20.67	20.67	4.3	11.73

INLETS DESIGNED FOR Q5; MAIN TRUNKLINES & LATERALS FOR Q5;
STORM SEWER CALCULATIONS PERFORED IN GEOPAK DRAINAGE
(GEOPAK V8i SELECT series 2).

LAS CRUCES REALIGNMENT

STORM DRAIN CALCULATIONS

SHEET 1 OF 1

KCI TECHNOLOGIES, INC.
2806 W. BITTERS RD. - SUITE 218
SAN ANTONIO, TX 78248 - 210.641.9999
TEXAS REGISTERED ENGINEERING FIRM
TBPE FIRM No. F-10573
www.kci.com

Texas Department of Transportation

FED.RD. DIV.NO.	FEDERAL AID PROJECT NO.		SHEET NO.
6	DMO 2012 (628)		101
STATE	DIST.	COUNTY	
TEXAS	LRD	WEBB	
CONT.	SECT.	JOB	HIGHWAY NO.
0922	33	076	CS

PLOTTED ON: 2/24/2025 @ 7:04:45 PM DESIGN FILENAME: X:\data\txdot\Projects\359700_LasCruces_Flecha\WestLaredoCorridor\DRAINAGE\LasCruces_DRN_CALC.dgn

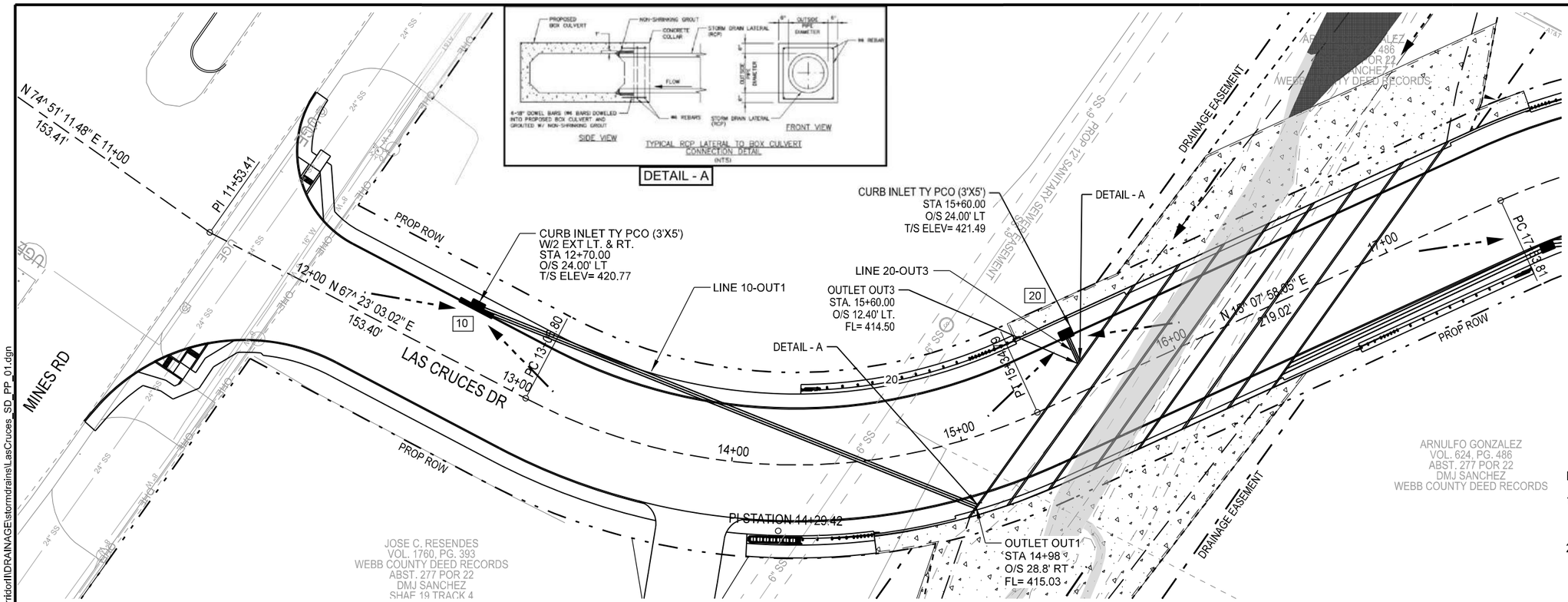

NOTE:

1. UTILITIES DISPLAYED AT ASSUMED DEPTHS. CONTRACTOR TO VERIFY BEFORE BEGINNING CONSTRUCTION
2. DETAIL - A: IS SUBSIDIARY OF BID ITEM 462.

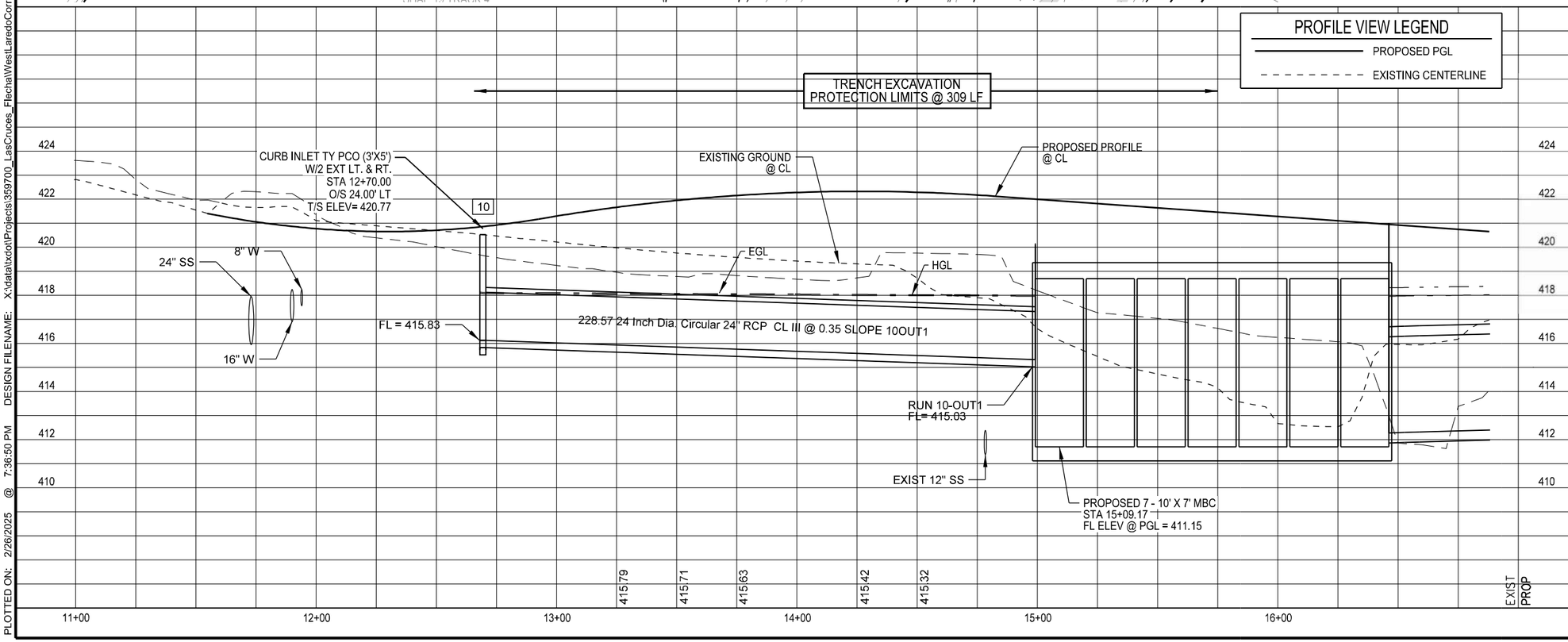

GRAPHIC SCALE
(IN FEET)
25 12.5 0 25 50 75
1" = 50'
Vert: 1" = 5'

STATE OF TEXAS
KYLE GASS
94833
LICENSED PROFESSIONAL ENGINEER

KYLE GASS, P.E.
7/31/2025

LAS CRUCES REALIGNMENT

STORM DRAIN PLAN & PROFILE

SHEET 1 OF 2

KCI TECHNOLOGIES, INC.
2806 W. BITTERS RD. - SUITE 218
SAN ANTONIO, TX 78248 - 210.641.9999
TEXAS REGISTERED ENGINEERING FIRM
TBPE FIRM No. F-10573
www.kci.com

Texas Department of Transportation

FED.RD. DIV.NO.	FEDERAL AID PROJECT NO.		SHEET NO.
6	DMO 2012 (628)		102
STATE	DIST.	COUNTY	
TEXAS	LRD	WEBB	
CONT.	SECT.	JOB	HIGHWAY NO.
0922	33	076	CS

PLOTTED ON: 2/26/2025 @ 7:36:50 PM DESIGN FILENAME: X:\data\txdot\Projects\359700_LasCruces_Flecha\WestLaredoCorridor\DRAINAGE\stormdrains\LasCruces_SD_PP_01.dgn

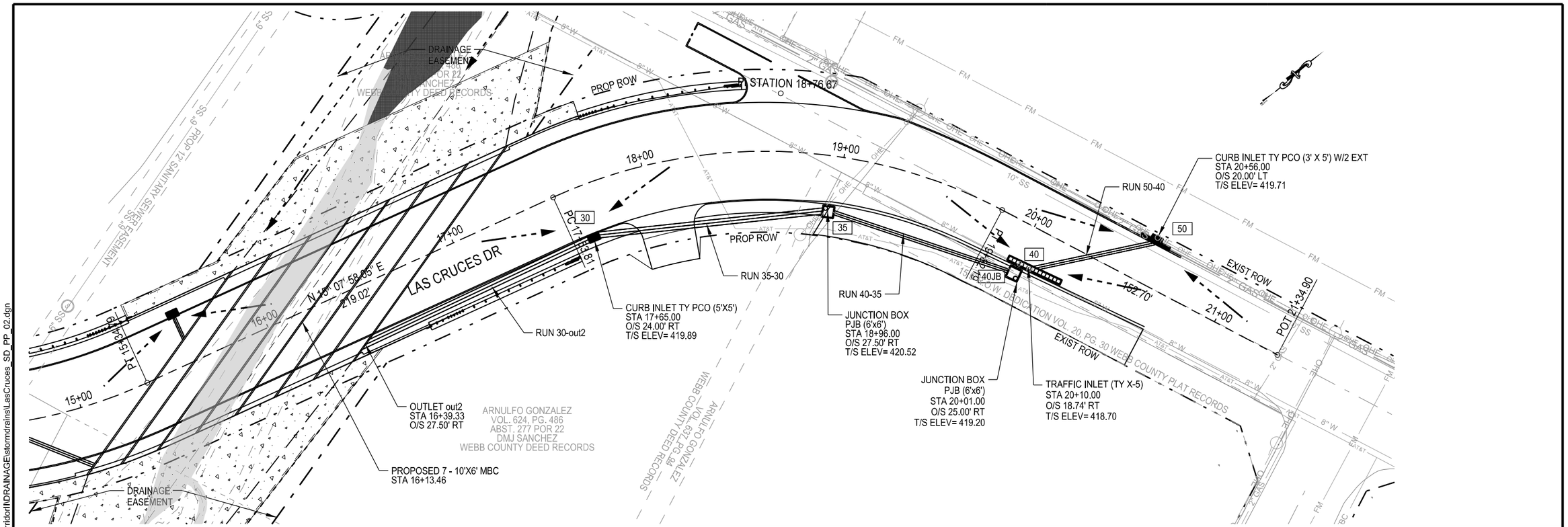

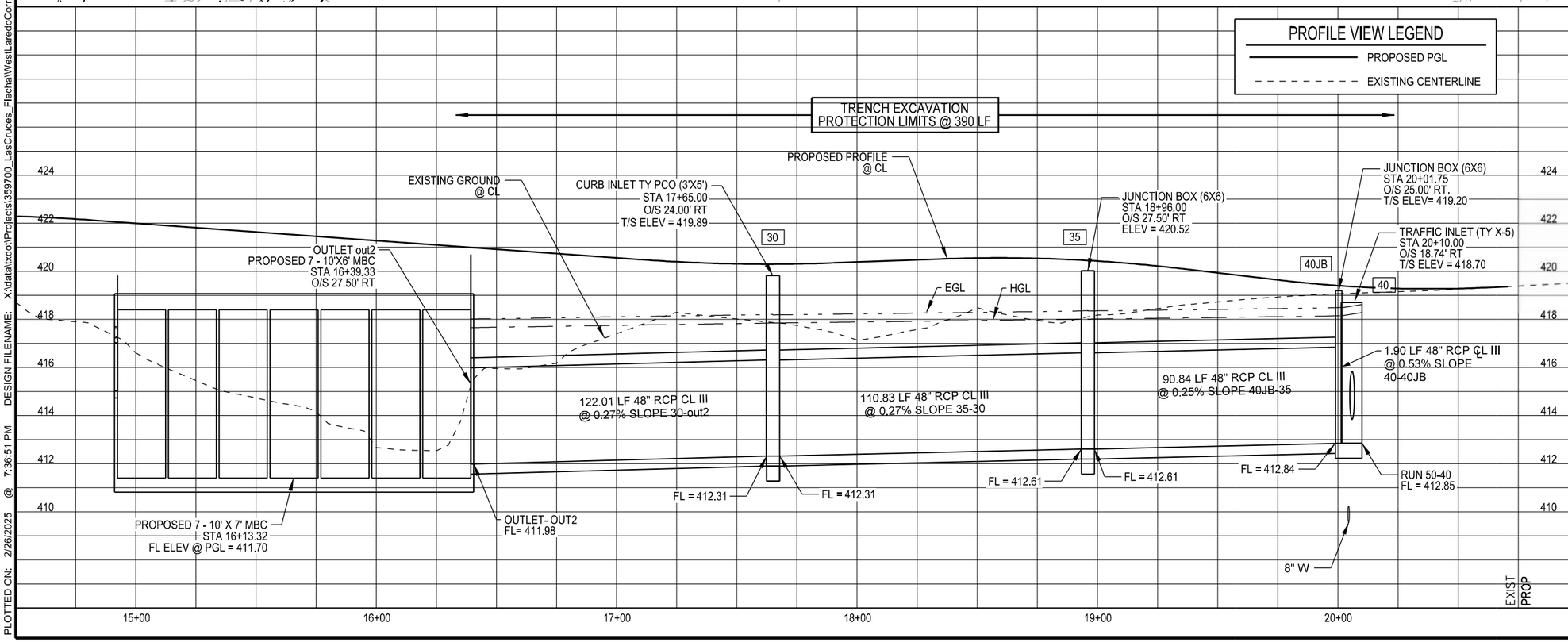

GRAPHIC SCALE
(IN FEET)
25 12.5 0 25 50 75
1" = 50'
Vert: 1" = 5'

STATE OF TEXAS
KYLE GASS
94833
LICENSED PROFESSIONAL ENGINEER

KYLE GASS, P.E.
7/31/2025

LAS CRUCES REALIGNMENT

STORM DRAIN PLAN & PROFILE

SHEET 2 OF 2

KCI TECHNOLOGIES, INC.
2806 W. BITTERS RD. - SUITE 218
SAN ANTONIO, TX 78248 - 210.641.9999
TEXAS REGISTERED ENGINEERING FIRM
TBPE FIRM No. F-10573
www.kci.com

Texas Department of Transportation

FED.RD. DIV.NO.	FEDERAL AID PROJECT NO.		SHEET NO.
6	DMO 2012 (628)		103
STATE	DIST.	COUNTY	
TEXAS	LRD	WEBB	
CONT.	SECT.	JOB	HIGHWAY NO.
0922	33	076	CS

PLOTTED ON: 2/26/2025 @ 7:36:51 PM DESIGN FILENAME: X:\data\txdot\Projects\359700_LasCruces_FlechaWestLaredoCorridor\DRAINAGE\stormdrains\LasCruces_SD_PP_02.dgn

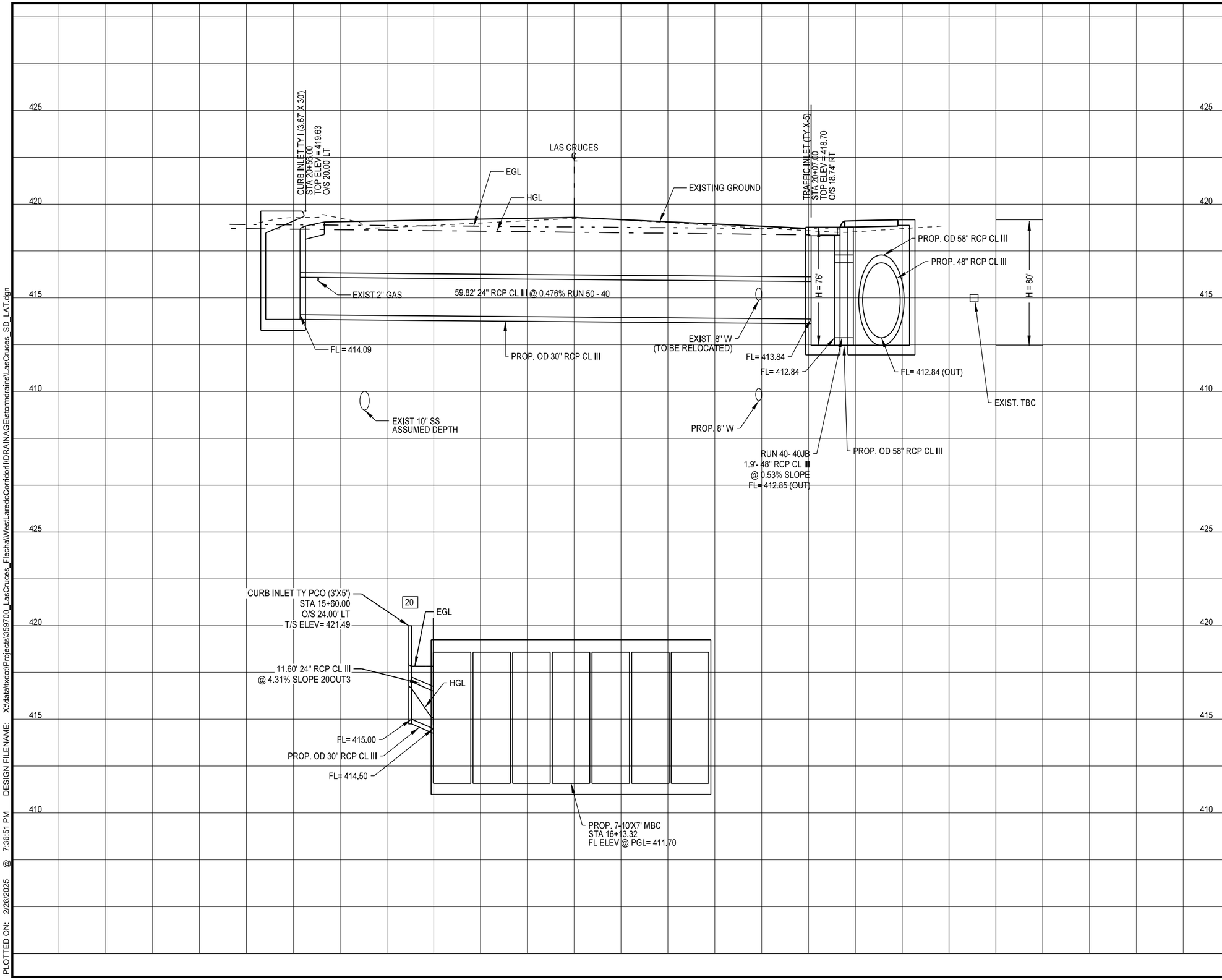

PROFILE VIEW LEGEND

PROPOSED PGL

EXISTING CENTERLINE

GRAPHIC SCALE
(IN FEET)

30 15 0 5 10 15

1" = 10'
Vert: 1" = 5'

STATE OF TEXAS
KYLE GASS
94833
LICENSED
PROFESSIONAL ENGINEER

KYLE GASS, P.E.
7/31/2025

LAS CRUCES REALIGNMENT

STORM DRAIN LATERALS

SHEET 1 OF 1

KCI TECHNOLOGIES, INC.
2806 W. BITTERS RD. - SUITE 218
SAN ANTONIO, TX 78248 - 210.641.9999
TEXAS REGISTERED ENGINEERING FIRM
TBPE FIRM No. F-10573
www.kci.com

Texas Department of Transportation

FED.RD. DIV.NO.	FEDERAL AID PROJECT NO.		SHEET NO.
6	DMO 2012 (628)		104
STATE	DIST.	COUNTY	
TEXAS	LRD	WEBB	
CONT.	SECT.	JOB	HIGHWAY NO.
0922	33	076	CS

PLOTTED ON: 2/26/2025 @ 7:36:51 PM DESIGN FILENAME: X:\data\txdot\Projects\359700_LasCruces_FlechalWestLaredoCorridor\IDRAINAGE\stormdrains\LasCruces_SD_LAT.dgn

DISCLAIMER:
The use of this standard is governed by the "Texas Engineering Practice Act". No warranty of any kind is made by TxDOT for any purpose whatsoever.
TxDOT assumes no responsibility for the conversion of this standard to other formats or for incorrect results or damages resulting from its use.

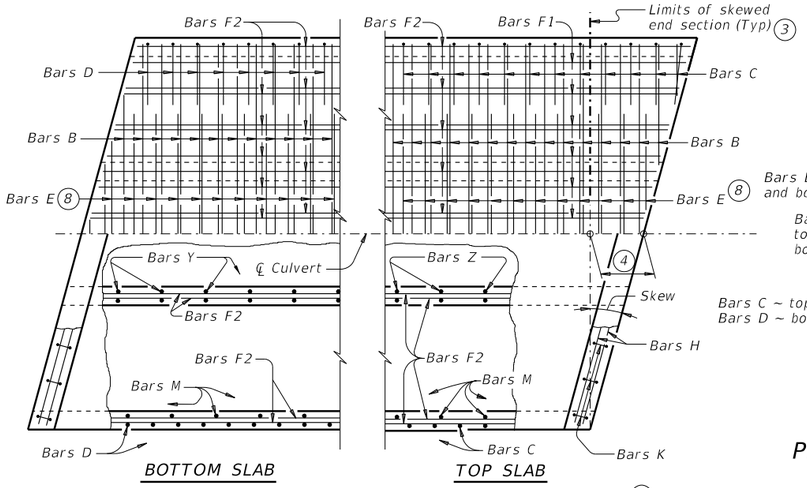

PLAN OF SKEWED ENDS ~ FROM 0° TO 15° 7

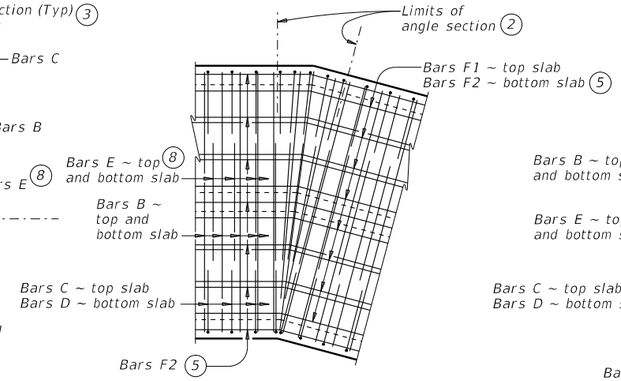

PLAN OF ANGLE SECTION ~ FROM 0° TO 15°

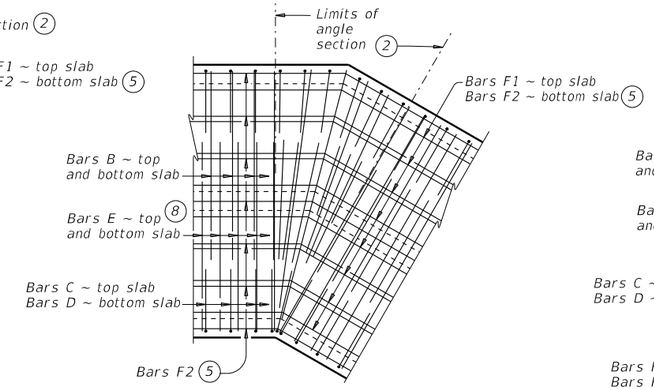

PLAN OF ANGLE SECTION ~ OVER 15° TO 30°

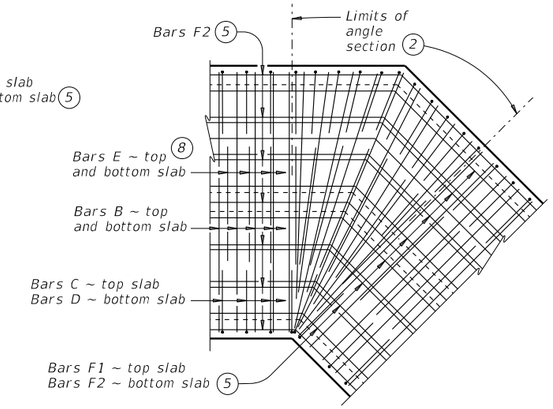

PLAN OF ANGLE SECTION ~ OVER 30° TO 45°

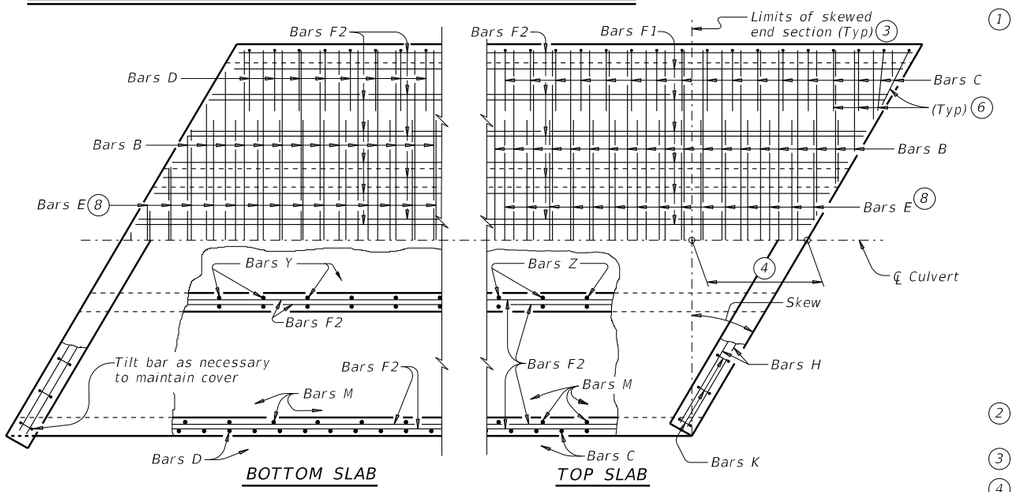

PLAN OF SKEWED ENDS ~ OVER 15° TO 30°

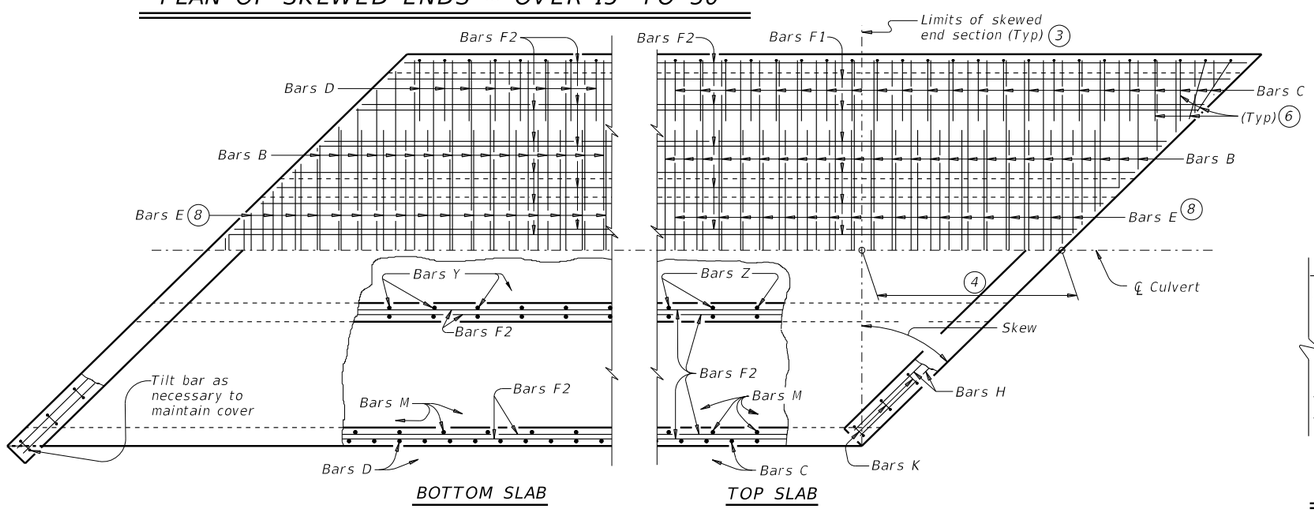

PLAN OF SKEWED ENDS ~ OVER 30° TO 45°

1. For skewed box culverts with less than 2'-0" of fill, break back the top slab to provide a 1'-10" minimum lap of the existing longitudinal bars with the longitudinal bars in the extension.
   For non-skewed box culverts with less than 2'-0" of fill and for skewed or non-skewed culverts with a fill depth of 2'-0" or greater, break back the top slab to provide a 1'-10" minimum lap of the existing longitudinal bars with the longitudinal bars in the extension. Alternatively, if the box is non-skewed, embed #6 anchor bars with a Type III, Class C, D, E, or F anchor adhesive into the existing walls, top and bottom slab at 1'-6" center-to-center spacing. Minimum embedment depth is 8". Anchor adhesive chosen must be able to achieve a basic bond strength in tension, Nba, of 26.4 kips. Submit signed and sealed calculations or the manufacturer's published literature showing the proposed anchor adhesive's ability to develop this load to the Engineer for approval prior to use. Anchor installation, including hole size, drilling, and clean out, must be in accordance with Item 450, "Railing." Test adhesive anchors in accordance with Item 450.3.3, "Tests." Test 3 anchors per 100 anchors installed.
   Break back wings and apron as necessary to install the extension. Clean and extend the exposed wingwall and apron reinforcing into the extension. When lengthening existing box culverts with dimensions different than current standard dimensions, form horizontal and vertical transitions as directed by the Engineer. Match bottom slabs to maintain an uninterrupted flow line. Field bend existing and new reinforcing into transitions and maintain specified cover requirements. For top slabs of culverts with overlay, with 1-to-2 course surface treatment, or with the top slab as the final riding surface, adjust the "H" dimension to provide a smooth riding surface.
2. When the spacing between Bars B or Bars E becomes less than half of the normal spacing, cut bars to avoid conflict.
3. The length of Bars B and Bars E will vary in the skewed end sections.
4. [One half of overall width] x [tangent of the skew angle]
5. Place Bars F1 and F2 continuously through the angle section. Bend Bars F1 and F2 to remain parallel to the walls of the box culvert.
6. When necessary to avoid conflict in acute corners, shorten the slab extension leg of Bars C and Bars D to a minimum of 1'-6" for skews of 30° thru 45°.
7. At the Contractor's option, for skews of 15° or less, place Bars B, C, D, and E parallel to the skewed end while maintaining spacing along centerline of box. Increase lengths of Bars B and Bars E shown on the Multiple Box Culverts Cast-In-Place (MC) standard sheets to accommodate the skew.
8. Extend Bars E as shown on the MC standard sheet for direct traffic culverts.

CONSTRUCTION NOTES:

Do not use permanent forms.
When required, lap Bars H 1'-8" for uncoated or galvanized bars.
Provide a minimum of 1 ½" clear cover.

MATERIAL NOTES:

Provide Grade 60 reinforcing steel.
Provide galvanized reinforcing steel, if required elsewhere in the plans.
Provide Class C concrete (f'c = 3,600 psi) with these exceptions: provide Class S concrete (f'c = 4,000 psi) for top slabs of culverts with overlay, with 1-to-2 course surface treatment, or with the top slab as the final riding surface.

GENERAL NOTES:

Designed according to AASHTO LRFD Bridge Design Specifications.
Refer to Multiple Box Culverts Cast-in-Place (MC) standard sheets for details of straight sections of culvert.
For skewed sections and angle sections, refer to Multiple Box Culverts Cast-in-Place (MC) standard sheets for slab and wall dimensions, bar sizes, maximum bar spacing, and any other details not shown.
For skewed ends with curbs, adjust length of Bars H, number of Bars K, curb concrete volume, and reinforcing steel weight by dividing the values shown on the Multiple Box Culverts Cast-In-Place (MC) standard sheets by the cosine of the skew angle.

Cover dimensions are clear dimensions, unless noted otherwise.

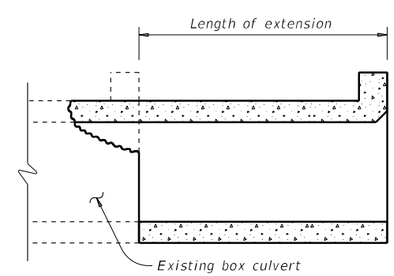

LENGTHENING DETAIL 1

HL93 LOADING

Texas Department of Transportation — Bridge Division Standard

MULTIPLE BOX CULVERTS CAST-IN-PLACE MISCELLANEOUS DETAILS

MC-MD

FILE: CD-MC-MD-20.dgn	DN: TxDOT	CK: TxDOT	DW: TxDOT	CK: TxDOT
©TxDOT February 2020	CONT	SECT	JOB	HIGHWAY
REVISIONS	0922	33	076	CS
	DIST		COUNTY	SHEET NO.
	LRD		WEBB	105

DATE:
FILE:

DISCLAIMER:
The use of this standard is governed by the "Texas Engineering Practice Act". No warranty of any kind is made by TxDOT for any purpose whatsoever. TxDOT assumes no responsibility for the conversion of this standard to other formats or for incorrect results or damages resulting from its use.

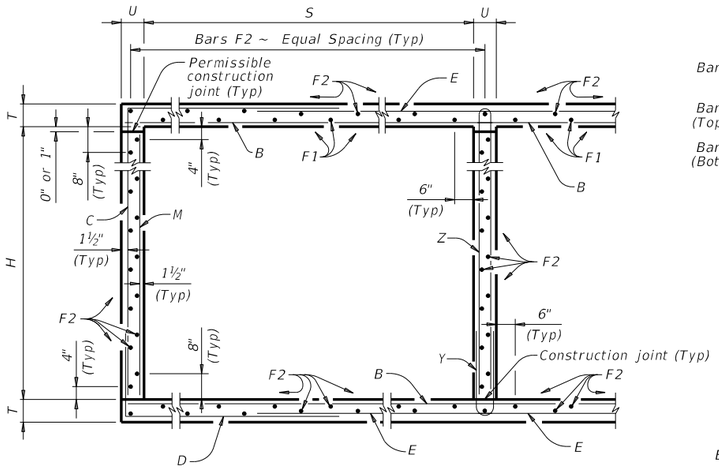

TYPICAL SECTION

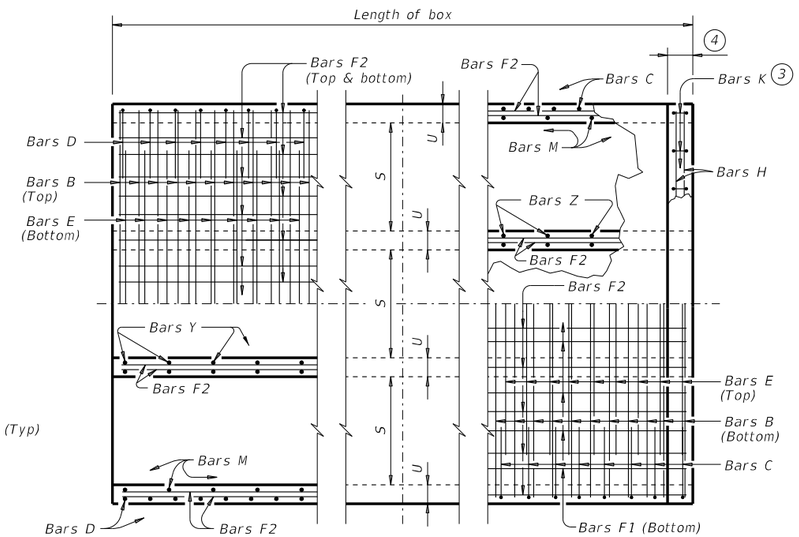

BOTTOM SLAB

TOP SLAB

PART PLANS

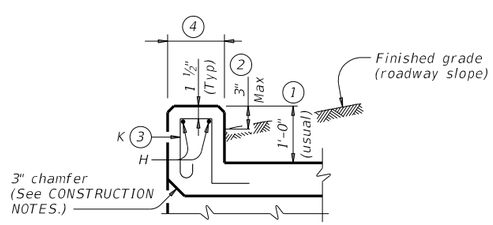

SECTION THRU CURB

TABLE OF BAR DIMENSIONS		
H	"X"	"Y"
4'-0"	4'-6 ½"	5'-9"
5'-0"	5'-6 ½"	5'-9"
6'-0"	6'-6 ½"	5'-9"
7'-0"	7'-6 ½"	5'-9"
8'-0"	8'-6 ½"	5'-9"
9'-0"	9'-6 ½"	5'-9"
10'-0"	10'-6 ½"	5'-9"

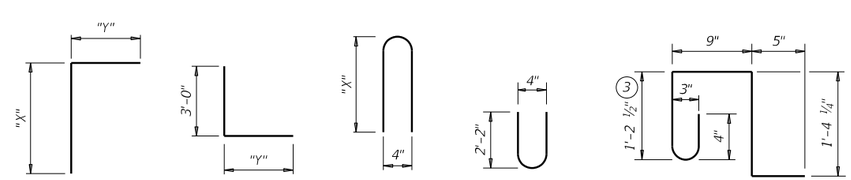

BARS C BARS D BARS Z BARS Y BARS K (#4)
(Spa = 1'-0" Max)
(Length = 4'-2")

1. 0" Min to 5'-0" Max. Estimated curb heights are shown elsewhere in the plans. For structures with pedestrian rail or curbs taller than 1'-0", refer to the Extended Curb Details (ECD) standard sheet. For structures with T631 or T631LS bridge rail, refer to the Mounting Details for T631 & T631LS Rails (T631-CM) standard sheet. Refer to the Rail Anchorage Curb (RAC) standard sheet for structures with bridge rail other than T631 or T631LS.

2. For vehicle safety, the following requirements must be met:
   - For structures without bridge rail, construct curbs no more than 3" above finished grade.
   - For structures with bridge rail, construct curbs flush with finished grade.

   Reduce curb heights, if necessary, to meet the above requirements. No changes will be made in quantities and no additional compensation will be allowed for this work.

3. For curbs less than 1'-0" high, tilt Bars K or reduce bar height as necessary to maintain cover. For curbs less than 3" high, Bars K may be omitted.

4. 1'-0" typical. 2'-3" when the Rail Anchorage Curb (RAC) standard sheet is referred to elsewhere in the plans.

The Contractor may replace Bars B, C, D, E, F1, F2, M, Y, and/or Z with deformed welded wire reinforcement (WWR) meeting the requirements of ASTM A1064. The area of required reinforcement may be reduced by the ratio of 60 ksi / 70 ksi. Spacing of WWR is limited to 4" Min and 18" Max. When required, provide lap splices in the WWR of the same length required for the equivalent bar size, rounded up for wire sizes between conventional bar sizes. The lap length required for WWR is never less than the lap length required for uncoated #4 bars.

Example conversion: Replacing No. 6 Gr 60 at 6" Spacing with WWR
Required WWR = (0.44 sq. in. per 0.5 ft.) x (60 ksi / 70 ksi) = 0.755 sq. in. per ft.
If D30.6 wire is used to meet the 0.755 sq. in. per ft. requirement in this example, the required spacing = (0.306 sq. in.) / (0.755 sq. in. per ft.) x (12 in. per ft.) = 4.86" Max spacing. Required lap length for the provided D30.6 wire is 2'-1" (the same minimum lap length required for uncoated #5 bars, as listed under MATERIAL NOTES).

CONSTRUCTION NOTES:

Do not use permanent forms.
Chamfer the bottom edge of the top slab 3" at the entrance.
Optionally, raise construction joints shown at the flow line by a maximum of 6". If this option is taken, Bars M may be cut off or raised, Bars C and D may be reversed, and Bars Y and Z may be reversed.

MATERIAL NOTES:

Provide Grade 60 reinforcing steel.
Provide galvanized reinforcing steel if required elsewhere in the plans.
Provide Class C concrete (f'c = 3,600 psi) for culvert barrel and curb, with the following exceptions: provide Class S concrete (f'c = 4,000 psi) for top slabs of:
- culverts with overlay,
- culverts with 1-to-2 course surface treatment, or
- culverts with the top slab as the final riding surface.

Provide bar laps, where required, as follows:
- Uncoated or galvanized ~ #4 = 1'-8" Min
- Uncoated or galvanized ~ #5 = 2'-1" Min
- Uncoated or galvanized ~ #6 = 2'-6" Min

GENERAL NOTES:

Designed according to AASHTO LRFD Bridge Design Specifications for the range of fill heights shown.
See the Multiple Box Culverts Cast-In-Place Miscellaneous Detail (MC-MD) standard sheet for details pertaining to skewed ends, angle sections, and lengthening.

Cover dimensions are clear dimensions, unless noted otherwise.
Reinforcing bar dimensions shown are out-to-out of bar.

HL93 LOADING

Texas Department of Transportation — Bridge Division Standard

MULTIPLE BOX CULVERTS CAST-IN-PLACE
10'-0" SPAN
0' TO 7' FILL
MC-10-7

FILE: CD-MC1007-20.dgn	DN: TBE	CK: BMP	DW: TxDOT	CK: TxDOT
©TxDOT February 2020	CONT	SECT	JOB	HIGHWAY
REVISIONS	0922	33	076	CS
	DIST		COUNTY	SHEET NO.
	LRD		WEBB	106

DATE:
FILE:

DISCLAIMER:
The use of this standard is governed by the "Texas Engineering Practice Act". No warranty of any kind is made by TxDOT for any purpose whatsoever.
TxDOT assumes no responsibility for the conversion of this standard to other formats or for incorrect results or damages resulting from its use.

NUMBER OF SPANS	SECTION DIMENSIONS				BILLS OF REINFORCING STEEL (For Box Length = 40 feet)																																						QUANTITIES					
					Bars B (5)					Bars C & D							Bars E					Bars F1 ~ #4				Bars F2 ~ #4				Bars M ~ #4				Bars Y & Z ~ #4								Bars H (5) 4 ~ #4		Bars K		Per Foot of Barrel		Curb		Total	
													Bars C		Bars D																						Bars Y		Bars Z											
	S	H	T	U	No.	Size	Spa	Length	Wt	No.	Size	Spa	Length	Wt	Length	Wt	No.	Size	Spa	Length	Wt	No.	Spa	Length	Wt	No.	Spa	Length	Wt	No.	Spa	Length	Wt	No.	Spa	Length	Wt	Length	Wt	Length	Wt	No.	Wt	Conc (CY)	Renf (Lb)	Conc (CY)	Renf (Lb)	Conc (CY)	Renf (Lb)
2	10' – 0"	4' – 0"	8"	7"	162	#6	6"	21' – 6"	5,231	108	#6	9"	10' – 4"	1,676	8' – 10"	1,433	162	#6	6"	15' – 4"	3,731	14	18"	39' – 9"	372	66	18"	39' – 9"	1,752	108	9"	4' – 0"	289	54	9"	4' – 7"	165	9' – 3"	334	21' – 6"	57	46	128	1.333	374.6	1.6	185	54.9	15,168
3	10' – 0"	4' – 0"	8"	7"	162	#6	6"	32' – 1"	7,807	108	#6	9"	10' – 4"	1,676	8' – 10"	1,433	162	#6	6"	25' – 11"	6,306	21	18"	39' – 9"	558	95	18"	39' – 9"	2,523	108	9"	4' – 0"	289	108	9"	4' – 7"	331	9' – 3"	667	32' – 1"	86	68	189	1.942	539.8	2.4	275	80.1	21,865
4	10' – 0"	4' – 0"	8"	7"	162	#6	6"	42' – 8"	10,382	108	#6	9"	10' – 4"	1,676	8' – 10"	1,433	162	#6	6"	36' – 6"	8,881	28	18"	39' – 9"	743	124	18"	39' – 9"	3,293	108	9"	4' – 0"	289	162	9"	4' – 7"	496	9' – 3"	1,001	42' – 8"	114	88	245	2.551	704.9	3.2	359	105.2	28,553
5	10' – 0"	4' – 0"	8"	7"	162	#6	6"	53' – 3"	12,957	108	#6	9"	10' – 4"	1,676	8' – 10"	1,433	162	#6	6"	47' – 1"	11,457	35	18"	39' – 9"	929	153	18"	39' – 9"	4,063	108	9"	4' – 0"	289	216	9"	4' – 7"	661	9' – 3"	1,335	53' – 3"	142	110	306	3.160	870.0	3.9	448	130.3	35,248
6	10' – 0"	4' – 0"	8"	7"	162	#6	6"	66' – 4"	16,140	108	#6	9"	10' – 4"	1,676	8' – 10"	1,433	162	#6	6"	57' – 8"	14,032	42	18"	39' – 9"	1,115	182	18"	39' – 9"	4,833	108	9"	4' – 0"	289	270	9"	4' – 7"	827	9' – 3"	1,668	65' – 6"	175	130	362	3.770	1,050.3	4.7	537	155.5	42,550
2	10' – 0"	5' – 0"	8"	7"	162	#6	6"	21' – 6"	5,231	108	#6	9"	11' – 4"	1,838	8' – 10"	1,433	162	#6	6"	15' – 4"	3,731	14	18"	39' – 9"	372	72	18"	39' – 9"	1,912	108	9"	5' – 0"	361	54	9"	4' – 7"	165	11' – 3"	406	21' – 6"	57	46	128	1.398	386.2	1.6	185	57.5	15,634
3	10' – 0"	5' – 0"	8"	7"	162	#6	6"	32' – 1"	7,807	108	#6	9"	11' – 4"	1,838	8' – 10"	1,433	162	#6	6"	25' – 11"	6,306	21	18"	39' – 9"	558	103	18"	39' – 9"	2,735	108	9"	5' – 0"	361	108	9"	4' – 7"	331	11' – 3"	812	32' – 1"	86	68	189	2.029	554.5	2.4	275	83.5	22,456
4	10' – 0"	5' – 0"	8"	7"	162	#6	6"	42' – 8"	10,382	108	#6	9"	11' – 4"	1,838	8' – 10"	1,433	162	#6	6"	36' – 6"	8,881	28	18"	39' – 9"	743	134	18"	39' – 9"	3,558	108	9"	5' – 0"	361	162	9"	4' – 7"	496	11' – 3"	1,217	42' – 8"	114	88	245	2.659	722.7	3.2	359	109.5	29,268
5	10' – 0"	5' – 0"	8"	7"	162	#6	6"	53' – 3"	12,957	108	#6	9"	11' – 4"	1,838	8' – 10"	1,433	162	#6	6"	47' – 1"	11,457	35	18"	39' – 9"	929	165	18"	39' – 9"	4,381	108	9"	5' – 0"	361	216	9"	4' – 7"	661	11' – 3"	1,623	53' – 3"	142	110	306	3.290	891.0	3.9	448	135.5	36,088
6	10' – 0"	5' – 0"	8"	7"	162	#6	6"	66' – 4"	16,140	108	#6	9"	11' – 4"	1,838	8' – 10"	1,433	162	#6	6"	57' – 8"	14,032	42	18"	39' – 9"	1,115	196	18"	39' – 9"	5,204	108	9"	5' – 0"	361	270	9"	4' – 7"	827	11' – 3"	2,029	65' – 6"	175	130	362	3.921	1,074.5	4.7	537	161.6	43,516
2	10' – 0"	6' – 0"	8"	7"	162	#6	6"	21' – 6"	5,231	108	#6	9"	12' – 4"	2,001	8' – 10"	1,433	162	#6	6"	15' – 4"	3,731	14	18"	39' – 9"	372	78	18"	39' – 9"	2,071	108	9"	6' – 0"	433	54	9"	4' – 7"	165	13' – 3"	478	21' – 6"	57	46	128	1.463	397.9	1.6	185	60.1	16,100
3	10' – 0"	6' – 0"	8"	7"	162	#6	6"	32' – 1"	7,807	108	#6	9"	12' – 4"	2,001	8' – 10"	1,433	162	#6	6"	25' – 11"	6,306	21	18"	39' – 9"	558	111	18"	39' – 9"	2,947	108	9"	6' – 0"	433	108	9"	4' – 7"	331	13' – 3"	956	32' – 1"	86	68	189	2.115	569.3	2.4	275	87.0	23,047
4	10' – 0"	6' – 0"	8"	7"	162	#6	6"	42' – 8"	10,382	108	#6	9"	12' – 4"	2,001	8' – 10"	1,433	162	#6	6"	36' – 6"	8,881	28	18"	39' – 9"	743	144	18"	39' – 9"	3,824	108	9"	6' – 0"	433	162	9"	4' – 7"	496	13' – 3"	1,434	42' – 8"	114	88	245	2.767	740.7	3.2	359	113.8	29,986
5	10' – 0"	6' – 0"	8"	7"	162	#6	6"	53' – 3"	12,957	108	#6	9"	12' – 4"	2,001	8' – 10"	1,433	162	#6	6"	47' – 1"	11,457	35	18"	39' – 9"	929	177	18"	39' – 9"	4,700	108	9"	6' – 0"	433	216	9"	4' – 7"	661	13' – 3"	1,912	53' – 3"	142	110	306	3.420	912.1	3.9	448	140.7	36,931
6	10' – 0"	6' – 0"	8"	7"	162	#6	6"	66' – 4"	16,140	108	#6	9"	12' – 4"	2,001	8' – 10"	1,433	162	#6	6"	57' – 8"	14,032	42	18"	39' – 9"	1,115	210	18"	39' – 9"	5,576	108	9"	6' – 0"	433	270	9"	4' – 7"	827	13' – 3"	2,390	65' – 6"	175	130	362	4.072	1,098.7	4.7	537	167.6	44,484
2	10' – 0"	7' – 0"	8"	7"	162	#6	6"	21' – 6"	5,231	108	#6	9"	13' – 4"	2,163	8' – 10"	1,433	162	#6	6"	15' – 4"	3,731	14	18"	39' – 9"	372	78	18"	39' – 9"	2,071	108	9"	7' – 0"	505	54	9"	4' – 7"	165	15' – 3"	550	21' – 6"	57	46	128	1.528	405.5	1.6	185	62.7	16,406
3	10' – 0"	7' – 0"	8"	7"	162	#6	6"	32' – 1"	7,807	108	#6	9"	13' – 4"	2,163	8' – 10"	1,433	162	#6	6"	25' – 11"	6,306	21	18"	39' – 9"	558	111	18"	39' – 9"	2,947	108	9"	7' – 0"	505	108	9"	4' – 7"	331	15' – 3"	1,100	32' – 1"	86	68	189	2.202	578.8	2.4	275	90.5	23,425
4	10' – 0"	7' – 0"	8"	7"	162	#6	6"	42' – 8"	10,382	108	#6	9"	13' – 4"	2,163	8' – 10"	1,433	162	#6	6"	36' – 6"	8,881	28	18"	39' – 9"	743	144	18"	39' – 9"	3,824	108	9"	7' – 0"	505	162	9"	4' – 7"	496	15' – 3"	1,650	42' – 8"	114	88	245	2.876	751.9	3.2	359	118.2	30,436
5	10' – 0"	7' – 0"	8"	7"	162	#6	6"	53' – 3"	12,957	108	#6	9"	13' – 4"	2,163	8' – 10"	1,433	162	#6	6"	47' – 1"	11,457	35	18"	39' – 9"	929	177	18"	39' – 9"	4,700	108	9"	7' – 0"	505	216	9"	4' – 7"	661	15' – 3"	2,200	53' – 3"	142	110	306	3.549	925.1	3.9	448	145.9	37,453
6	10' – 0"	7' – 0"	8"	7"	162	#6	6"	66' – 4"	16,140	108	#6	9"	13' – 4"	2,163	8' – 10"	1,433	162	#6	6"	57' – 8"	14,032	42	18"	39' – 9"	1,115	210	18"	39' – 9"	5,576	108	9"	7' – 0"	505	270	9"	4' – 7"	827	15' – 3"	2,750	65' – 6"	175	130	362	4.223	1,113.5	4.7	537	173.7	45,078
2	10' – 0"	8' – 0"	8"	7"	162	#6	6"	21' – 6"	5,231	108	#6	9"	14' – 4"	2,325	8' – 10"	1,433	162	#6	6"	15' – 4"	3,731	14	18"	39' – 9"	372	84	18"	39' – 9"	2,230	108	9"	8' – 0"	577	54	9"	4' – 7"	165	17' – 3"	622	21' – 6"	57	46	128	1.593	417.2	1.6	185	65.3	16,871
3	10' – 0"	8' – 0"	8"	7"	162	#6	6"	32' – 1"	7,807	108	#6	9"	14' – 4"	2,325	8' – 10"	1,433	162	#6	6"	25' – 11"	6,306	21	18"	39' – 9"	558	119	18"	39' – 9"	3,160	108	9"	8' – 0"	577	108	9"	4' – 7"	331	17' – 3"	1,244	32' – 1"	86	68	189	2.288	593.5	2.4	275	93.9	24,016
4	10' – 0"	8' – 0"	8"	7"	162	#6	6"	42' – 8"	10,382	108	#6	9"	14' – 4"	2,325	8' – 10"	1,433	162	#6	6"	36' – 6"	8,881	28	18"	39' – 9"	743	154	18"	39' – 9"	4,089	108	9"	8' – 0"	577	162	9"	4' – 7"	496	17' – 3"	1,867	42' – 8"	114	88	245	2.984	769.8	3.2	359	122.5	31,152
5	10' – 0"	8' – 0"	8"	7"	162	#6	6"	53' – 3"	12,957	108	#6	9"	14' – 4"	2,325	8' – 10"	1,433	162	#6	6"	47' – 1"	11,457	35	18"	39' – 9"	929	189	18"	39' – 9"	5,019	108	9"	8' – 0"	577	216	9"	4' – 7"	661	17' – 3"	2,489	53' – 3"	142	110	306	3.679	946.2	3.9	448	151.1	38,295
6	10' – 0"	8' – 0"	8"	7"	162	#6	6"	66' – 4"	16,140	108	#6	9"	14' – 4"	2,325	8' – 10"	1,433	162	#6	6"	57' – 8"	14,032	42	18"	39' – 9"	1,115	224	18"	39' – 9"	5,948	108	9"	8' – 0"	577	270	9"	4' – 7"	827	17' – 3"	3,111	65' – 6"	175	130	362	4.374	1,137.7	4.7	537	179.7	46,045
2	10' – 0"	9' – 0"	8"	7"	162	#6	6"	21' – 6"	5,231	162	#6	6"	15' – 4"	3,731	8' – 10"	2,149	162	#6	6"	15' – 4"	3,731	14	18"	39' – 9"	372	90	18"	39' – 9"	2,390	108	9"	9' – 0"	649	54	9"	4' – 7"	165	19' – 3"	694	21' – 6"	57	46	128	1.657	477.8	1.6	185	67.9	19,297
3	10' – 0"	9' – 0"	8"	7"	162	#6	6"	32' – 1"	7,807	162	#6	6"	15' – 4"	3,731	8' – 10"	2,149	162	#6	6"	25' – 11"	6,306	21	18"	39' – 9"	558	127	18"	39' – 9"	3,372	108	9"	9' – 0"	649	108	9"	4' – 7"	331	19' – 3"	1,389	32' – 1"	86	68	189	2.374	657.3	2.4	275	97.3	26,567
4	10' – 0"	9' – 0"	8"	7"	162	#6	6"	42' – 8"	10,382	162	#6	6"	15' – 4"	3,731	8' – 10"	2,149	162	#6	6"	36' – 6"	8,881	28	18"	39' – 9"	743	164	18"	39' – 9"	4,355	108	9"	9' – 0"	649	162	9"	4' – 7"	496	19' – 3"	2,083	42' – 8"	114	88	245	3.092	836.7	3.2	359	126.8	33,828
5	10' – 0"	9' – 0"	8"	7"	162	#6	6"	53' – 3"	12,957	162	#6	6"	15' – 4"	3,731	8' – 10"	2,149	162	#6	6"	47' – 1"	11,457	35	18"	39' – 9"	929	201	18"	39' – 9"	5,337	108	9"	9' – 0"	649	216	9"	4' – 7"	661	19' – 3"	2,778	53' – 3"	142	110	306	3.809	1,016.2	3.9	448	156.3	41,096
6	10' – 0"	9' – 0"	8"	7"	162	#6	6"	66' – 4"	16,140	162	#6	6"	15' – 4"	3,731	8' – 10"	2,149	162	#6	6"	57' – 8"	14,032	42	18"	39' – 9"	1,115	238	18"	39' – 9"	6,320	108	9"	9' – 0"	649	270	9"	4' – 7"	827	19' – 3"	3,472	65' – 6"	175	130	362	4.526	1,210.9	4.7	537	185.8	48,972
2	10' – 0"	10' – 0"	8"	7"	162	#6	6"	21' – 6"	5,231	162	#6	6"	16' – 4"	3,974	8' – 10"	2,149	162	#6	6"	15' – 4"	3,731	14	18"	39' – 9"	372	90	18"	39' – 9"	2,390	108	9"	10' – 0"	721	54	9"	4' – 7"	165	21' – 3"	767	21' – 6"	57	46	128	1.722	487.5	1.6	185	70.5	19,685
3	10' – 0"	10' – 0"	8"	7"	162	#6	6"	32' – 1"	7,807	162	#6	6"	16' – 4"	3,974	8' – 10"	2,149	162	#6	6"	25' – 11"	6,306	21	18"	39' – 9"	558	127	18"	39' – 9"	3,372	108	9"	10' – 0"	721	108	9"	4' – 7"	331	21' – 3"	1,533	32' – 1"	86	68	189	2.461	668.8	2.4	275	100.8	27,026
4	10' – 0"	10' – 0"	8"	7"	162	#6	6"	42' – 8"	10,382	162	#6	6"	16' – 4"	3,974	8' – 10"	2,149	162	#6	6"	36' – 6"	8,881	28	18"	39' – 9"	743	164	18"	39' – 9"	4,355	108	9"	10' – 0"	721	162	9"	4' – 7"	496	21' – 3"	2,300	42' – 8"	114	88	245	3.200	850.0	3.2	359	131.2	34,360
5	10' – 0"	10' – 0"	8"	7"	162	#6	6"	53' – 3"	12,957	162	#6	6"	16' – 4"	3,974	8' – 10"	2,149	162	#6	6"	47' – 1"	11,457	35	18"	39' – 9"	929	201	18"	39' – 9"	5,337	108	9"	10' – 0"	721	216	9"	4' – 7"	661	21' – 3"	3,066	53' – 3"	142	110	306	3.938	1,031.3	3.9	448	161.5	41,699
6	10' – 0"	10' – 0"	8"	7"	162	#6	6"	66' – 4"	16,140	162	#6	6"	16' – 4"	3,974	8' – 10"	2,149	162	#6	6"	57' – 8"	14,032	42	18"	39' – 9"	1,115	238	18"	39' – 9"	6,320	108	9"	10' – 0"	721	270	9"	4' – 7"	827	21' – 3"	3,833	65' – 6"	175	130	362	4.677	1,227.8	4.7	537	191.8	49,648

(5) Bar lengths over 60' include one bar lap; refer to MATERIAL NOTES for minimum lap lengths.

HL93 LOADING — SHEET 2 OF 2

Texas Department of Transportation — Bridge Division Standard

MULTIPLE BOX CULVERTS CAST-IN-PLACE

10'-0" SPAN
0' TO 7' FILL

MC-10-7

FILE: CD-MC1007-20.dgn	DN: TBE	CK: BMP	DW: TxDOT	CK: TxDOT
©TxDOT February 2020	CONT	SECT	JOB	HIGHWAY
REVISIONS	0922	33	076	CS
	DIST		COUNTY	SHEET NO.
	LRD		WEBB	107

DATE:
FILE:

DISCLAIMER:
The use of this standard is governed by the "Texas Engineering Practice Act". No warranty of any kind is made by TxDOT for any purpose whatsoever. TxDOT assumes no responsibility for the conversion of this standard to other formats or for incorrect results or damages resulting from its use.

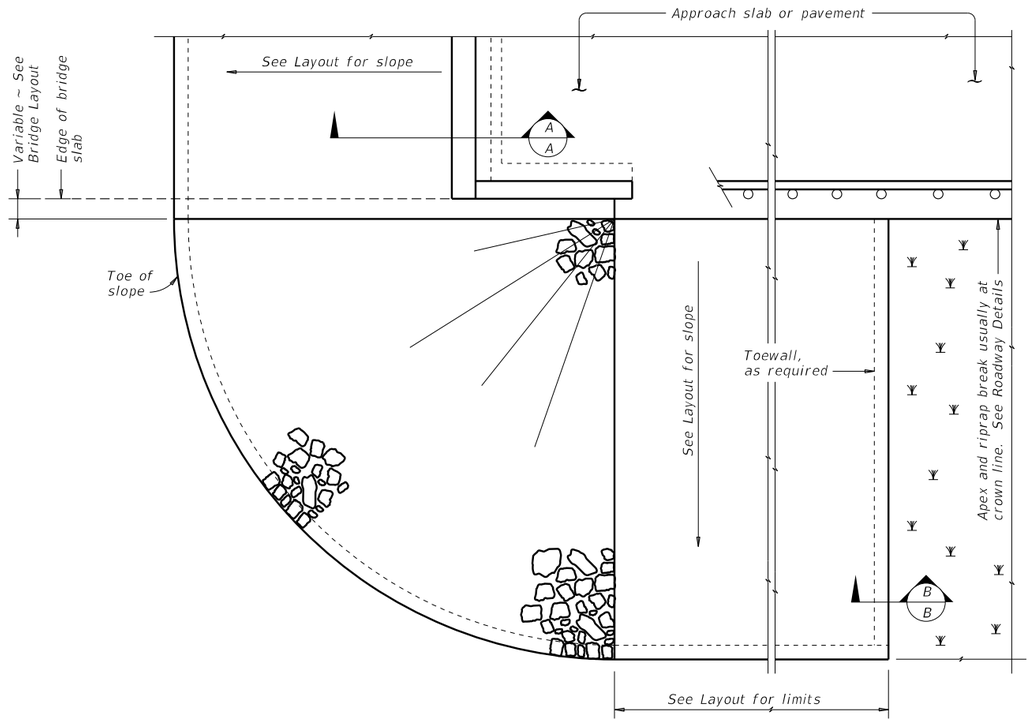

PLAN

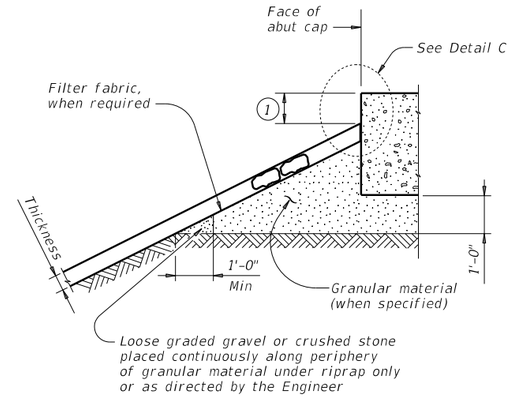

SECTION A-A AT CAP

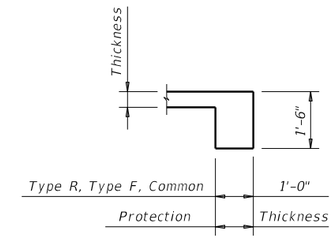

SECTION B-B

Provide toewall when shoulder drain is located adjacent to limits of stone riprap. Omit toewall when thickness of protection riprap is greater than 18".

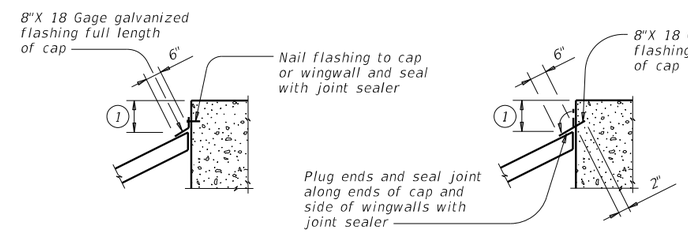

CAP OPTION A

CAP OPTION B

DETAIL C

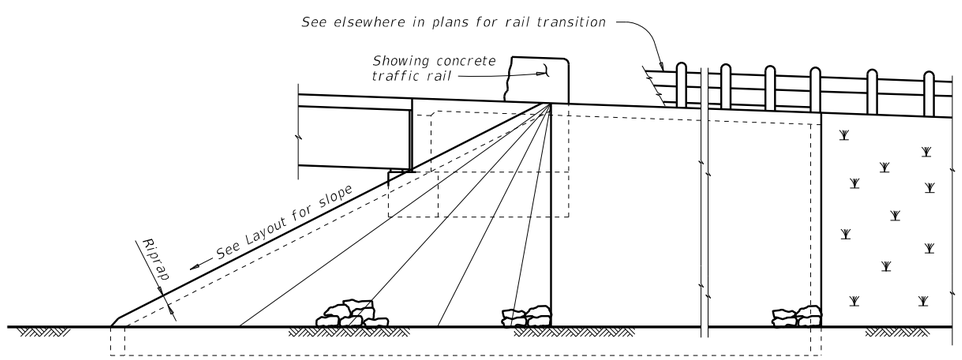

ELEVATION

(1) Top of cap to top of riprap dimension varies as directed by the Engineer. Provide 9" Min for beam/slab type bridges and 1'-6" for slab span, box beam, or slab beam bridges.

GENERAL NOTES:

Refer to Item 432, "Riprap" for stone size and gradation, and construction details. See Layout for limits and thickness of riprap specified.

See elsewhere in plans for locations and details of shoulder drains.

Texas Department of Transportation — Bridge Division Standard

STONE RIPRAP

SRR

FILE: MS-SRR-19.dgn	DN: AES	CK: JGD	DW: BWH	CK: AES
©TxDOT April 2019	CONT	SECT	JOB	HIGHWAY
REVISIONS	0922	33	076	CS
	DIST		COUNTY	SHEET NO.
	LRD		WEBB	108

DATE:
FILE:

DISCLAIMER:
The use of this standard is governed by the "Texas Engineering Practice Act". No warranty of any kind is made by TxDOT for any purpose whatsoever.
TxDOT assumes no responsibility for the conversion of this standard to other formats or for incorrect results or damages resulting from its use.

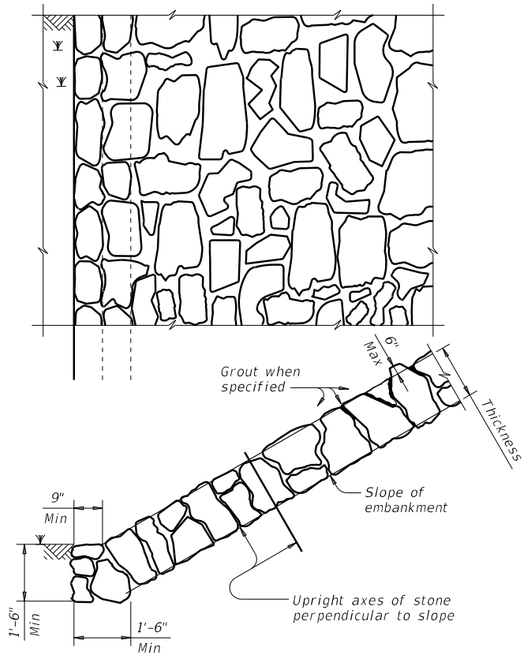

FIGURE 1 ~ TYPE R STONE RIPRAP

dry or grouted

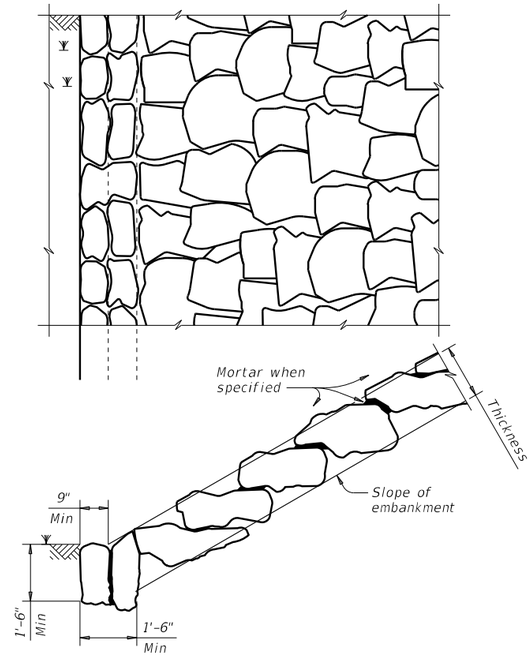

FIGURE 2 ~ TYPE F STONE RIPRAP

dry or mortared

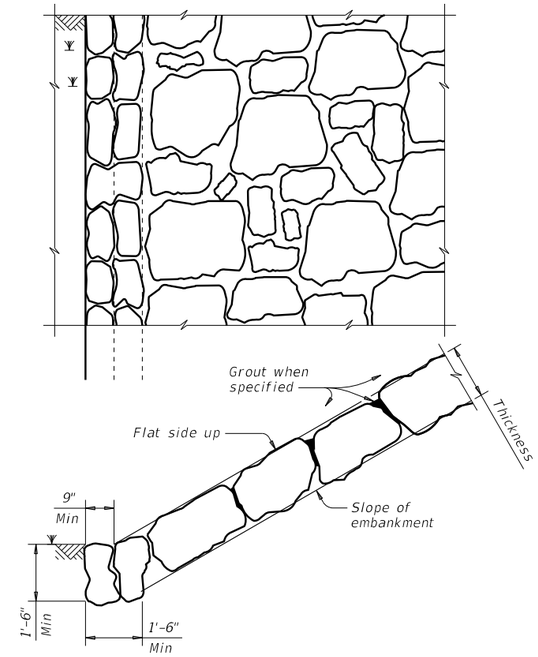

FIGURE 3 ~ TYPE F STONE RIPRAP

grouted

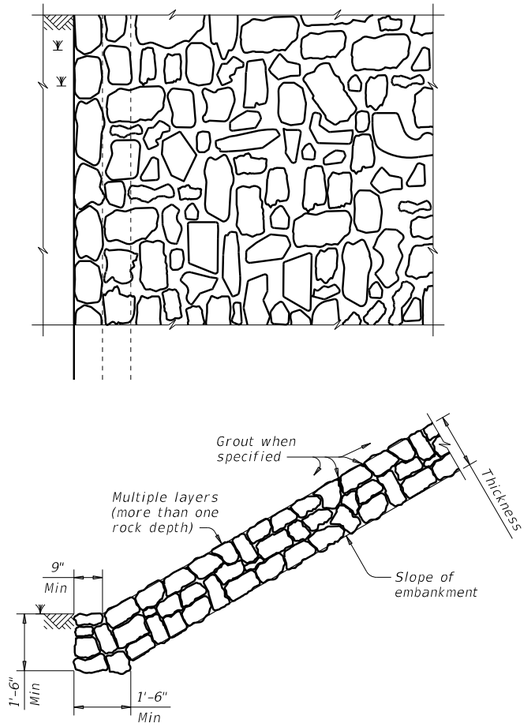

FIGURE 4 ~ COMMON STONE RIPRAP

dry or grouted

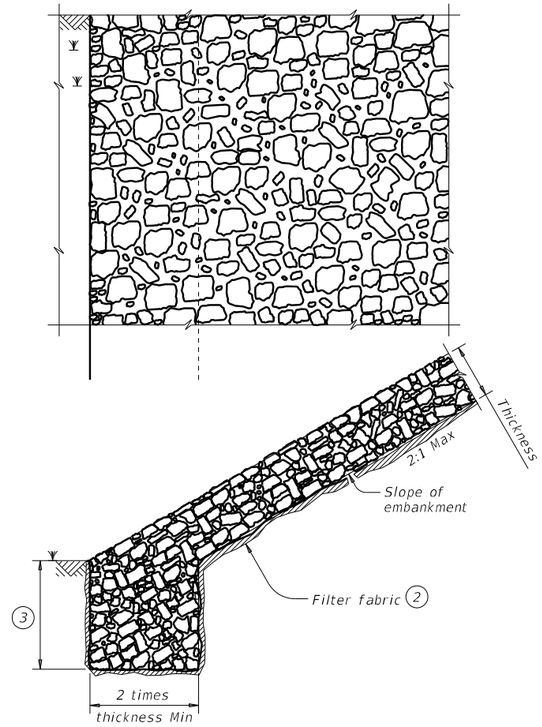

FIGURE 5 ~ PROTECTION STONE RIPRAP 5

2 Provide bedding material instead of filter fabric if shown elsewhere in plans. See Layout for thickness of bedding material.

3 Minimum toe depth is the larger of the maximum scour depth or 2 times the riprap thickness.

4 "Y" and Height need to be defined. See layout or detail sheet for values if this option is used.

5 List Stone Protection as size (XX inch) and thickness (YY inch) on the layout.
Example: Riprap (Stone Protection) XX inch, Thickness = YY inch.

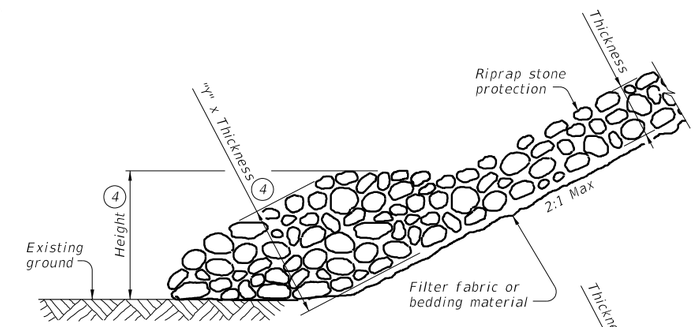

MOUNDED TOE

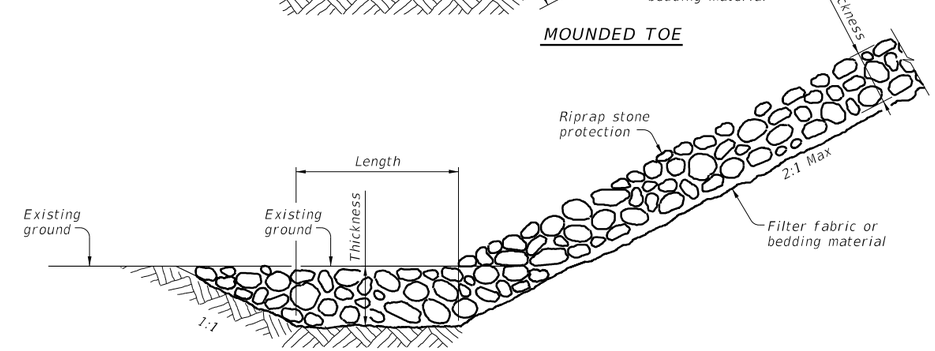

EXTENDED ROCK FILLED TRENCH

PROTECTION STONE RIPRAP TOE OPTIONS 5

SHEET 2 OF 2

Texas Department of Transportation

Bridge Division Standard

STONE RIPRAP

SRR

FILE: MS-SRR-19.dgn	DN: AES	CK: JGD	DW: BWH	CK: AES
©TxDOT April 2019	CONT	SECT	JOB	HIGHWAY
REVISIONS	0922	33	076	CS
	DIST		COUNTY	SHEET NO.
	LRD		WEBB	109

DATE:
FILE:

DISCLAIMER:
The use of this standard is governed by the "Texas Engineering Practice Act". No warranty of any kind is made by TxDOT for any purpose whatsoever. TxDOT assumes no responsibility for the conversion of this standard to other formats or for incorrect results or damages resulting from its use.

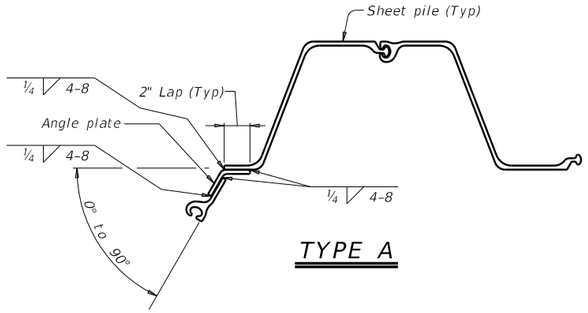

TYPE A

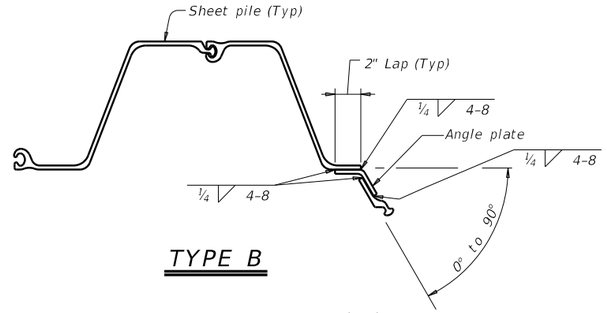

TYPE B

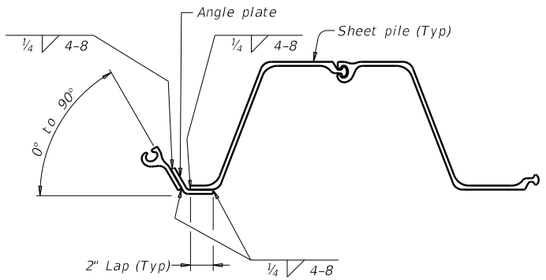

TYPE C

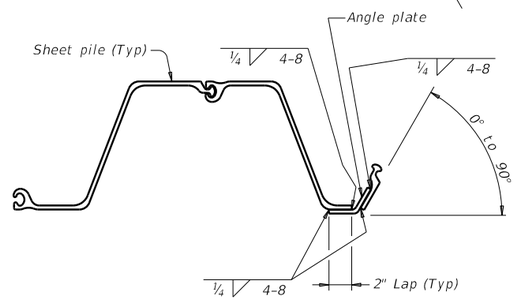

TYPE D

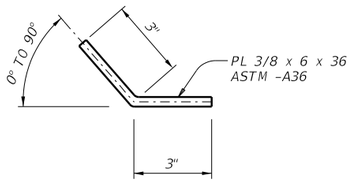

ANGLE PLATE DETAIL

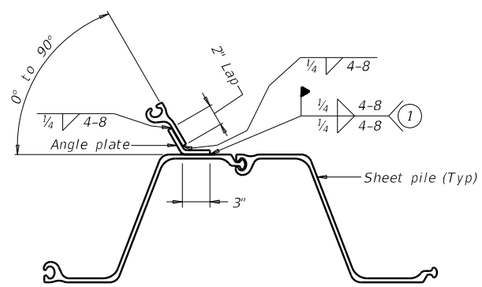

TYPE E

OPTION 1: PLATE WITH WELD

1 Remove paint at weld locations. Clean welded seam in accordance with Section 446.4.7.3.2.2. Stripe coat seam with intermediate coat and appearance coat in accordance with Item 446, "Field Cleaning and Painting Steel."

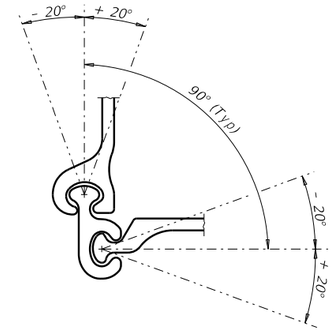

DETAIL A

(Shown PZ 90® by PilePro®)

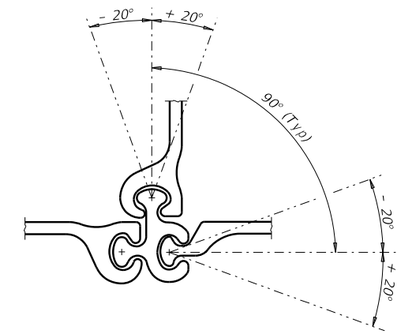

DETAIL B

(Shown PZ Tee® by PilePro®)

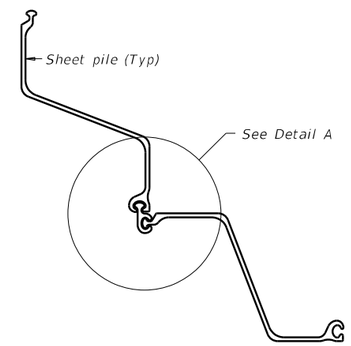

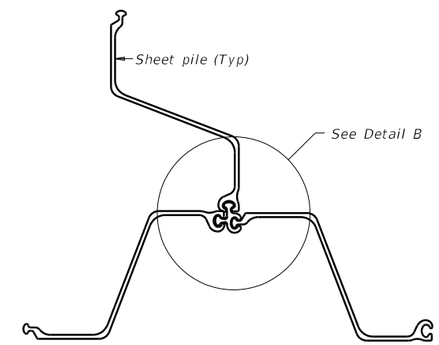

OPTION 2: PREFABRICATED

GENERAL NOTES:

The Contractor may use a prefabricated connector as shown above. The connectors shown are PZ 90® and PZ Tee®, which are produced by PilePro® (www.pilepro.com). An equivalent connector may also be used. Install the connector using the Manufacturer's guidelines. In brief, these are:

1. Thread the connector to the pile while the sheet pile is out of the ground. The connector will extend the full length of the sheet pile.
2. Tack weld the connector in place.
3. Drive the sheet pile with connector using normal procedures.

Provide sheet piling in accordance with Item 407, "Steel Piling".

Paint connector using same requirements for sheet piling, as shown elsewhere in the plans.

Texas Department of Transportation | Bridge Division Standard

STEEL SHEET PILING CORNER DETAILS

SSPC

FILE: MS-SSPC-19.dgn	DN: TxDOT	CK: JGD	DW: AMS	CK: TxDOT
©TxDOT April 2019	CONT	SECT	JOB	HIGHWAY
REVISIONS	0922	33	076	CS
	DIST		COUNTY	SHEET NO.
	LRD		WEBB	110

DATE:
FILE:

Culvert Station and/or Creek Name followed by applicable end (Lt, Rt or Both)	Description of Box Culvert No. Spans ~ Span X Height	Max Fill Height (Ft)	Applicable Box Culvert Standard (4)	Applicable Wingwall or End Treatment Standard	Skew Angle (0°,15°, 30° or 45°)	Side Slope or Channel Slope Ratio (SL:1)	T Culvert Top Slab Thickness (In)	U Culvert Wall Thickness (In)	C Estimated Curb Height (Ft)	Hw (1) Height of Wingwall (Ft)	A Curb to End of Wingwall (Ft)	B Offset of End of Wingwall (Ft)	Lw Length of Longest Wingwall (Ft)	Ltw Culvert Toewall Length (Ft)	Atw Anchor Toewall Length (Ft)	Riprap Apron (CY)	Class (2) "C" Conc (Curb) (CY)	Class (3) "C" Conc (Wingwall) (CY)	Total Wingwall Area (SF)
Sta 16+13.46, Las Cruces Curlvert - LT	7 ~ 10 X 7	3	MC-10-7	PW-1	30°	3 : 1	8	7	2.688	9.354	N/A	N/A	32.404	86.218	N/A	0.0	8.6	46.3	606
Sta 16+13.46, Las Cruces Curlvert - RT	7 ~ 10 X 7	4	MC-10-7	PW-1	30°	3 : 1	8	7	3.563	10.229	N/A	N/A	35.435	86.218	N/A	0.0	11.4	53.8	725

(1) Round the wall heights shown to the nearest foot for bidding purposes.

(2) Concrete volume shown is for box culvert curb only. For curbs using the Box Culvert Rail Mounting Details (RAC) standard sheet quantities shown must be increased by a factor of 2.25. If Class S concrete is required for the top slab of the culvert, also provide Class S concrete for the curb. Curb concrete is considered part of the Box Culvert for payment.

(3) Concrete volume shown is total of wings, footings, culvert toewall (if any), anchor toewalls (if any) and wingwall toewalls. Riprap aprons, culverts, and curb quantities are not included.

(4) Regardless of the type of culvert shown on this sheet, the Contractor has the option of furnishing cast-in-place or precast culverts unless otherwise shown elsewhere on the plans. If the Contractor elects to provide culverts of a different type than those shown on this sheet, it is the Contractor's responsibility to make the necessary adjustments to the dimensions and quantities shown.

NOTES:
Skew = 0° on SW-0, FW-0, SETB-CD, SETB-SW-0, and SETB-FW-0 standard sheets;
30° maximum for safety end treatment

SL:1 = Horizontal : 1 Vertical
- Side slope at culvert for flared or straight wingwalls.
- Channel slope for parallel wingwalls.
- Slope must be 3:1 or flatter for safety end treatments.

T = Box culvert top slab thickness. Dimension can be found on the applicable box culvert standard sheet.

U = Box culvert wall thickness. Dimension can be found on the applicable box culvert standard sheet.

C = Curb height

See applicable wing or end treatment standard sheets for calculations of Hw, A, B, Lw, Ltw, Atw, and Total Wingwall Area.

Hw = Height of wingwall

A = Distance from face of curb to end of wingwall (not applicable to parallel or straight wingwalls)

B = Offset of end of wingwall (not applicable to parallel or straight wingwalls)

Lw = Length of longest wingwall.

Ltw = Length of culvert toewall (not applicable when using riprap apron)

Atw = Length of anchor toewall (applicable to safety end treatment only)
Total Wingwall Area = Wingwall area in sq. ft. for two wingwalls (one structure end) if Lt or Rt.
Area for four wingwalls (two structure ends) if Both.

SPECIAL NOTE:

This sheet is a supplement to the box culvert standards. It is to be filled out by the culvert specifier and provides dimensions for the construction of the box culvert wingwalls and safety end treatments.

An Excel 2010 spreadsheet to assist in completing this table can be downloaded from the Bridge Standards (English) web page on the TxDOT web site. The completed sheet must be signed, sealed, and dated by a licensed Professional Engineer.

STATE OF TEXAS
KYLE GASS
94833
LICENSED
PROFESSIONAL ENGINEER

KYLE GASS, P.E.
7/31/2025

Texas Department of Transportation

Bridge Division Standard

BOX CULVERT SUPPLEMENT
WINGS AND END TREATMENTS

BCS

FILE: CD-BCS-20.dgn	DN: TxDOT	CK: TxDOT	DW: TxDOT	CK: TxDOT
©TxDOT February 2020	CONT	SECT	JOB	HIGHWAY
REVISIONS	0922	33	076	CS
	DIST		COUNTY	SHEET NO.
	LRD		WEBB	111

DISCLAIMER:
The use of this standard is governed by the "Texas Engineering Practice Act". No warranty of any kind is made by TxDOT for any purpose whatsoever. TxDOT assumes no responsibility for the conversion of this standard to other formats or for incorrect results or damages resulting from its use.

DATE:
FILE:

DISCLAIMER:
The use of this standard is governed by the "Texas Engineering Practice Act". No warranty of any kind is made by TxDOT for any purpose whatsoever.
TxDOT assumes no responsibility for the conversion of this standard to other formats or for incorrect results or damages resulting from its use.

TABLE OF DIMENSIONS AND REINFORCING STEEL
(Wings for one structure end)

Dimensions					Variable Reinforcing				Estimated Quantities per ft of wing (2~wings) (4)		Estimated Quantities per ft of Toewall (1~toewall)	
Maximum Wingwall Height Hw	W	X	Y	Z	Bars J1		Bars J2					
					Size	Spa	Size	Spa	Reinf Lb/Ft)	Conc (CY/Ft)	Reinf (Lb/Ft)	Conc (CY/Ft)
2'-6"	2'-10"	10"	1'-0"	7"	#4	1'-0"	#4	1'-0"	48.64	0.406	6.85	0.071
2'-9"	2'-10"	10"	1'-0"	7"	#4	1'-0"	#4	1'-0"	49.31	0.424	6.85	0.071
3'-0"	2'-10"	10"	1'-0"	7"	#4	1'-0"	#4	1'-0"	49.98	0.444	6.85	0.071
3'-3"	2'-10"	10"	1'-0"	7"	#4	1'-0"	#4	1'-0"	53.32	0.462	6.85	0.071
3'-6"	2'-10"	10"	1'-0"	7"	#4	1'-0"	#4	1'-0"	53.98	0.480	6.85	0.071
4'-0"	3'-2"	1'-2"	1'-0"	7"	#4	1'-0"	#4	1'-0"	55.77	0.532	6.85	0.071
4'-6"	3'-2"	1'-2"	1'-0"	7"	#4	1'-0"	#4	1'-0"	59.77	0.568	6.85	0.071
5'-0"	3'-9"	1'-7"	1'-2"	7"	#4	1'-0"	#4	1'-0"	63.45	0.632	6.96	0.075
5'-6"	3'-9"	1'-7"	1'-2"	7"	#4	1'-0"	#4	1'-0"	67.46	0.668	6.96	0.075
6'-0"	4'-4"	2'-0"	1'-4"	7"	#5	1'-0"	#5	1'-0"	80.67	0.730	7.07	0.078
6'-6"	4'-4"	2'-0"	1'-4"	7"	#5	1'-0"	#5	1'-0"	85.05	0.768	7.07	0.078
7'-0"	5'-0"	2'-3"	1'-9"	8"	#5	1'-0"	#5	1'-0"	92.15	0.864	8.07	0.093
7'-6"	5'-0"	2'-3"	1'-9"	8"	#5	1'-0"	#5	1'-0"	96.54	0.902	8.07	0.093
8'-0"	5'-6"	2'-8"	1'-10"	8"	#5	6"	#5	6"	139.04	0.962	8.13	0.095
8'-6"	5'-6"	2'-8"	1'-10"	8"	#5	6"	#5	6"	144.47	1.000	8.13	0.095
9'-6"	6'-0"	2'-10"	2'-2"	9"	#5	6"	#5	6"	156.93	1.136	8.41	0.110
10'-6"	6'-5"	3'-0"	2'-5"	9"	#6	6"	#5	6"	196.27	1.234	8.57	0.117
11'-6"	7'-2"	3'-6"	2'-8"	11"	#6	6"	#6	6"	230.13	1.438	9.52	0.140
12'-6"	7'-8"	3'-9"	2'-11"	1'-0"	#7	6"	#6	6"	283.41	1.592	9.74	0.157
13'-6"	8'-2"	4'-0"	3'-2"	1'-2"	#8	6"	#6	6"	348.72	1.804	10.02	0.186
14'-6"	8'-10"	4'-5"	3'-5"	1'-4"	#9	6"	#6	6"	432.94	2.046	10.30	0.218
15'-6"	9'-6"	4'-10"	3'-8"	1'-6"	#9	6"	#7	6"	489.52	2.302	11.24	0.253
16'-0"	9'-11"	5'-0"	3'-11"	1'-7"	#9	6"	#7	6"	505.72	2.448	11.47	0.279

TABLE OF WINGWALL REINFORCING
(2~wings)

Bar	Size	No.	Spa
D1	#6	~	1'-0"
D2	#6	~	1'-0"
E1	#4	~	1'-0"
F	#4	~	1'-0"
G	#6	~	8"
M1	#4	4	~
P	#4	~	1'-0"
V	#4	~	1'-0"

TABLE OF TOEWALL REINFORCING

Bar	Size	No.	Spa
J3	#4	~	1'-0"
M2	#4	2	~
E2	#4	~	1'-0"

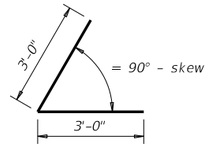

BARS D1

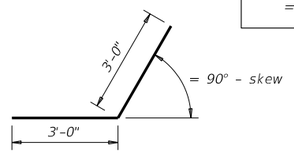

BARS D2

WING DIMENSION FORMULAS:

(All values are in feet.)

Hw = H + T + C
Lw = (Hw) (SL) ÷ cosine (θ) for Type PW-1
= (Hw - 1') (SL) ÷ cosine (θ) for Type PW-2 and Hw ≥ 4'
= (Hw - 0.5') (SL) ÷ cosine (θ) for Type PW-2 and Hw < 4'

For cast-in-place culverts:
Ltw = [(N) (S) + (N + 1) (U)] ÷ cosine (θ)

For precast culverts:
Ltw = [(N) (2 U + S) + (N - 1) (0.5')] ÷ cosine (θ)
Total Wingwall Area (two wings ~ SF)
= (2)(Hw)(Lw) for Type PW-1
= (2)(Hw)(Lw) - 6 SF for Type PW-2 and Hw ≥ 4'
= (2)(Hw)(Lw) - 1.5 SF for Type PW-2 and Hw < 4'

Hw = Height of wingwall
Lw = Length of wingwall
Ltw = Culvert toewall length
N = Number of culvert spans
SL:1 = Channel slope ratio. (horizontal: 1 vertical, usual value is 2:1)
θ = Culvert skew

See applicable box culvert standard sheet for S, H, T, and U values.

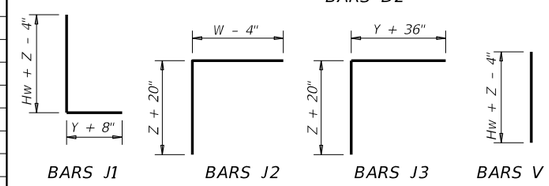

BARS J1 BARS J2 BARS J3 BARS V

1. Skew = 0°
2. At discharge end, chamfer may be ¾" minimum.
3. For 15° skew ~ 1"
   For 30° skew ~ 2"
   For 45° skew ~ 3"
4. Quantities shown are for two Type PW-1 wings. Adjust concrete volume for Type PW-2 wings. To determine estimated quantities for two wings, multiply the tabulated values by Lw. Quantities shown do not include weight of Bars D.
5. Provide weepholes for Hw = 5'-0" and greater. Fill around weepholes with coarse gravel.
6. Extend Bars E2 1'-6" minimum into the wingwall footing.
7. Lap Bars M1 1'-6" minimum with Bars M2.
8. Place Bars G as shown, equally spaced at 8" maximum. Provide at least two pairs of Bars G per wing.
9. 0" Min to 5'-0" Max. Estimated curb heights are shown elsewhere in the plans. For structures with pedestrian rail or curbs taller than 1'-0, refer to the Extended Curb Details (ECD) standard sheet. For structures with T631 or T631LS bridge rail, refer to the Mounting Details for T631 & T631LS Rails (T631-CM) standard sheet. Refer to the Box Culvert Rail Mounting Details (RAC) standard sheet for structures with bridge rail other than T631 or T631LS.
10. For vehicle safety, the following requirements must be met:
    - For structures without bridge rail, construct curbs no more than 3" above finished grade.
    - For structures with bridge rail, construct curbs flush with finished grade.

    Reduce curb heights, if necessary, to meet the above requirements. No changes will be made in quantities and no additional compensation will be allowed for this work.
11. 1'-0" typical. 2'-3" when the Box Culvert Rail Mounting Details (RAC) standard sheet is referred to elsewhere in the plans.
12. 3'-0" for Hw < 4'.
13. 6" for Hw < 4'.

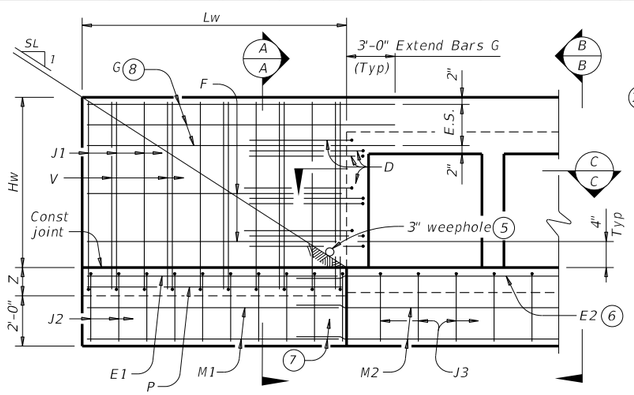

PARTIAL ELEVATION - PW-1

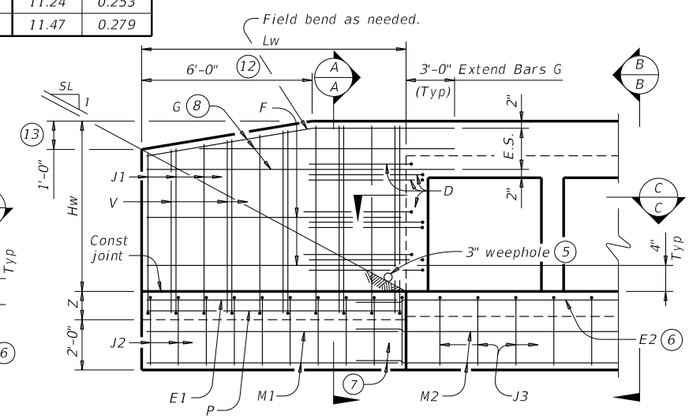

PARTIAL ELEVATION - PW-2

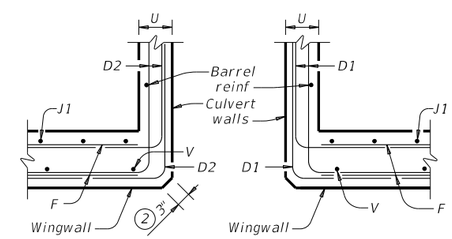

SECTION C-C - PW-1

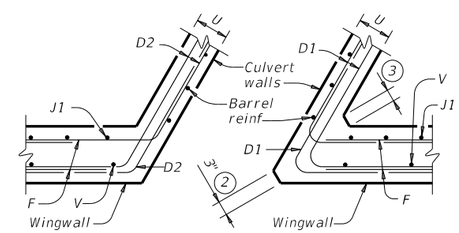

SECTION C-C - PW-2

DESIGNER NOTES:

Type PW-1 can be used for all applications and must be used if railing is to be mounted to the wingwall.
Type PW-2 can only be used for applications without a railing mounted to the wingwall.

MATERIAL NOTES:

Provide Class C concrete (f'c=3,600 psi).
Provide Grade 60 reinforcing steel.
Provide galvanized reinforcing steel if required elsewhere in the plans.

GENERAL NOTES:

Designed in accordance with AASHTO LRFD Bridge Design Specifications.
Depth of toewalls for wingwalls and culverts may be reduced or eliminated when founded on solid rock, when directed by the Engineer.
See Box Culvert Supplement (BCS) standard sheet for wingwall type and additional dimensions and information.
Quantities for concrete and reinforcing steel resulting from the formulas given on this sheet are for the Contractor's information only.

Cover dimensions are clear dimensions, unless noted otherwise. Reinforcing dimensions are out-to-out of bars.

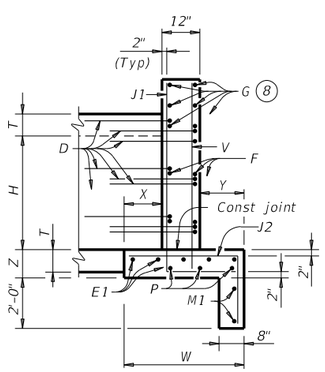

SECTION A-A
(Showing wing reinforcement.)

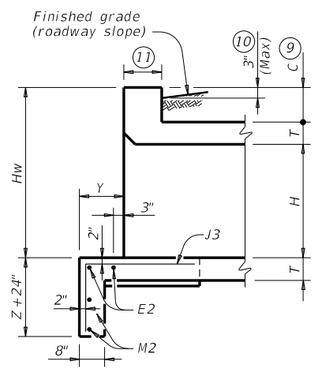

SECTION B-B
(Showing wing reinforcement.)

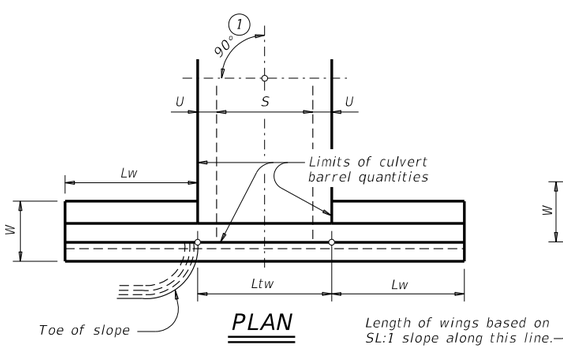

PLAN

DETAILS FOR NON-SKEWED BOX CULVERTS

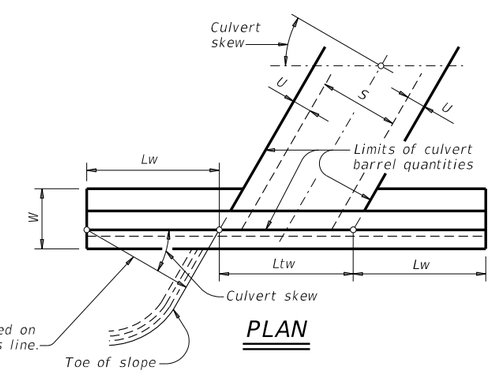

PLAN

DETAILS FOR SKEWED BOX CULVERTS
(Showing 30° skew.)

Texas Department of Transportation — Bridge Division Standard

CONCRETE WINGWALLS WITH PARALLEL WINGS FOR BOX CULVERTS TYPES PW-1 AND PW-2

PW

FILE: CD-PW-20.dgn	DN: GAF	CK: CAT	DW: TxDOT	CK: TxDOT
©TxDOT February 2020	CONT	SECT	JOB	HIGHWAY
REVISIONS	0922	33	076	CS
	DIST		COUNTY	SHEET NO.
	LRD		WEBB	112

DATE:
FILE:

DISCLAIMER:
The use of this standard is governed by the "Texas Engineering Practice Act". No warranty of any kind is made by TxDOT for any purpose whatsoever. TxDOT assumes no responsibility for the conversion of this standard to other formats or for incorrect results or damages resulting from its use.

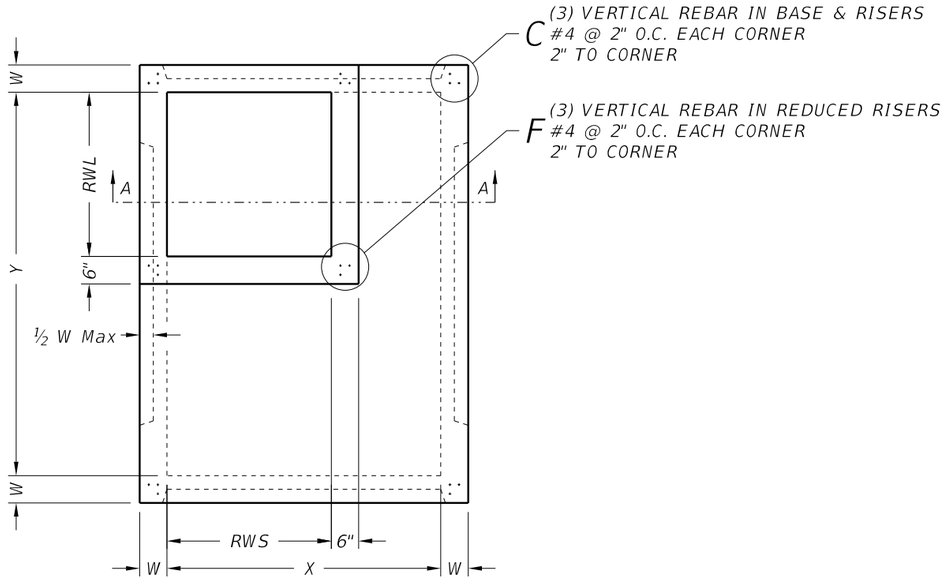

PLAN VIEW "A"

SQUARE REDUCED RISER OPTION

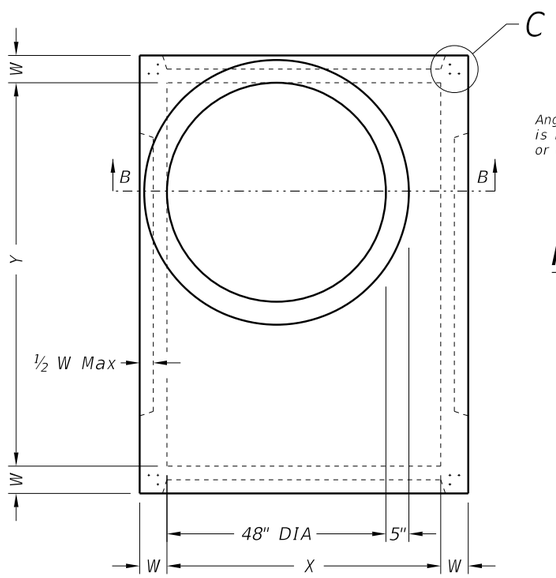

PLAN VIEW "B"

ROUND REDUCED RISER OPTION

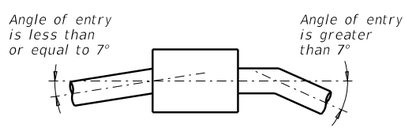

PIPE CONNECTION DETAIL

Connect pipes within 7° of normal to PB wall.
If necessary, use pipe elbow or curved
approach alignment to stay within this limit.

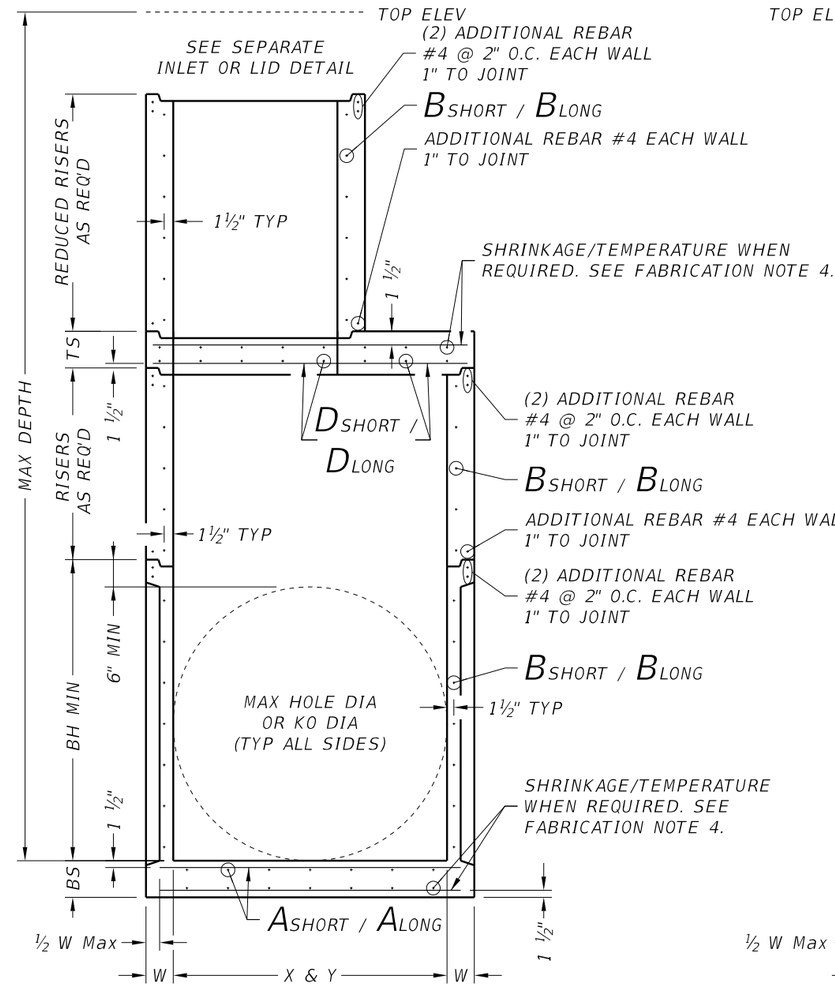

SECTION A-A

SQUARE REDUCED RISER OPTION

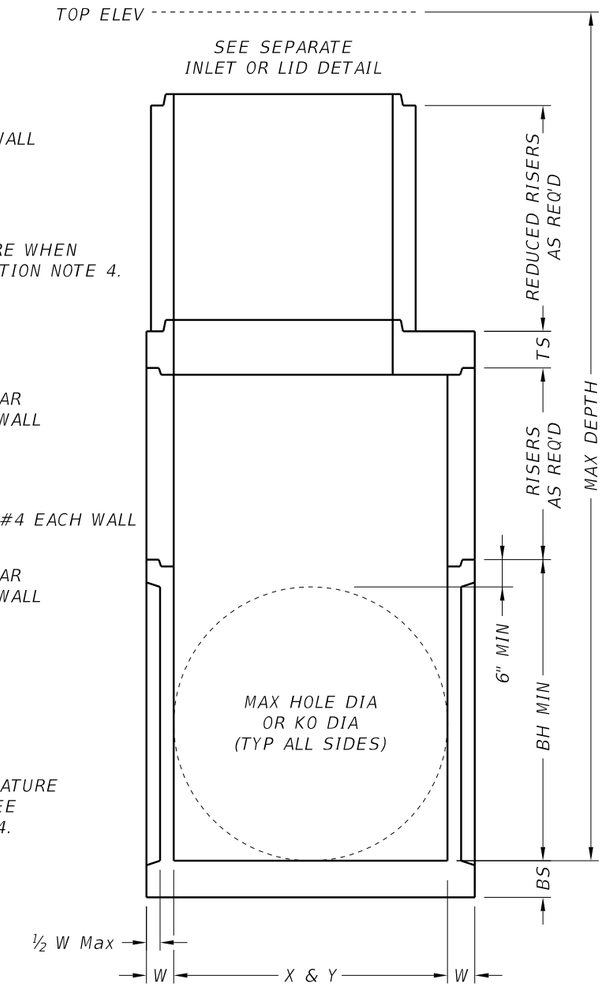

SECTION B-B

ROUND REDUCED RISER OPTION

FABRICATION NOTES:

1. Provide Class "H" concrete in accordance with Item 421 and having a minimum compressive strength of 5,000 psi.
2. Provide Grade 60 reinforcing steel or equivalent area of WWR.
3. Provide typical clear cover of 1 ½" to reinforcing steel at interior or exterior walls.
4. Walls or slabs with a thickness of 8" or greater require shrinkage and temperature reinforcing steel. Provide steel area = 0.11 in^2/ft each way.
5. No substitution is allowed for vertical and horizontal #4 bars in corners.
6. Manufacture base and risers to nearest 3" increment.
7. Design tongue and groove joints for full closure on both shoulders. Minimum spigot depth is ¾".
8. Provide lifting devices in conformance with Manufacturer's recommendations.
9. See sheet PDD for sizes, dimensions, and reinforcing steel not shown.

Cover dimensions are clear dimensions, unless noted otherwise.

INSTALLATION NOTES:

1. If required elsewhere. Inverts (benching) to be provided by Contractor. Concrete or mortar used for invert is subsidiary to specified inlet or manhole.
2. Seal tongue and groove joints with preformed or bulk mastic in conformance with Manufacturer's recommendations. Tongue and groove joints may be grouted no more than 1" between each section, or ½ the joint depth, whichever is greater.
3. Do not grout rubber gasket joints without Manufacturer's recommendation.
4. For rigid pipe, cut hole in thin wall panel (KO) 4" Max, 2" Min larger than pipe OD.
5. For flexible pipe, consult boot/seal Manufacturer's specification for placement tolerance and hole size. Center pipe in hole and install boot/seal per Manufacturer's specification.

GENERAL NOTES:

1. Precast Base consists of base slab, base unit, risers (as required), reducing slab (as required), and reduced risers (as required). See sheet PDD for sizes.
2. Designed according to ASTM C913.
3. Payment for precast base is subsidiary to the specified inlet, per Item 465, "Junction Boxes, Manholes, and Inlets."

HL93 LOADING

Texas Department of Transportation — Bridge Division Standard

PRECAST BASE

PB

FILE: CD-PB-20.dgn	DN: TxDOT	CK: TxDOT	DW: TxDOT	CK: TxDOT
©TxDOT February 2020	CONT	SECT	JOB	HIGHWAY
REVISIONS	0922	33	076	CS
	DIST		COUNTY	SHEET NO.
	LRD		WEBB	113

DATE:
FILE:

DISCLAIMER:
The use of this standard is governed by the "Texas Engineering Practice Act". No warranty of any kind is made by TxDOT for any purpose whatsoever. TxDOT assumes no responsibility for the conversion of this standard to other formats or for incorrect results or damages resulting from its use.

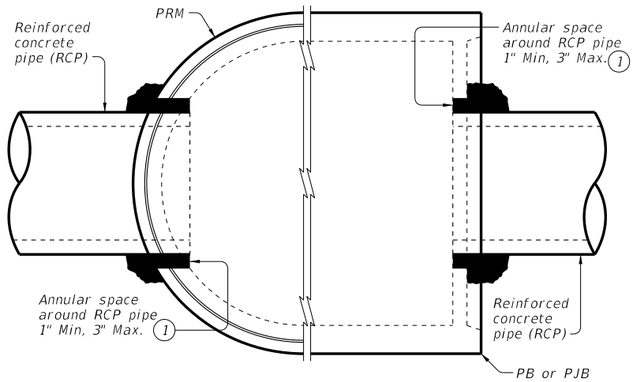

PRECAST ROUND MANHOLE (PRM) WITH THROUGH-HOLE

PRECAST BASE (PB) OR PRECAST JUNCTION BOX (PJB) WITH THIN-WALL KNOCK-OUT

TYPICAL HALF PLAN

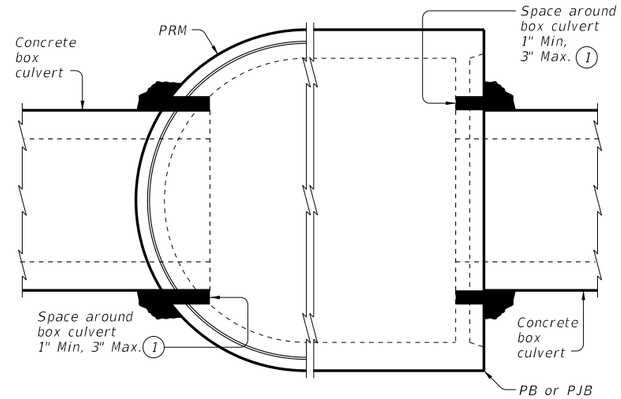

PRECAST ROUND MANHOLE (PRM) WITH THROUGH-HOLE

PRECAST BASE (PB) OR PRECAST JUNCTION BOX (PJB) WITH THIN-WALL KNOCK-OUT

TYPICAL HALF PLAN

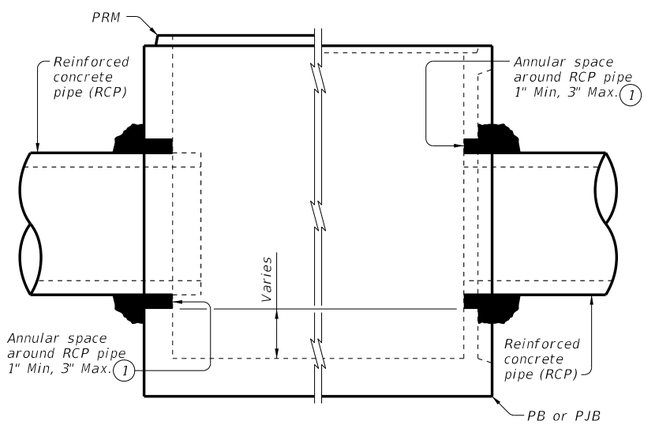

PRECAST ROUND MANHOLE (PRM) WITH THROUGH-HOLE

PRECAST BASE (PB) OR PRECAST JUNCTION BOX (PJB) WITH THIN-WALL KNOCK-OUT

TYPICAL HALF ELEVATION

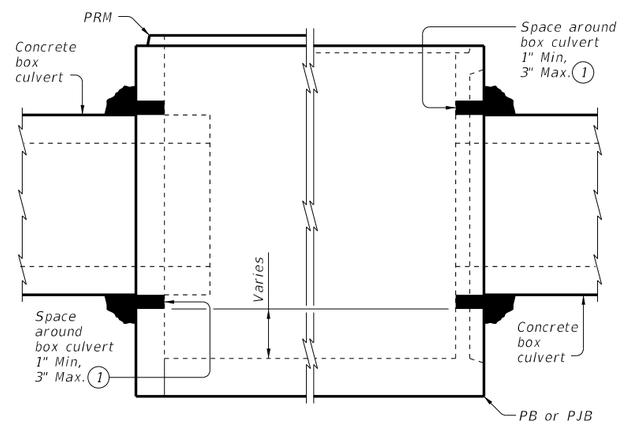

PRECAST ROUND MANHOLE (PRM) WITH THROUGH-HOLE

PRECAST BASE (PB) OR PRECAST JUNCTION BOX (PJB) WITH THIN-WALL KNOCK-OUT

TYPICAL HALF ELEVATION

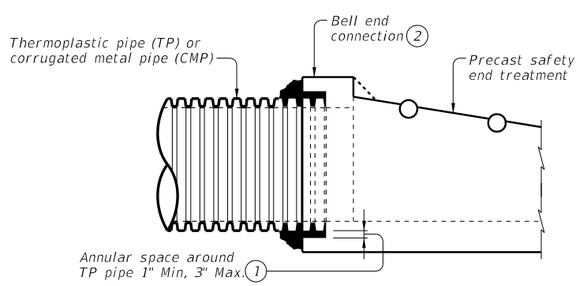

TYPICAL PARTIAL ELEVATION OF PRECAST SAFETY END TREATMENTS

Showing square PSET for parallel drainage, cross drainage shown similar.

(1) Completely fill the void between the precast structure and the connecting pipe or box with cementitious grouts and mortars in accordance with DMS-4675 "Cementitious Grouts and Mortars for Miscellaneous Application."

(2) For thermoplastic pipe, do not use bell or spigot for grouted connections. Remove the bell or spigot from the pipe by cutting between two exterior corrugations of the pipe before connecting and grouting the thermoplastic pipe to the structure.

CONSTRUCTION NOTES:

Do not grout rubber gasket joints without Manufacturer's recommendations.

Do not use bricks, masonry blocks, native stone, or similar materials in conjunction with grouted connections when filling void spaces around pipes or box culverts.

MATERIAL NOTES:

Provide grouted connections in accordance with DMS-4675, "Cementitious Grouts and Mortars for Miscellaneous Application."

GENERAL NOTES:

See applicable standards for notes and details not shown:
- Precast Base (PB)
- Precast Junction Box (PJB)
- Precast Round Manhole (PRM)
- Precast Safety End Treatments C/D Square (PSET-SC)
- Precast Safety End Treatments P/D Square (PSET-SP)

Provide Concrete Box Culverts in accordance with Item 462, "Concrete Box Culverts and Drains."

Provide Reinforced Concrete Pipe (RCP) in accordance with Item 464, "Reinforced Concrete Pipe."

Provide Thermoplastic Pipe (TP) in accordance with Item 468, "Thermoplastic Pipe Culverts and Drains".

Payment for grouted connections is considered subsidiary to other bid Items.

Texas Department of Transportation — Bridge Division Standard

PIPE AND BOX GROUTED CONNECTIONS FOR PRECAST STRUCTURES

PBGC

FILE: CD-PBGC-24.dgn	DN: TxDOT	CK: TAR	DW: JTR	CK: TAR
©TxDOT February 2020	CONT	SECT	JOB	HIGHWAY
REVISIONS	0922	33	076	CS
06-2024: Updated notes.	DIST		COUNTY	SHEET NO.
	LRD		WEBB	114

DATE:
FILE:

DISCLAIMER:
The use of this standard is governed by the "Texas Engineering Practice Act". No warranty of any kind is made by TxDOT for any purpose whatsoever. TxDOT assumes no responsibility for the conversion of this standard to other formats or for incorrect results or damages resulting from its use.

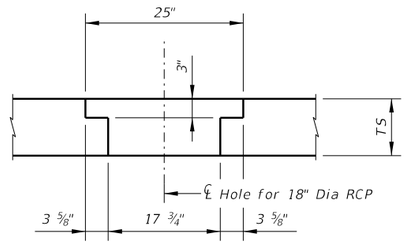

DETAIL "B"

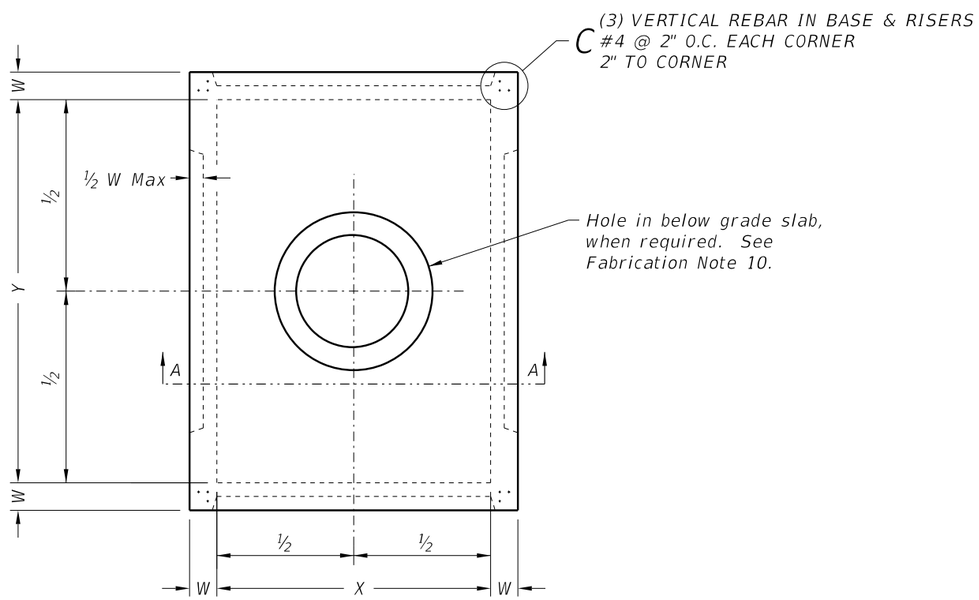

PLAN VIEW

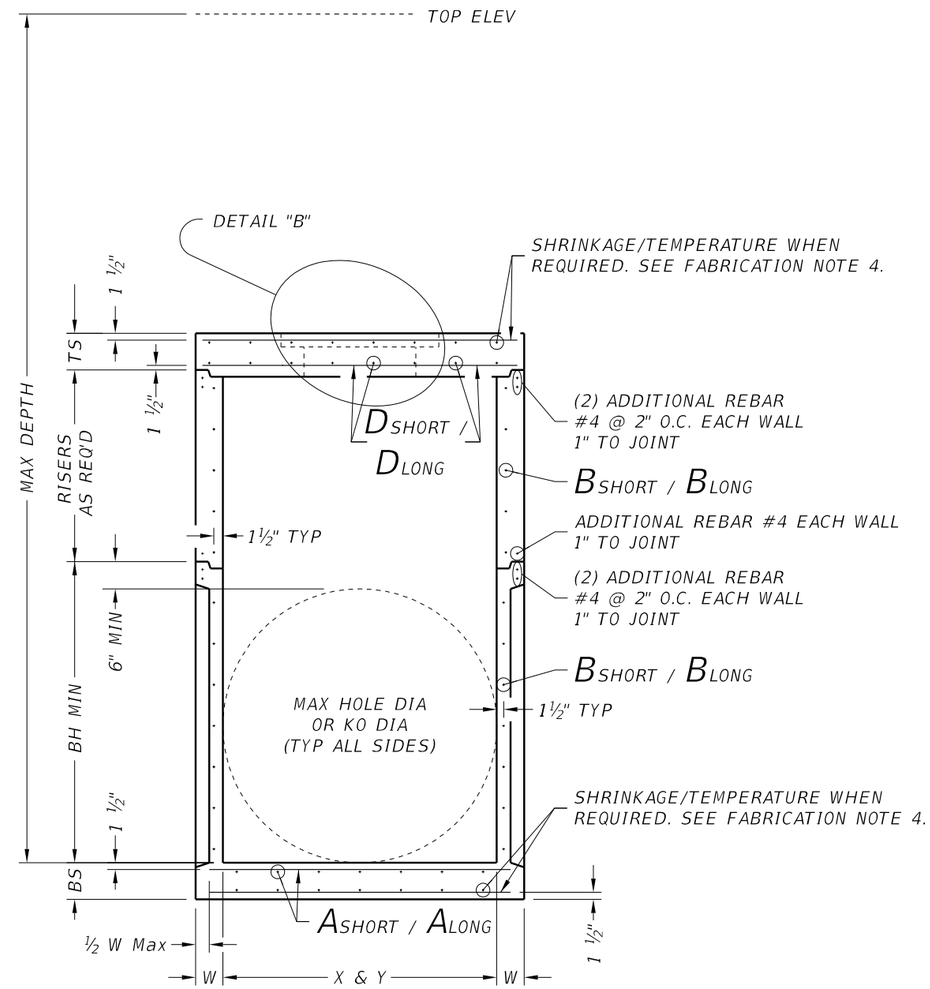

SECTION A-A

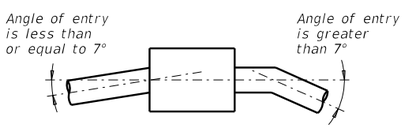

PIPE CONNECTION DETAIL

Connect pipes within 7° of normal to PJB wall. If necessary, use pipe elbow or curved approach alignment to stay within this limit.

FABRICATION NOTES:

1. Provide Class "H" concrete in accordance with Item 421 and having a minimum compressive strength of 5,000 psi.
2. Provide Grade 60 reinforcing steel or equivalent area of WWR.
3. Provide typical clear cover of 1 ½" to reinforcing steel at interior or exterior walls.
4. Walls or slabs with a thickness of 8" or greater require shrinkage and temperature reinforcing steel. Provide steel area = 0.11 in^2/ft each way.
5. No substitution is allowed for vertical and horizontal #4 bars in corners.
6. Manufacture base and risers to nearest 3" increment.
7. Design tongue and groove joints for full closure on both shoulders. Minimum spigot depth is ¾".
8. Provide lifting devices in conformance with Manufacturer's recommendations.
9. See sheet PDD for sizes, dimensions, and reinforcing steel not shown.
10. Provide hole in below grade slab only when PJB is installed with inlet type POD.

INSTALLATION NOTES:

1. Inverts (benching) to be provided by Contractor. Concrete or mortar used for invert is subsidiary to junction box.
2. Seal tongue and groove joints with preformed or bulk mastic in conformance with Manufacturer's recommendations. Tongue and groove joints may be grouted no more than 1" between each section, or ½ the joint depth, whichever is greater.
3. Do not grout rubber gasket joints without Manufacturer's recommendation.
4. For rigid pipe, cut hole in thin wall panel (KO) 4" Max, 2" Min larger than pipe OD.
5. For flexible pipe, consult boot/seal Manufacturer's specification for placement tolerance and hole size. Center pipe in hole and install boot/seal per Manufacturer's specification.

GENERAL NOTES:

1. Precast Junction Box consists of base slab, base unit, risers (as required), and below grade slab. See sheet PDD for sizes.
2. Designed according to ASTM C913.
3. Payment for junction box is per Item 465 "Junction Boxes, Manholes, and Inlets" by type and size.

Cover dimensions are clear dimensions, unless noted otherwise.

HL93 LOADING

Texas Department of Transportation — Bridge Division Standard

PRECAST JUNCTION BOX

PJB

FILE: CD-PJB-20.dgn	DN: TxDOT	CK: TxDOT	DW: TxDOT	CK: TxDOT
©TxDOT February 2020	CONT	SECT	JOB	HIGHWAY
REVISIONS	0922	33	076	CS
	DIST		COUNTY	SHEET NO.
	LRD		WEBB	115

DATE:
FILE:

	Size	MAX DEPTH = 15 ft. to top of BASE SLAB										MAX DEPTH = 25 ft. to top of BASE SLAB										Min Height (See Gen Note 3)	Max HOLE DIA (See Fab Note 2)	Max KO DIA (See Fab Note 2)
		Base Slab			Base Unit or Riser Walls			Below Grade Slab (w/PJB) Reducing Slab (w/PB)				Base Slab			Base Unit or Riser Walls			Below Grade Slab (w/PJB) Reducing Slab (w/PB)						
		Short Span Reinf Steel Area	Long Span Reinf Steel Area	Thickness	Short Span Reinf Steel Area	Long Span Reinf Steel Area	Thickness	Reduced Riser Size	Short Span Reinf Steel Area	Long Span Reinf Steel Area	Thickness	Short Span Reinf Steel Area	Long Span Reinf Steel Area	Thickness	Short Span Reinf Steel Area	Long Span Reinf Steel Area	Thickness	Reduced Riser Size	Short Span Reinf Steel Area	Long Span Reinf Steel Area	Thickness			
	X x Y	Ashort	Along	BS	Bshort	Blong	W	RWSxRWL or ID	Dshort	Dlong	TS	Ashort	Along	BS	Bshort	Blong	W	RWSxRWL or ID	Dshort	Dlong	TS	BH MIN	HOLE DIA	KO DIA
	ft.	in^2/ft	in^2/ft	in.	in^2/ft	in^2/ft	in.	ft. **	in^2/ft	in^2/ft	in.	in^2/ft	in^2/ft	in.	in^2/ft	in^2/ft	in.	ft. **	in^2/ft	in^2/ft	in.	ft.	in.	in.
Precast Junction Box (PJB)	3x3	0.23	0.23	6	0.19	0.19	6	N/A	0.37	0.37	9	0.29	0.29	6	0.24	0.24	6	N/A	0.37	0.37	9	3.5	36	36
	4x4	0.29	0.29	6	0.24	0.24	6	N/A	0.41	0.41	9	0.47	0.47	6	0.38	0.38	6	N/A	0.41	0.41	9	4.5	48	48
	3x5	0.29	0.18	6	0.19	0.35	6	N/A	0.48	0.48	9	0.39	0.18	6	0.23	0.59	6	N/A	0.48	0.48	9	3.5	36/60	36/60
	4x5	0.36	0.18	6	0.22	0.34	6	N/A	0.42	0.42	9	0.53	0.26	6	0.39	0.59	6	N/A	0.42	0.42	9	4.5	48/60	48/60
	5x5	0.36	0.36	6	0.34	0.34	6	N/A	0.43	0.43	9	0.62	0.62	6	0.59	0.59	6	N/A	0.43	0.43	9	5.5	60	60
	5x6	0.27	0.27	9	0.34	0.45	6	N/A	0.48	0.48	9	0.47	0.45	9	0.38	0.54	8	N/A	0.48	0.48	9	5.5	60/72	60/72
	6x6	0.27	0.27	9	0.45	0.45	6	N/A	0.56	0.56	9	0.52	0.52	9	0.54	0.54	8	N/A	0.56	0.56	9	6.5	72	72
	8x8	0.46	0.46	9	0.51	0.51	8	N/A	0.45	0.45	12	0.87	0.87	9	0.59	0.59	10	N/A	0.45	0.45	12	8.5	96	72
Precast Base (PB)	3x3	0.23	0.23	6	0.19	0.19	6	N/A	N/A	N/A	N/A	0.29	0.29	6	0.24	0.24	6	N/A	N/A	N/A	N/A	3.5	36	36
	4x4	0.29	0.29	6	0.24	0.24	6	N/A	N/A	N/A	N/A	0.47	0.47	6	0.38	0.38	6	N/A	N/A	N/A	N/A	4.5	48	48
	3x5	0.29	0.18	6	0.19	0.35	6	3x3	0.30	0.34	9	0.39	0.18	6	0.23	0.59	6	3x3	0.40	0.40	9	3.5	36/60	36/60
	4x5	0.36	0.18	6	0.22	0.34	6	3x3	0.30	0.30	9	0.53	0.26	6	0.39	0.59	6	3x3	0.46	0.37	9	4.5	48/60	48/60
	4x5	0.36	0.18	6	0.22	0.34	6	4x4	0.30	0.30	9	0.53	0.26	6	0.39	0.59	6	4x4	0.39	0.39	9	4.5	48/60	48/60
	4x5	0.36	0.18	6	0.22	0.34	6	48"	0.39	0.39	9	0.53	0.26	6	0.39	0.59	6	48"	0.47	0.47	9	4.5	48/60	48/60
	4x5	0.36	0.18	6	0.22	0.34	6	3x5	0.33	0.40	9	0.53	0.26	6	0.39	0.59	6	3x5	0.48	0.48	9	4.5	48/60	48/60
	5x5	0.36	0.36	6	0.34	0.34	6	3x3	0.34	0.34	9	0.62	0.62	6	0.59	0.59	6	3x3	0.53	0.53	9	5.5	60	60
	5x5	0.36	0.36	6	0.34	0.34	6	4x4	0.36	0.36	9	0.62	0.62	6	0.59	0.59	6	4x4	0.64	0.64	9	5.5	60	60
	5x5	0.38	0.38	6	0.34	0.34	6	48"	0.36	0.36	9	0.62	0.62	6	0.59	0.59	6	48"	0.64	0.64	9	5.5	60	60
	5x5	0.36	0.36	6	0.34	0.34	6	3x5	0.34	0.40	9	0.62	0.62	6	0.59	0.59	6	3x5	0.53	0.53	9	5.5	60	60
	5x6	0.31	0.31	9	0.34	0.45	6	3x3	0.34	0.34	9	0.47	0.45	9	0.38	0.54	8	3x3	0.61	0.50	9	5.5	60/72	60/72
	5x6	0.27	0.27	9	0.34	0.45	6	4x4	0.36	0.45	9	0.47	0.45	9	0.38	0.54	8	4x4	0.74	0.57	9	5.5	60/72	60/72
	5x6	0.29	0.29	9	0.34	0.45	6	48"	0.36	0.45	9	0.47	0.45	9	0.38	0.54	8	48"	0.74	0.57	9	5.5	60/72	60/72
	5x6	0.29	0.29	9	0.34	0.45	6	3x5	0.45	0.45	9	0.47	0.45	9	0.38	0.54	8	3x5	0.61	0.61	9	5.5	60/72	60/72
	6x6	0.29	0.29	9	0.45	0.45	6	3x3	0.41	0.41	9	0.52	0.52	9	0.54	0.54	8	3x3	0.74	0.74	9	6.5	72	72
	6x6	0.27	0.27	9	0.45	0.45	6	4x4	0.45	0.45	9	0.52	0.52	9	0.54	0.54	8	4x4	0.87	0.87	9	6.5	72	72
	6x6	0.29	0.29	9	0.45	0.45	6	48"	0.45	0.45	9	0.52	0.52	9	0.54	0.54	8	48"	0.87	0.87	9	6.5	72	72
	6x6	0.29	0.29	9	0.45	0.45	6	3x5	0.45	0.45	9	0.52	0.52	9	0.54	0.54	8	3x5	0.87	0.87	9	6.5	72	72
	8x8	0.52	0.52	9	0.51	0.51	8	3x3	0.61	0.61	12	0.91	0.91	9	0.70	0.70	10	3x3	0.85	0.85	12	8.5	96	72
	8x8	0.52	0.52	9	0.51	0.51	8	4x4	0.70	0.70	12	0.87	0.87	9	0.70	0.70	10	4x4	1.01	1.01	12	8.5	96	72
	8x8	0.52	0.52	9	0.51	0.51	8	48"	0.70	0.70	12	0.87	0.87	9	0.70	0.70	10	48"	1.01	1.01	12	8.5	96	72
	8x8	0.52	0.52	9	0.51	0.51	8	3x5	0.70	0.85	12	0.87	0.87	9	0.70	0.70	10	3x5	1.01	1.01	12	8.5	96	72

** Unless otherwise indicated.

FABRICATION NOTES:
1. Maximum spacing of reinforcement is 8".
2. At manufacturer's option, provide cast or cored holes or thin wall panels (KO) to the maximum diameter shown for each. When no penetration is required, it is acceptable to provide a wall with no sectional reduction.

GENERAL NOTES:
1. Precast Junction Box consists of base slab, base unit, risers (as required), and below grade slab. See sheet PJB for details.
2. Precast Base consists of base slab, base unit, risers (as required), reducing slab (as required), and reduced risers (as required). See sheet PB for details.
3. Min Height shown is for stock base units. Use stock base units whenever practical. Smaller height base units can be used in special installation circumstances, when noted elsewhere in the plans. Absolute minimum height of base units is 2'-6".

HL93 LOADING

Texas Department of Transportation — Bridge Division Standard

DESIGN DATA FOR PRECAST BASE AND JUNCTION BOX

PDD

FILE: CD-PDD-20.dgn	DN: TxDOT	CK: TxDOT	DW: TxDOT	CK: TxDOT
©TxDOT February 2020	CONT	SECT	JOB	HIGHWAY
REVISIONS	0922	33	076	CS
	DIST		COUNTY	SHEET NO.
	LRD		WEBB	116

DISCLAIMER:
The use of this standard is governed by the "Texas Engineering Practice Act". No warranty of any kind is made by TxDOT for any purpose whatsoever. TxDOT assumes no responsibility for the conversion of this standard to other formats or for incorrect results or damages resulting from its use.

DATE:
FILE:

DISCLAIMER:
The use of this standard is governed by the "Texas Engineering Practice Act". No warranty of any kind is made by TxDOT for any purpose whatsoever. TxDOT assumes no responsibility for the conversion of this standard to other formats or for incorrect results or damages resulting from its use.

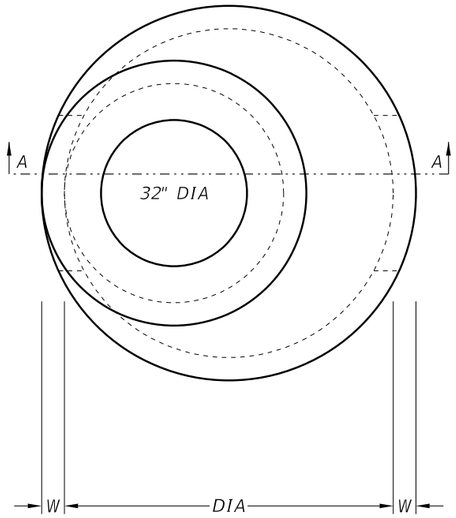

PLAN VIEW "A"

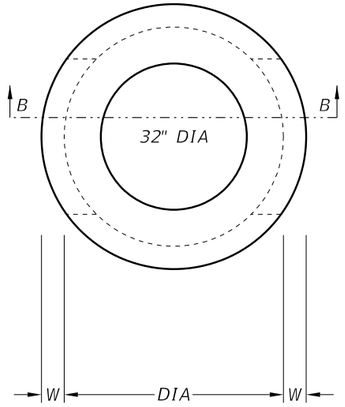

PLAN VIEW "B"

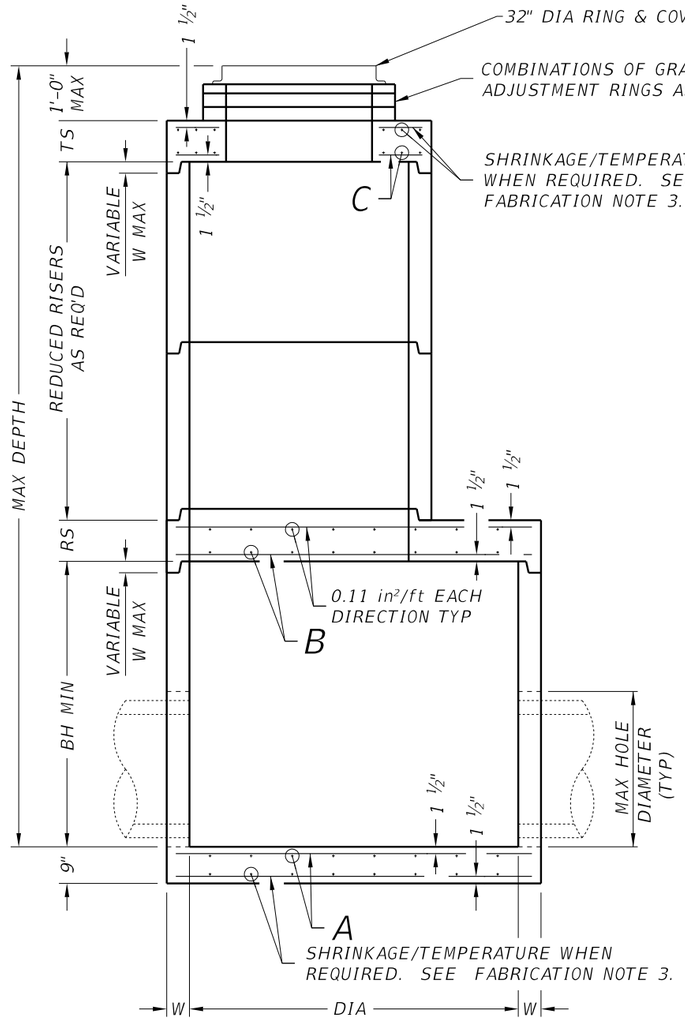

SECTION A-A

ROUND REDUCED RISER OPTION
SHOWING FLAT SLAB TOP

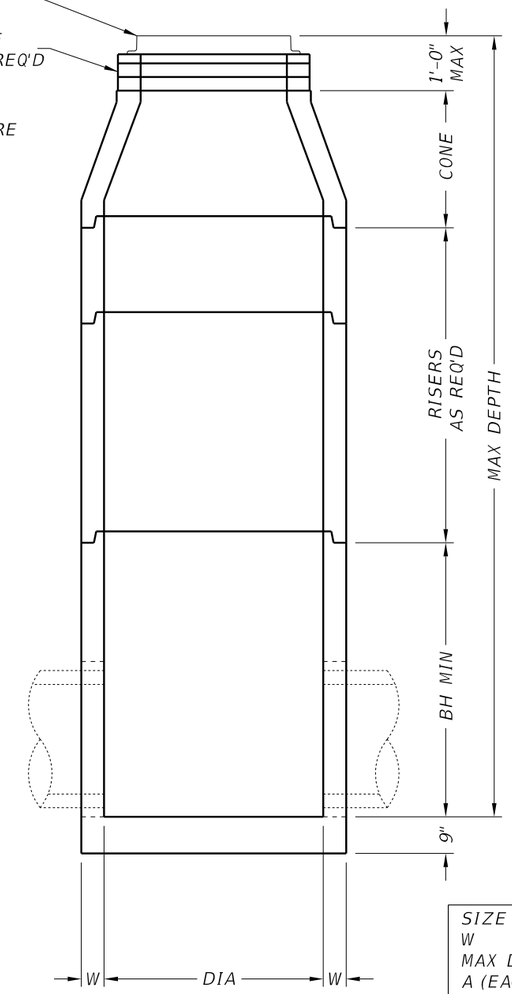

SECTION B-B

ROUND RISER OPTION
SHOWING CONE

FABRICATION NOTES:

1. Provide Class "H" concrete in accordance with Item 421 and having a minimum compressive strength of 5,000 psi.
2. Provide Grade 60 reinforcing steel or equivalent area of WWR. Provide circumferential reinforcing steel in vertical walls of base, riser and cone in accordance with ASTM C478.
3. Slabs with a thickness of 8" or greater require shrinkage and temperature reinforcing steel. Provide steel area = 0.11 in²/ft each way.
4. Manufacture base and risers to nearest 3" increment.
5. Design tongue and groove joints for full closure on both shoulders. Minimum spigot depth is ¾".
6. Provide lifting devices in conformance with Manufacturer's recommendations.
7. Provide cast iron solid cover, unless noted otherwise elsewhere in the plans.

INSTALLATION NOTES:

1. Cones may be concentric or eccentric. Reduction cones are acceptable. See Manufacturer for cone dimensions.
2. Inverts (benching) to be provided by Contractor. Concrete or mortar used for invert is subsidiary to this item.
3. Seal tongue and groove joints with preformed or bulk mastic in conformance with Manufacturer's recommendations. Tongue and groove joints may be grouted no more than 1" between each section, or ½ the joint depth, whichever is greater.
4. Do not grout rubber gasket joints without Manufacturer's recommendation.
5. Initial installation of grade adjustment rings is limited to 1'-0" Max as shown.
6. Grade adjustment rings may be increased to 2'-0" Max when future construction affects final grade of structure. Make adjustments greater than 2'-0" with additional risers. Adjustments may be made up to the Max depth shown. Structure must be evaluated if Max depth will be exceeded.

GENERAL NOTES:

1. Designed according to ASTM C478.
2. Payment for manhole is per Item 465, "Junction Boxes, Manholes, and Inlets" by type and size.
3. Pipe OD + placement tolerance must be equal or less than Max hole diameter. For rigid pipe, placement tolerance is 4" Max, 2" Min. For flexible pipe, consult boot/seal manufacturer's specification for placement tolerance.

Cover dimensions are clear dimensions, unless noted otherwise.

SIZE (DIA)	48 in	60 in	72 in
W	5 in	6 in	7 in
MAX DEPTH	25 ft	25 ft	25 ft
A (EACH WAY)	0.22 in²/ft	0.30 in²/ft	0.45 in²/ft
B (EACH WAY)	N/A	0.37 in²/ft	0.62 in²/ft
C (EACH WAY)	0.24 in²/ft	0.46 in²/ft	0.46 in²/ft
BH MIN	12 in	36 in	36 in
TS	9 in	9 in	9 in
RS	N/A	9 in	12 in
REDUCED RISER DIA	N/A	48 in	48/60 in
MAX HOLE DIA	32 in	40 in	54 in

HL93 LOADING

Texas Department of Transportation — Bridge Division Standard

PRECAST ROUND MANHOLE

PRM

FILE: CD-PRM-23.dgn	DN: TxDOT	CK: TxDOT	DW: TxDOT	CK: TxDOT
©TxDOT February 2020	CONT	SECT	JOB	HIGHWAY
REVISIONS 3/2023 – Corrected TS and RS callout	0922	33	076	CS
	DIST		COUNTY	SHEET NO.
	LRD		WEBB	117

DATE:
FILE:

DISCLAIMER:
The use of this standard is governed by the "Texas Engineering Practice Act". No warranty of any kind is made by TxDOT for any purpose whatsoever. TxDOT assumes no responsibility for the conversion of this standard to other formats or for incorrect results or damages resulting from its use.

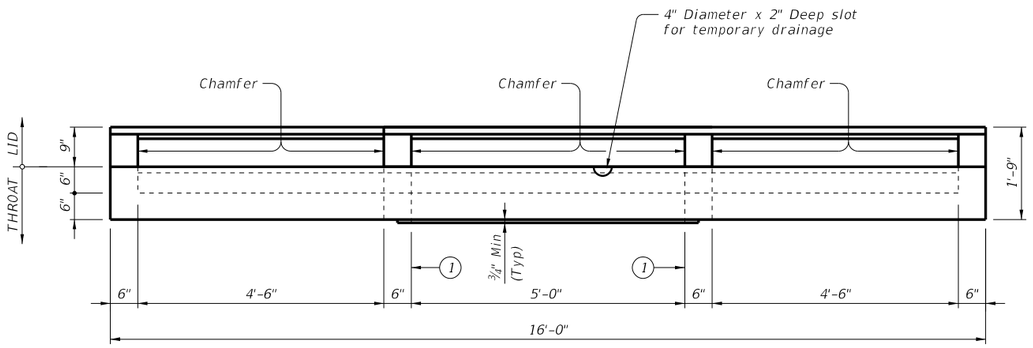

FRONT VIEW

(Showning left and right extensions)

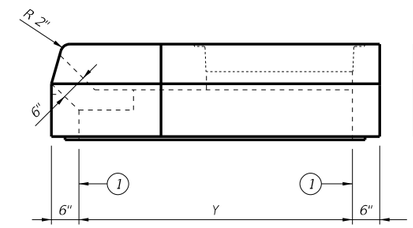

RIGHT VIEW

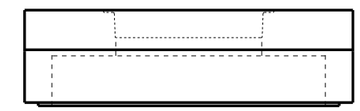

REAR VIEW

(Extensions not shown)

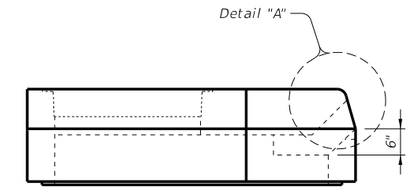

LEFT VIEW

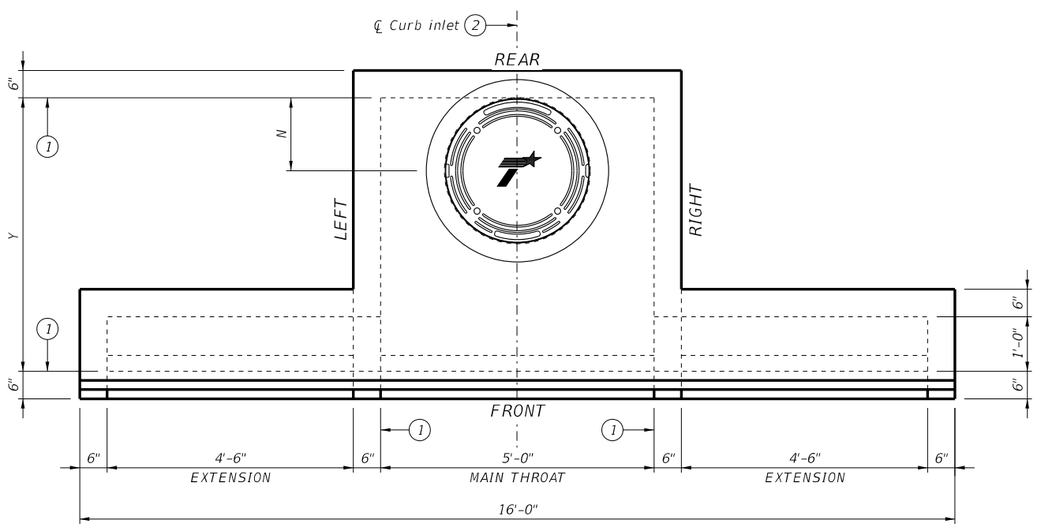

PLAN VIEW

(Showning left and right extensions)

1. Matches inside face of wall of precast base or riser below inlet.
2. Reference point is located where the ℄ of the main throat intersects the normal gutter line. See Curb and Gutter Transition Details for PCO Inlet (CGT-PCO) standard for more information.

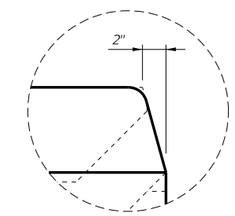

DETAIL "A"

HS20 LOADING

Texas Department of Transportation

Bridge Division Standard

PRECAST CURB INLET OUTSIDE ROADWAY

PCO

FILE: CD-PCO-23.dgn	DN: TxDOT	CK: TxDOT	DW: TxDOT	CK: TxDOT
©TxDOT February 2020	CONT	SECT	JOB	HIGHWAY
REVISIONS	0922	33	076	CS
06-2023: Added reference point.	DIST		COUNTY	SHEET NO.
	LRD		WEBB	118

DATE:
FILE:

DISCLAIMER:
The use of this standard is governed by the "Texas Engineering Practice Act". No warranty of any kind is made by TxDOT for any purpose whatsoever.
TxDOT assumes no responsibility for the conversion of this standard to other formats or for incorrect results or damages resulting from its use.

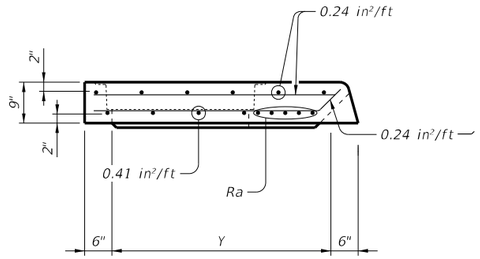

LID SECTION A-A

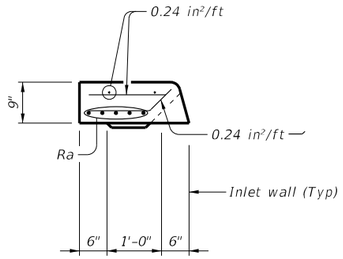

LID SECTION B-B

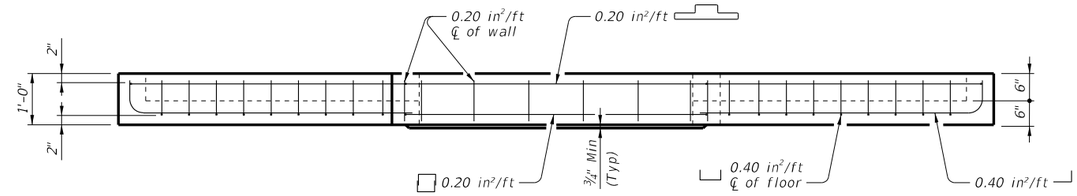

THROAT ELEVATION VIEW

(Showning left and right extensions)

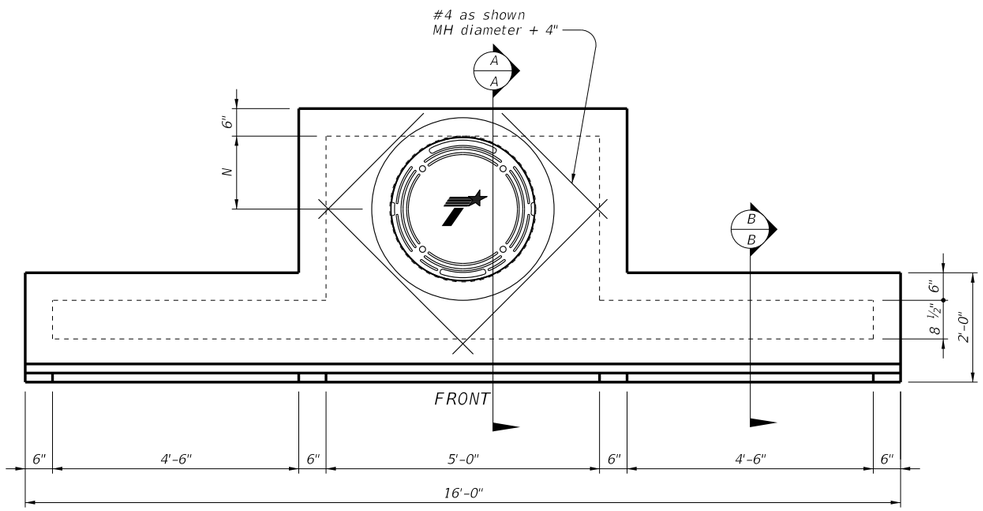

LID PLAN VIEW

(Showning left and right extensions)

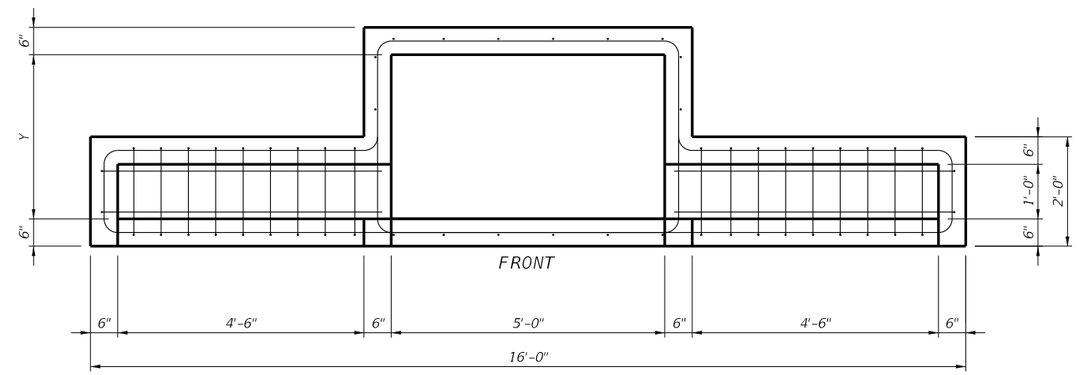

THROAT PLAN VIEW

(Showning left and right extensions)

Size (Y)	N	MH Dia*	Ra
3'	9"	18"	(4) #5 Additional
4'	16"	32"	(4) #5 Additional
5'	16"	32"	(4) #5 Additional
6'	16"	32"	(4) #5 Additional

*Nominal ring and cover size.

FABRICATION NOTES:

1. Provide Class "H" concrete in accordance with Item 421 and having a minimum compressive strength of 5,000 psi.
2. Provide Grade 60 reinforcing steel or equivalent area of WWR.
3. Extensions may be right, left, both or none. Provide extensions as specified elsewhere in the plans.
4. Design tongue and groove joints for full closure on both shoulders. Minimum spigot depth is ¾". Lid may employ a butt joint with dowels at the Contractor's option.
5. Provide lifting devices in conformance with Manufacturer's recommendations.
6. Provide cast iron solid cover, unless noted otherwise elsewhere in the plans.
7. Chamfer vertical edges of inlet lid ¾" as shown in Front View, sheet 1.

INSTALLATION NOTES:

1. Inlet throat and lid are not intended for direct traffic. Do not place in roadway.
2. Seal tongue and groove joints and butt joints with preformed or bulk mastic in conformance with Manufacturer's recommendations. Tongue and groove joints may be grouted no more than 1" between each section, or ½ the joint depth, whichever is greater.
3. Do not grout rubber gasket joints without Manufacturer's recommendation.

GENERAL NOTES:

1. Designed according to ASTM C913.
2. Open area of main throat = 360 sq in. Open area of one extension throat = 324 sq in.
3. Payment for inlet is per Item 465, "Junction Boxes, Manholes, and Inlets" by type, size, and extension placement. Extensions are subsidiary to inlet.

Cover dimensions are clear dimensions, unless noted otherwise.

HS20 LOADING

Texas Department of Transportation — Bridge Division Standard

PRECAST CURB INLET OUTSIDE ROADWAY

PCO

FILE: CD-PCO-23.dgn	DN: TxDOT	CK: TxDOT	DW: TxDOT	CK: TxDOT
©TxDOT February 2020	CONT	SECT	JOB	HIGHWAY
REVISIONS	0922	33	076	CS
06-2023: Added reference point.	DIST		COUNTY	SHEET NO.
	LRD		WEBB	119

DATE:
FILE:

DISCLAIMER:
The use of this standard is governed by the "Texas Engineering Practice Act". No warranty of any kind is made by TxDOT for any purpose whatsoever. TxDOT assumes no responsibility for the conversion of this standard to other formats or for incorrect results or damages resulting from its use.

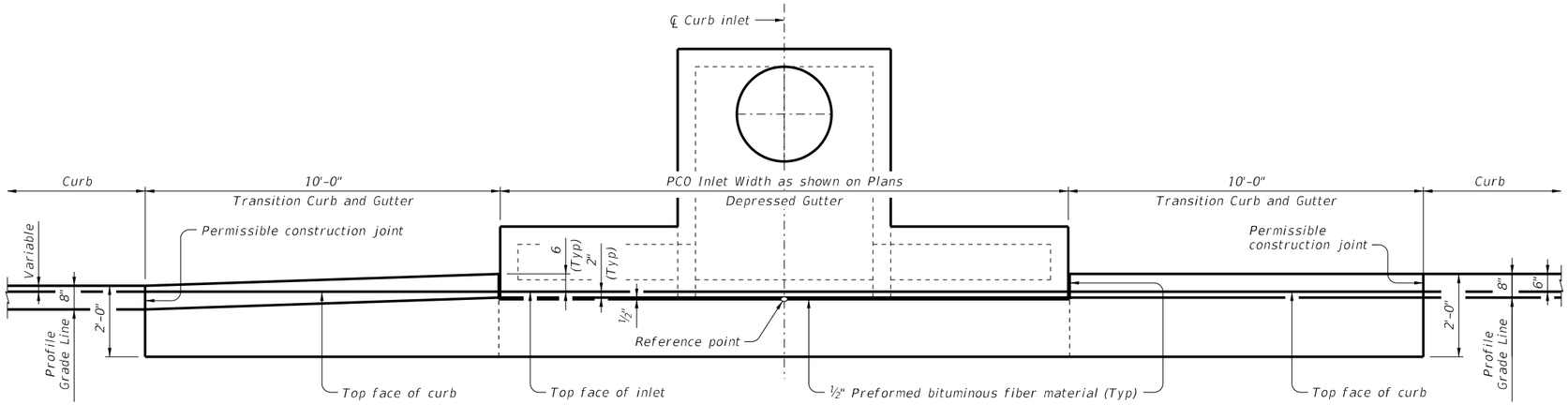

SHOWING TYPE I, IIa & III Curb and Gutter

SHOWING TYPE II & IV Curb and Gutter

PLAN

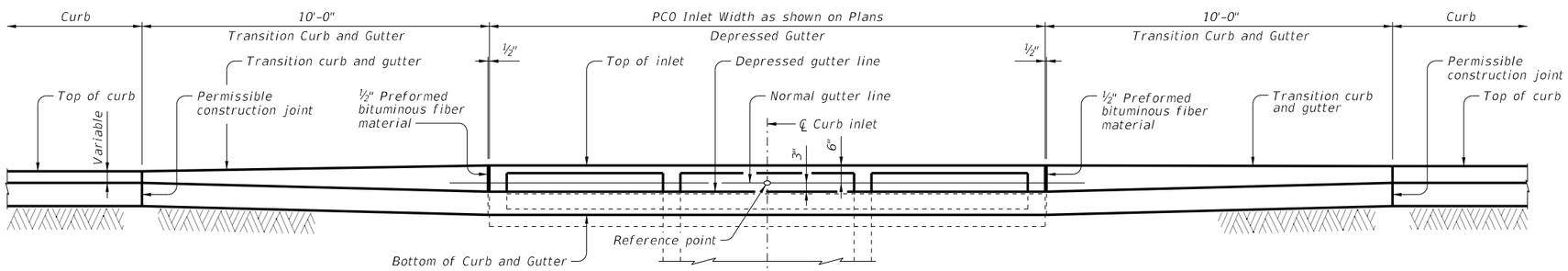

SHOWING TYPE I, IIa & III Curb and Gutter

SHOWING TYPE II & IV Curb and Gutter

ELEVATION

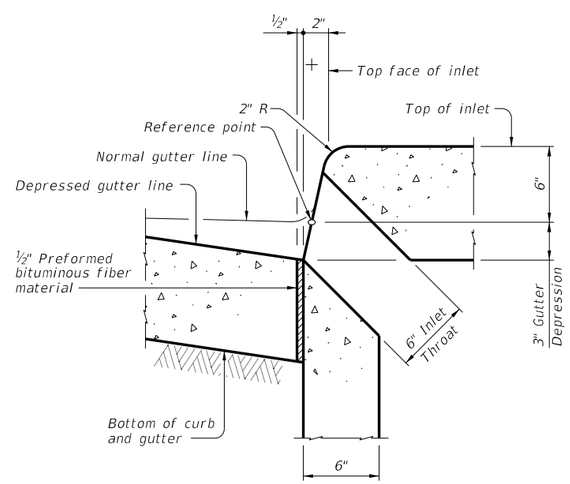

SECTION AT GUTTER AND INLET

(Reinforcing steel not shown for clarity.)

CONSTRUCTION NOTES:

Align top face of curb with PCO Inlet as shown.

MATERIAL NOTES:

Provide ½" preformed bituminous fiber material.

GENERAL NOTES:

Reference point is located where the ℄ of the main throat intersects the normal gutter line.

See Precast Curb Inlet Outside Roadway (PCO) standard for details and notes not shown.

See Concrete Curb and Curb and Gutter (CCCG-22) standard for details and notes not shown.

Curb and Gutter Transitions is paid for and in accordance with Item 529, "Concrete Curb, Gutter, and Combined Curb and Gutter."

Preformed bituminous fiber material is subsidiary to PCO Inlet.

Texas Department of Transportation

Bridge Division Standard

CURB AND GUTTER TRANSITION DETAILS FOR PCO INLET

CGT-PCO

FILE: CD-CGT-PCO-23.dgn	DN: TxDOT	CK: AES	DW: JTR	CK: AES
©TxDOT February 2020	CONT	SECT	JOB	HIGHWAY
REVISIONS	0922	33	076	CS
06-2023: Added reference point.	DIST		COUNTY	SHEET NO.
	LRD		WEBB	120

DATE:
FILE:

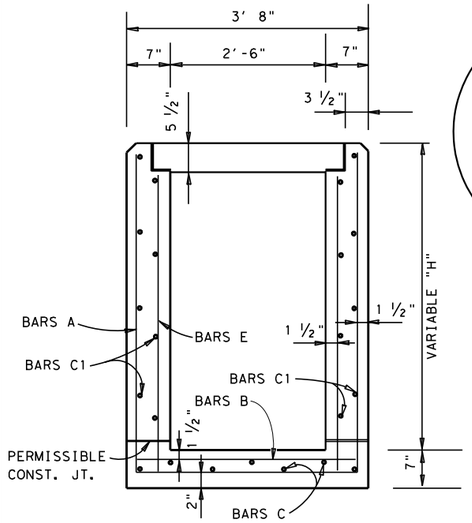

SECTION B-B

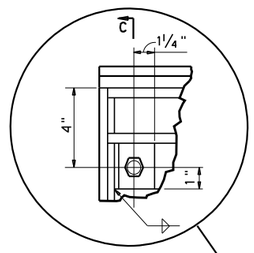

DETAIL #1

FOR 4-CORNERS

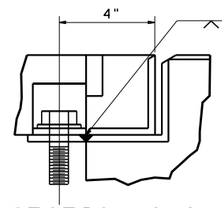

SECTION C-C

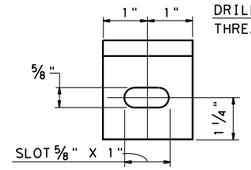

BRACKET

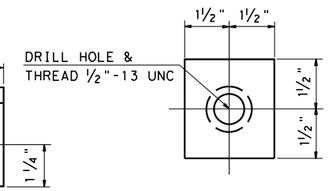

ASS'Y. PLATE

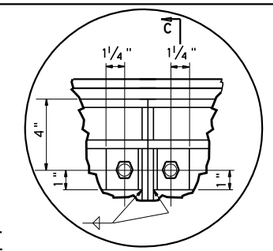

DETAIL #2

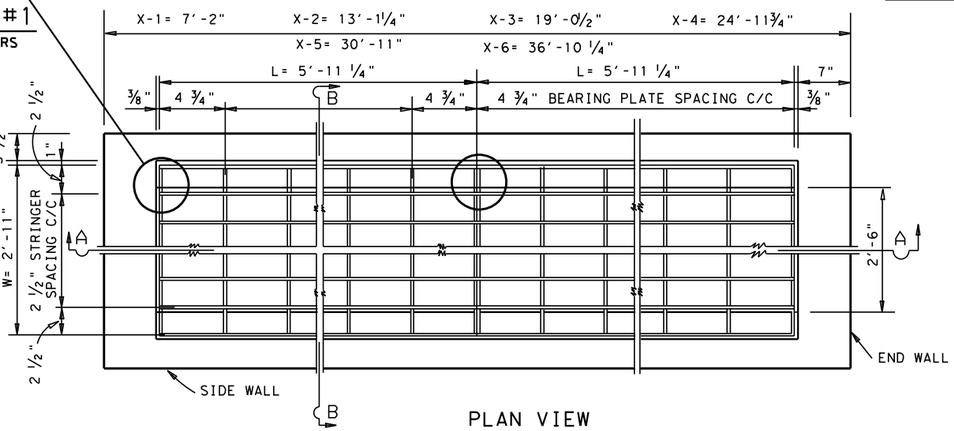

PLAN VIEW

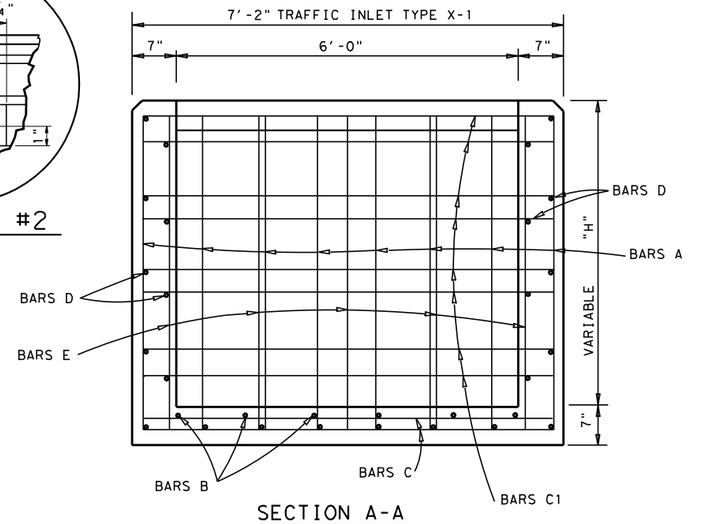

SECTION A-A

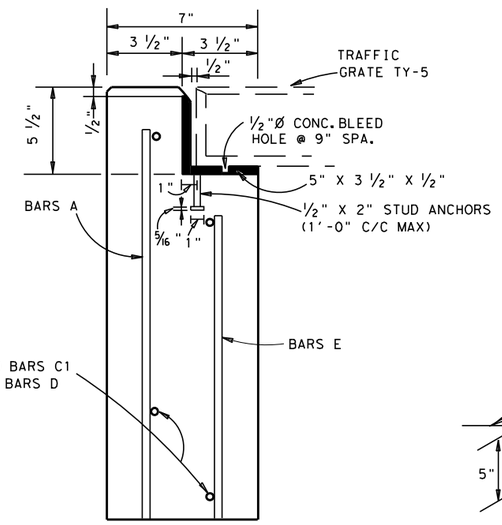

SIDE WALL

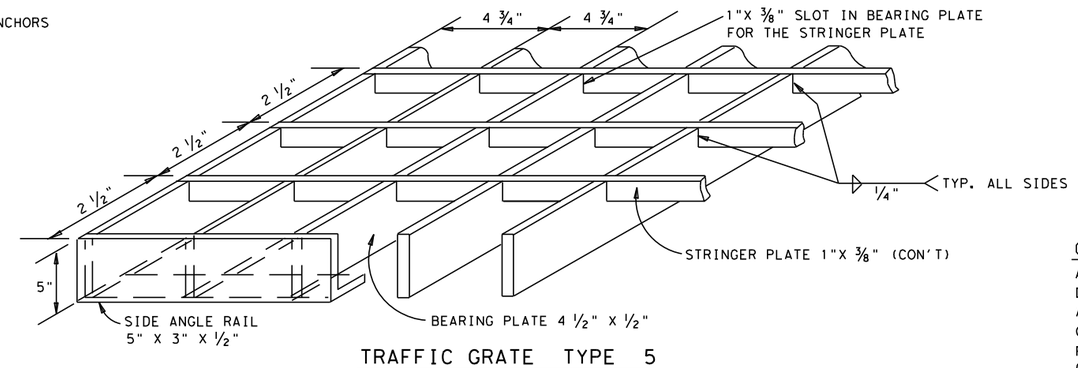

TRAFFIC GRATE TYPE 5

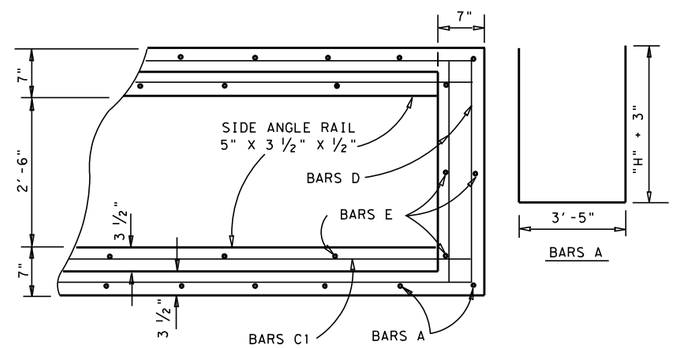

PLAN

GENERAL NOTES :

ALL CONCRETE SHALL BE CLASS "C". COARSE AGGREGATE GRADE "4" MAY BE USED.
DIMENSIONS RELATING TO REINFORCING STEEL ARE TO CENTER OF BARS.
ALL EXPOSED CORNERS SHALL BE CHAMFERED 3/4".,
QUANTITIES VARY WITH "H".
REINFORCING STEEL SHALL BE FIELD BENT OR CUT TO ALLOW FOR INSTALLATION OF PIPE(S).
PAYMENT FOR CONC., STEEL & GRATE SHALL BE INCLUDED IN UNIT COST OF ITEM 465 "MANHOLES & INLETS".

STRUCTURAL STEEL FOR ONE TRAFFIC GRATE TY 5

GRATE DIM. OUT TO OUT		SIDE-RAIL			BEARING PLATE			STRINGER PLATE			BRACKET			ASSEMBLY PLATE			ASSEMBLY BOLT			ASSEMBLY WASHER			TOTAL WEIGHT
		L5"X 3"X 1/2"			PL 4 1/2"X 1/2"			PL 1" X 3/8"			L3"X 3"X 1/2"			PL 3"X 1/2"			HEX BOLT 1/2"X 2"			CIRCULAR WASHER 9/16"Ø			
L	W	NO.	LGTH.	WT.	NO.	LGTH.	WT.	NO.	LGTH.	WT.	NO.	LGTH.	WT.	NO.	LGTH.	WT.	NO.	LGTH.	WT.	NO.	LGTH.	WT.	LBS.
5'-11 1/4"	2'-11"	2	5'-11 1/4"	152	16	2'-10"	347	13	5'-11 1/4"	99	4	2"	6.30	4	3"	5.10	4	2"	——	4	1 3/8"Ø OUTS	——	609 *

* QUANTITIES ARE FOR CONTRACTOR'S INFORMATION ONLY

REINFORCING STEEL AND ESTIMATED QUANTITIES (BASED ON "H"= VARIABLE)

INLET TYPE	BARS A (FLOOR & WALLS)					BARS B (FLOOR)					BARS C (FLOOR)					BARS C1 (SIDE WALLS)					BARS D (END WALLS)					BARS E (WALLS)					TOTAL * REINF STL LBS.	CL C CONC C.Y.	STRUCT STL LBS	TRAFFIC GRATE TY 5 EA.*
	NO.	SIZE	SPA.	LENGTH	WT.	NO.	SIZE	SPA.	LENGTH	WT.	NO.	SIZE	SPA.	LENGTH	WT.	NO.	SIZE	SPA.	LENGTH	WT.	NO.	SIZE	SPA.	LENGTH	WT.	NO.	SIZE	SPA.	LENGTH	WT.				
X-1	8	# 4	12"±	9'-11"	53	7	# 4	12"±	3'-5"	16	7	# 4	12"±	6'-10"	32	16	# 4	13"±	6'-10"	73	16	# 4	13"±	3'-5"	37	10	# 4	18"±	2'-9 1/2"	19	230	1.76	164	1
X-2	14	# 4	12"±	9'-11"	93	13	# 4	12"±	3'-5"	30	7	# 4	12"±	12'-9 1/4"	60	16	# 4	13"±	12'-9 1/4"	137	16	# 4	13"±	3'-5"	37	18	# 4	18"±	2'-9 1/2"	34	391	2.94	325	2
X-3	20	# 4	12"±	9'-11"	133	19	# 4	12"±	3'-5"	44	7	# 4	12"±	18'-8 1/2"	88	16	# 4	13"±	18'-8 1/2"	200	16	# 4	13"±	3'-5"	37	26	# 4	18"±	2'-9 1/2"	49	551	4.13	487	3
X-4	26	# 4	12"±	9'-11"	173	25	# 4	12"±	3'-5"	57	7	# 4	12"±	24'-7 3/4"	116	16	# 4	13"±	24'-7 3/4"	264	16	# 4	13"±	3'-5"	37	34	# 4	18"±	2'-9 1/2"	64	711	5.31	648	4
X-5	32	# 4	12"±	9'-11"	212	31	# 4	12"±	3'-5"	71	7	# 4	12"±	30'-7"	143	16	# 4	13"±	30'-7"	327	16	# 4	13"±	3'-5"	37	42	# 4	18"±	2'-9 1/2"	78	868	6.49	810	5
X-6	38	# 4	12"±	9'-11"	252	37	# 4	12"±	3'-5"	85	7	# 4	12"±	36'-6 1/4"	171	16	# 4	13"±	36'-6 1/4"	391	16	# 4	13"±	3'-5"	37	50	# 4	18"±	2'-9 1/2"	93	1029	7.67	971	6

TRAFFIC INLET TYPE X-1 THRU X-6
TRAFFIC GRATE TYPE 5

STATE OF TEXAS
KYLE GASS
94833
LICENSED
PROFESSIONAL ENGINEER

KYLE GASS, P.E.
7/31/2025

10/95

FED. RD. DIV. NO.	PROJECT NO.		SHEET NO.
6	DMO 2012 (628)		121
STATE	STATE DISTRICT	COUNTY	
TEXAS	SAT	WEBB	
CONT.	SECT.	JOB	HIGHWAY NO.
0922	33	076	CS

STRUCTURE DESIGN
/BRIDGE/STDS/DTRAF1T06.DGN

SUMMARY OF TRAFFIC SIGNAL QUANTITIES

TXDOT SPECS ITEM NO.	TXDOT SPECS DESC. CODE	DESCRIPTION	UNIT	TOTAL
416	7046	DRILL SHAFT (TRF SIG POLE) (48 IN)	LF	66
618	7030	CONDT (PVC) (SCH 40) (2")	LF	140
618	7040	CONDT (PVC) (SCH 40) (4")	LF	70
618	7055	CONDT (PVC) (SCH 80) (2") (BORE)	LF	450
618	7065	CONDT (PVC) (SCH 80) (4") (BORE)	LF	620
620	7009	ELEC CONDR (NO. 6) BARE	LF	1450
620	7010	ELEC CONDR (NO. 6) INSULATED	LF	120
621	7006	TRAY CABLE (4 CONDR) (12 AWR)	LF	1040
624	7008	GROUND BOX TY D (162922)W/APRON	EA	2
680	7002	INSTALL HWY TRF SIG (ISOLATED)	EA	1
680	*	** ROD 5/8 X 10' COPPE R GROUND (GROUND BOX)	EA	2
680	*	** R10-17T (30"X30") "LEFT TURN YIELD ON FLASHING YELLOW ARROW"	EA	4
680	*	** STREET NAME SIGN "FM 1472" (18"x66")	EA	2
680	*	** STREET NAME SIGN "<- La Flecha Ln / Las Cruces Dr ->" (18"x90")	EA	1
680	*	** STREET NAME SIGN "<- Las Cruces Dr / La Flecha Ln ->" (18"x90")	EA	1
680	*	** MAST ARM DAMPING PLATE	EA	3
680	*	** LED RDWY LUMINAIRE (.25KW EQ)	EA	4
680	7004	REMOVING TRAFFIC SIGNALS	EA	1
682	7001	VEH SIG SEC (12")LED(GRN)	EA	12
682	7002	VEH SIG SEC (12")LED(GRN ARW)	EA	4
682	7003	VEH SIG SEC (12")LED(YEL)	EA	12
682	7004	VEH SIG SEC (12")LED(YEL ARVV)	EA	8
682	7005	VEH SIG SEC (12")LED(RED)	EA	12
682	7006	VEH SIG SEC (12")LED(RED ARVV)	EA	4
682	7018	PED SIG SEC (LED)(COUNTDOWN)	EA	6
682	7042	BACKPLATE W/REF BRDR(3 SEC)(VENT)ALUM	EA	12
682	7043	BACKPLATE W/REF BRDR(4 SEC)(VENT)ALUM	EA	4
684	7009	TRF SIG CBL (TY A)(12 AWG)(4 CONDR)	LF	1465
684	7010	TRF SIG CBL (TYA)(12 AWG)(5 CONDR)	LF	600
684	7012	TRF SIG CBL (TYA)(12 AWG)(7 CONDR)	LF	1095
684	7014	TRF SIG CBL (TYA)(12 AWG)(9 CONDR)	LF	805
684	7028	TRF SIG CBL (TYA)(14 AWG)(2 CONDR)	LF	1310
686	7063	INS TRF SIG PL AM(S)1 ARM(60')LUM	EA	2
686	7067	INS TRF SIG PL AM(S)1 ARM(65')LUM	EA	1
687	7001	PED POLE ASSEMBLY	EA	3
656	*	** DRILL SHAFT(24")	LF	18
688	7001	PED DETECTOR PUSH BUTTON (APS)	EA	7
636	7001	ALUMINUM SIGNS (TY A)	SF	6.56
688	7003	PED DETECTOR CONTROLLER UNIT	EA	1
6009	9999	ITS SYSTEM INTEGRATION	LS	1
6005	*	** ITS COM CBL (ETHERNET)	LF	101
6008	*	** RVDS (PRESENCE DETECTION ONLY)	EA	2
6008	*	** RVDS (ADVANCE DETECTION ONLY)	EA	2
6014	*	** ITS RADIO (SNGL) (5GHZ) I (O)	EA	1
6018	*	** CCTV FIELD EQUIPMENT (DIGITAL)	EA	1

* SUBSIDIARY TO PERTINENT ITEM

NOT TO SCALE

STATE OF TEXAS
MIFTAH SHEMSU SEMANE
123456
LICENSED
PROFESSIONAL ENGINEER

MIFTAH SHEMSU SEMANE, P.E.
7/31/2025

LAS CRUCES REALIGNMENT

SUMMARY OF
TRAFFIC SIGNAL QUANTITIES

SHEET 1 OF 1

KCI TECHNOLOGIES, INC.
2806 W. BITTERS RD. - SUITE 218
SAN ANTONIO, TX 78248 - 210.641.9999
TEXAS REGISTERED ENGINEERING FIRM
TBPE FIRM No. F-10573
www.kci.com

Texas Department of Transportation

FED.RD. DIV.NO.	FEDERAL AID PROJECT NO.		SHEET NO.
6	DMO 2012 (628)		•
STATE	DIST.	COUNTY	
TEXAS	LRD	WEBB	
CONT.	SECT.	JOB	HIGHWAY NO.
0922	33	076	CS

PLOTTED ON: 7/31/2025 @ 4:14:40 PM DESIGN FILENAME: X:\datatxdot\Projects\359700_LasCruces_Flecha\WestLaredoCorridorII\TRAFFIC\LasCruces_TRAF SIG_01.dgn

EXISTING MAST ARM SIGN LEGEND

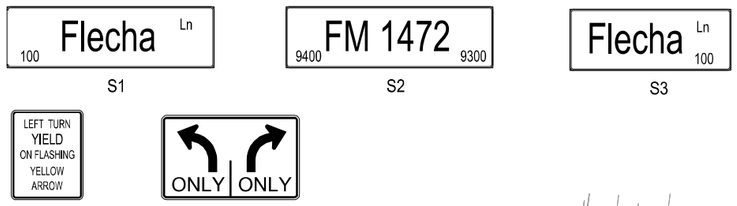

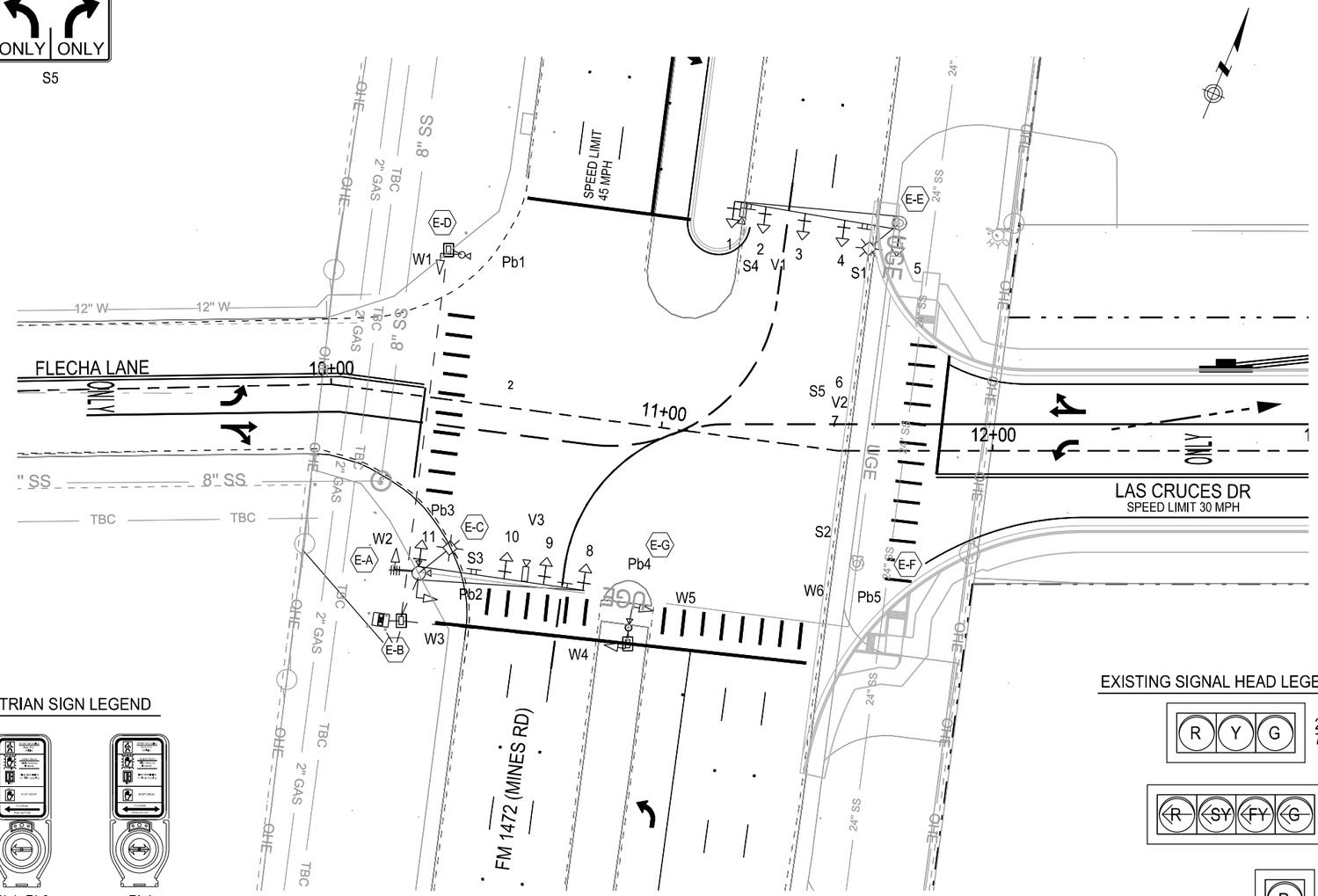

EXISTING PEDESTRIAN SIGN LEGEND

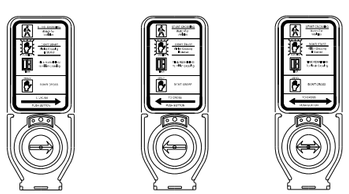

EXISTING SIGNAL HEAD LEGEND

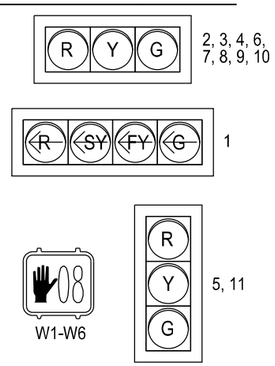

LEGEND

- EXIST MAST ARM SIGNAL POLE
- EXIST PEDESTRIAN SIGNAL POLE
- EXIST SIGNAL HEAD W/ BACKPLATE
- EXIST PEDESTRIAN SIGNAL HEAD
- EXIST PEDESTRIAN PUSH BUTTON
- EXIST CONTROLLER CABINET
- EXIST ELECTRICAL SERVICE
- EXIST VIDEO DETECTION (VIVDS)
- EXIST MAST ARM SIGN
- EXIST LUMINAIRE
- EXIST UNI-DIRECTIONAL ANTENNA
- EXIST GROUND BOX
- EXIST CONDUIT
- EXIST OVERHEAD ELECTRIC
- EXIST RIGHT OF WAY
- E-A EXIST CONTROLLER/ POLE IDENTIFIER

GRAPHIC SCALE
(IN FEET)
25 12.5 0 25 50 75
1" = 50'

STATE OF TEXAS
MIFTAH SHEMSU SEMANE
123456
LICENSED
PROFESSIONAL ENGINEER

MIFTAH SHEMSU SEMANE, P.E.
2/26/2025

LAS CRUCES REALIGNMENT

EXISTING SIGNAL LAYOUT
FM 1472 AT LAS CRUCES DR/FLECHA LN

SHEET 1 OF 1

KCI TECHNOLOGIES, INC.
2806 W. BITTERS RD. - SUITE 218
SAN ANTONIO, TX 78248 - 210.641.9999
TEXAS REGISTERED ENGINEERING FIRM
TBPE FIRM No. F-10573
www.kci.com

Texas Department of Transportation

FED.RD. DIV.NO.	FEDERAL AID PROJECT NO.		SHEET NO.
6	DMO 2012 (628)		123
STATE	DIST.	COUNTY	
TEXAS	LRD	WEBB	
CONT.	SECT.	JOB	HIGHWAY NO.
0922	33	076	CS

PLOTTED ON: 2/24/2025 @ 7:05:41 PM DESIGN FILENAME: X:\data\txdot\Projects\359700_LasCruces_FlechaWestLaredoCorridor\TRAFFIC\LasCruces_TRAF SIG_02.dgn

POLE & EQUIPMENT INFORMATION

- (E-A) EXISTING ELECTRICAL SERVICE TO REMAIN
- (E-B) EXISTING TRAFFIC SIGNAL CONTROLLER CABINET TO REMAIN
- (E-C) EXISTING SIGNAL MAST ARM POLE AND SIGNAL ATTACHMENTS TO BE REMOVED.
- (E-D) EXISTING 10' PED POLE WITH PROPOSED (1) LED COUNTDOWN PEDESTRIAN HEAD AND (1) AUDIBLE PEDESTRIAN PUSH BUTTON WITH R10-3e(L) SIGN.
- (E-E) EXISTING 30' LMA STEEL POLE WITH 50' MAST ARM, WITH PROPOSED (1) RADAR PRESENCE DETECTOR, (1) RADAR ADVANCE DETECTOR,(1) LUMINAIRE, (1) 4-SECTION HORIZONTAL (R-SY-FY-G), (2) 3-SECTION HORIZONTAL (R-Y-G), AND (1) 3-SECTION VERTICAL (R-Y-G).
- (E-F) EXISTING SIGNAL MAST ARM POLE AND SIGNAL ATTACHMENTS TO BE REMOVED.
- (E-G) EXISTING 10' PED POLE WITH PROPOSED (2) LED COUNTDOWN PEDESTRIAN HEAD AND (1) AUDIBLE PEDESTRIAN PUSH BUTTON WITH R10-3e(D) SIGN.
- (P-A) INSTALL 10' PED POLE ON A 5.7' DEEP 24-A FOUNDATION WITH (1) LED COUNTDOWN PEDESTRIAN HEAD AND (1) AUDIBLE PEDESTRIAN PUSH BUTTON WITH R10-3e(R) SIGN.
- (P-B) INSTALL 30' LMA STEEL POLE ON A 22' DEEP 48-A FOUNDATION WITH 60' MAST ARM, (1) RADAR PRESENCE DETECTOR, (1) LUMINAIRE, (1) 4-SECTION HORIZONTAL (R-SY-FY-G), AND (2) 3-SECTION HORIZONTAL (R-Y-G)
- (P-C) INSTALL 10' PED POLE ON A 5.7' DEEP 24-A FOUNDATION WITH (1) LED COUNTDOWN PEDESTRIAN HEAD AND (1) AUDIBLE PEDESTRIAN PUSH BUTTON WITH R10-3e(R) SIGN.
- (P-D) INSTALL 10' PED POLE ON A 5.7' DEEP 24-A FOUNDATION WITH (1) LED COUNTDOWN PEDESTRIAN HEAD AND (1) AUDIBLE PEDESTRIAN PUSH BUTTON WITH R10-3e(L) SIGN.
- (P-E) INSTALL 30' LMA STEEL POLE ON A 22' DEEP 48-A FOUNDATION WITH 65' MAST ARM, (1) RADAR PRESENCE DETECTOR, (1) LUMINAIRE, (1) 4-SECTION HORIZONTAL (R-SY-FY-G), (2) 3-SECTION HORIZONTAL (R-Y-G), (1) LED COUNTDOWN PEDESTRIAN HEAD AND (1) AUDIBLE PEDESTRIAN PUSH BUTTON WITH R10-3e(R) SIGN.
- (P-F) INSTALL 30' LMA STEEL POLE ON A 22' DEEP 48-A FOUNDATION WITH 60' MAST ARM, (1) RADAR PRESENCE DETECTOR, (1) CCTV CAMERA, (1) ITS 5 GHZ RADIO, (1) LUMINAIRE, (1) 4-SECTION HORIZONTAL (R-SY-FY-G), (2) 3-SECTION HORIZONTAL (R-Y-G),(1) 3-SECTION VERTICAL (R-Y-G), (1) LED COUNTDOWN PEDESTRIAN HEAD AND (1) AUDIBLE PEDESTRIAN PUSH BUTTON WITH R10-3e(L) SIGN.

PROPOSED PEDESTRIAN SIGN LEGEND

Pb2, Pb5, Pb7

9"X15" R10-3e(L) COUNTDOWN SIGN

Pb4

9"X15" R10-3e(D) COUNTDOWN SIGN

Pb1, Pb3, Pb6

9"X15" R10-3e(R) COUNTDOWN SIGN

PROPOSED SIGNAL HEAD LEGEND

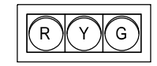

PROPOSED 3-SECTION 12" LENS HORIZONTAL SIGNAL HEADS W/2" YELLOW REFLECTIVE BORDER SIGNAL HEADS: 2, 3, 4, 7, 8, 10, 11, 12, 15, 16

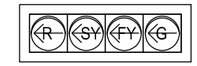

PROPOSED 4-SECTION 12" LENS HORIZONTAL SIGNAL HEADS W/2" YELLOW REFLECTIVE BORDER SIGNAL HEADS: 1, 6, 9, 14

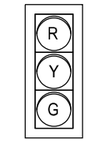

PROPOSED 3-SECTION 12" LENS VERTICAL SIGNAL HEADS W/2" YELLOW REFLECTIVE BORDER SIGNAL HEADS: 5, 13

LED COUNTDOWN PEDESTRIAN SIGNAL W1-W8

EXISTING EQUIPMENT

- EXIST MAST ARM SIGNAL POLE
- EXIST PEDESTRIAN SIGNAL POLE
- EXIST CONTROLLER CABINET
- EXIST ELECTRICAL SERVICE
- EXIST LUMINAIRE
- EXIST GROUND BOX
- EXIST CONDUIT
- EXIST OVERHEAD ELECTRIC
- EXIST RIGHT OF WAY
- (E-A) EXIST CONTROLLER/ POLE IDENTIFIER

PROPOSED EQUIPMENT

- PROP MAST ARM SIGNAL POLE
- PROP PEDESTRIAN SIGNAL POLE
- PROP CONTROLLER CABINET
- PROP SIGNAL HEAD W/ BACKPLATE
- PROP CCTV CAMERA
- R1 PROP RADAR PRESENCE DETECTOR
- ADV-1 PROP RADAR ADVANCE DETECTOR
- PROP PEDESTRIAN SIGNAL HEAD
- PROP PEDESTRIAN PUSH BUTTON
- PROP MAST ARM SIGN
- PROP LUMINAIRE
- PROP TY D GROUND BOX
- PROP CONDUIT (TRENCH)
- PROP CONDUIT (BORE)
- (A) PROP CONTROLLER/POLE IDENTIFIER
- (1) PROP CABLE RUN IDENTIFIER
- 1 PROP SIGNAL HEAD IDENTIFIER
- S1 PROP SIGN IDENTIFIER
- PROP RIGHT OF WAY
- DIRECTION OF TRAFFIC FLOW

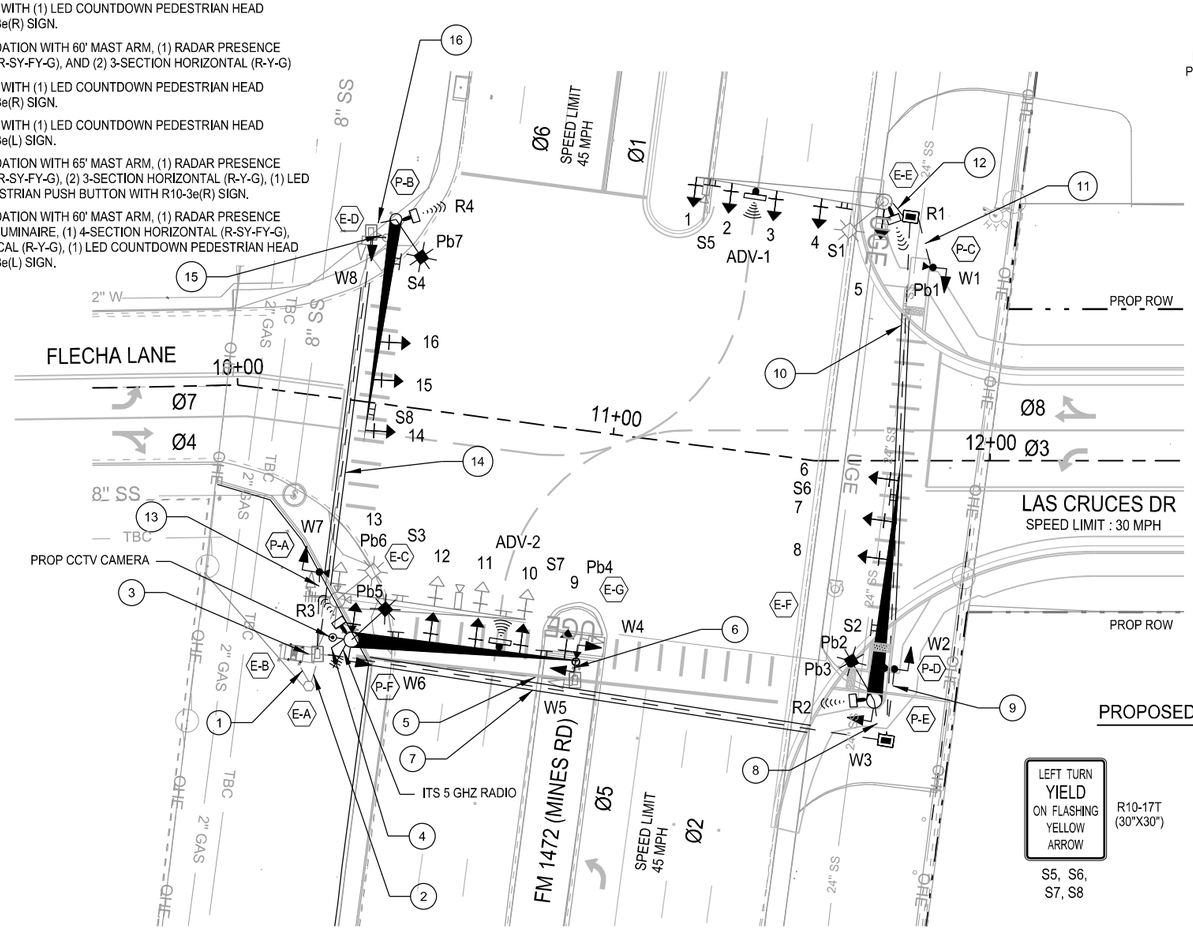

PROPOSED MAST ARM SIGN LEGEND

R10-17T (30"X30")

S5, S6, S7, S8

S2, S4

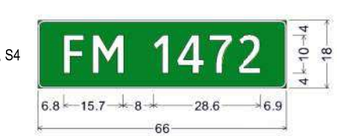

1.5" Radius, 0.5" Border, White on Green; "FM 1472", ClearviewHwy-3-W;

S1

1.5" Radius, 0.5" Border, White on Green; Standard Arrow Custom 10.0" X 6.1" 180°; "La Flecha", ClearviewHwy-2-W; "Ln", ClearviewHwy-2-W; "Las Cruces", ClearviewHwy-2-W; "Dr", ClearviewHwy-2-W; Standard Arrow Custom 10.0" X 6.1" 0°;

S3

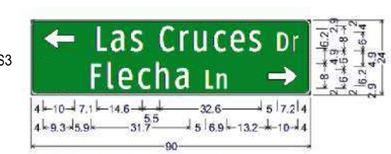

1.5" Radius, 0.5" Border, White on Green; Standard Arrow Custom 10.0" X 6.1" 180°; "Las Cruces", ClearviewHwy-2-W; "Dr", ClearviewHwy-2-W; "La Flecha", ClearviewHwy-2-W; "Ln", ClearviewHwy-2-W; Standard Arrow Custom 10.0" X 6.1" 0°;

NOTES:

1. ALL MATERIAL SHALL BE AS PER TXDOT APPROVED MATERIAL LIST.
2. ALL WORK SHALL BE AS PER TXDOT STANDARDS AND SPECIFICATIONS.
3. THE LOCATION FOR THE CONTROLLER CABINET, TRAFFIC SIGNAL POLES, AND CONDUIT RUNS ARE APPROXIMATE. DETERMINE THE EXACT LOCATIONS IN COORDINATION WITH THE ENGINEER IN THE FIELD.
4. LOCATION OF UTILITIES SHOWN ARE APPROXIMATE. IT IS THE CONTRACTOR'S RESPONSABILITY TO LOCATE ALL UTILITIES (PUBLIC AND PRIVATE) PRIOR TO COMMENCING WORK. THE CONTRACTOR IS FULLY RESPONSIBLE FOR ANY DAMAGE CAUSED BY HIS FAILURE TO LOCATE AND PRESERVE THESE UTILITIES, WHETHER UNDERGROUND, ABOVE-GROUND OR OVERHEAD.
5. CONTRACTOR SHALL POTHHOLE SIGNAL POLE FOUNDATION LOCATIONS NEAR UNDERGROUND UTILITIES PRIOR TO INSTALLING POLE FOUNDATIONS.
6. CONTRACTOR SHALL CONFIRM THAT SIGNAL POLES AND PEDESTAL POLES DO NOT HAVE ANY UTILITY UNDERGROUND/OVERHEAD CONFLICTS PRIOR TO INSTALLING PROPOSED ADA RAMPS, AND VICEVERSA.
7. LOCATION OF SIGNAL POLES, CABINET, AND ELECTRICAL SERVICE SHALL BE VERIFIED AND APPROVED BY TXDOT PRIOR TO CONSTRUCTION.
8. CONTRACTOR SHALL CONNECT FIELD WIRING TO CONTROLLER.
9. SIGNAL HEADS SHALL HAVE A MINIMUM OF 18.5 FEET CLEARANCE ABOVE ROADWAY SURFACE.
10. CONTRACTOR SHALL RESTORE THE CONSTRUCTION AREA TO ORIGINAL CONDITION PRIOR TO FINAL INSPECTION.

GRAPHIC SCALE (IN FEET)

20 10 0 20 40 60

1" = 40'

STATE OF TEXAS
MIFTAH SHEMSU SEMANE
123456
LICENSED
PROFESSIONAL ENGINEER

MIFTAH SHEMSU SEMANE, P.E.
2/26/2025

LAS CRUCES REALIGNMENT

PROPOSED SIGNAL LAYOUT
FM 1472 AT LAS CRUCES DR/FLECHA LN

SHEET 1 OF 1

KCI TECHNOLOGIES, INC.
2806 W. BITTERS RD. - SUITE 218
SAN ANTONIO, TX 78248 - 210.641.9999
TEXAS REGISTERED ENGINEERING FIRM
TBPE FIRM No. F-10573
www.kci.com

Texas Department of Transportation

FED.RD. DIV.NO.	FEDERAL AID PROJECT NO.		SHEET NO.
6	DMO 2012 (628)		124
STATE	DIST.	COUNTY	
TEXAS	LRD	WEBB	
CONT.	SECT.	JOB	HIGHWAY NO.
0922	33	076	CS

PLOTTED ON: 2/24/2025 @ 7:05:41 PM DESIGN FILENAME: X:\data\txdot\Projects\359700_LasCruces_Flecha\WestLaredoCorridor\TRAFFIC\LasCruces_TRAF SIG_03.dgn

PROPOSED CONDUIT AND CONDUCTOR SCHEDULE

B = BORED T = TRENCHED E = EXISTING	CONDUIT / SPAN RUN NUMBER		1	2	3	4		5	6	7		8		9	10		11	12		13	14		15	16	
	EXISTING CONDUIT		1	1	2			1	1														1		
	NUMBER OF 2" CONDUIT					1						1		1			1	1		1				1	
	NUMBER OF 2" CONDUIT (BORE)									1					1						1				
	NUMBER OF 4" CONDUIT						1						1						1						1
	NUMBER OF 4" CONDUIT (BORE)										2					1						1			
	CONDUIT/ SPAN LENGTH (FT)		15	15	15	15	15	70	10	160	160	15	15	25	145	145	20	15	15	25	120	120	10	15	15
	RUN TYPE		E	E	E	T	T	E	E	B	B	T	T	T	B	B	T	T	T	T	B	B	E	T	T
CABLE	CIRCUIT		NUMBER OF CABLES/WIRES																						
#6-XHHW	120 POWER HOT		1																						
	120 POWER COMMON		1																						
#6-BARE	BARE BOND GROUND		1	1	2	1	1	1	1	1	2	1	1	1	1	1	1	1	1	1	1	1	1	1	1
9-CONDUCTOR #12 STRANDED TY A	VEHICLE SIGNALS	POLE P-B- PHASE ø8			1																	1			1
		POLE E-E - PHASE ø2			1						1					1			1						
		POLE P-E- PHASE ø4			1						1		1												
		POLE P-F- PHASE ø6			1		1																		
7-CONDUCTOR #12 STRANDED TY A	VEHICLE SIGNALS	POLE P-D- PHASE ø3			1																	1			1
		POLE E-E - PHASE ø5			1						1					1			1						
		POLE P-E- PHASE ø7			1						1		1												
		POLE P-F- PHASE ø1			1		1																		
4-CONDUCTOR #12 STRANDED TY A	PED SIGNALS	POLE P-C - PED PHASE ø2			1						1					1	1								
		POLE P-D - PED PHASE ø2			1						1			1											
		POLE P-E - PED PHASE ø4			1						1		1												
		POLE E-G - PED PHASE ø4			2			2	2																
		POLE P-F - PED PHASE ø4			1		1																		
		POLE P-A - PED PHASE ø6			1															1					
		POLE E-D - PED PHASE ø6			1																	1	1		1
2-CONDUCTOR #14 STRANDED TY A	APS PUSH BUTTON	POLE P-C - PED PHASE ø2			1						1					1	1								
		POLE P-D - PED PHASE ø2			1						1			1											
		POLE P-E - PED PHASE ø4			1						1		1												
		POLE E-G - PED PHASE ø4			1			1	1																
		POLE P-F - PED PHASE ø4			1		1																		
		POLE P-A - PED PHASE ø6			1															1					
		POLE E-D - PED PHASE ø6			1																	1	1		1
POWER AND DATA CABLE	PRESENCE RADAR	POLE E-E - RPDD #1			1						1					1			1						
		POLE P-E - RPDD #2			1						1		1												
		POLE P-F - RPDD #3			1		1																		
		POLE P-B - RPDD #4			1																	1			1
POWER AND DATA CABLE	ADVANCE RADAR	POLE E-E - RADD #1			1						1					1			1						
		POLE P-F RADD #2			1		1																		
4 COND #12 TRAY CABLE	LUMINAIRE	POLE E-E		1						1					1			1							
		POLE P-E		1						1		1													
		POLE P-F		1		1																			
		POLE P-B		1																	1			1	
ITS COMM CABLE	CCTV CAMERA	POLE P-F			1		1																		
ITS COMM CABLE	ITS 5 GHZ RADIO	POLE P-F			1		1																		

WIRE INSIDE CABINET, METER, AND SIGNAL POLES AND ARMS (FT)

CABINET/POLE		E-A	E-B	E-D	E-E	E-G	P-A	P-B	P-C	P-D	P-E	P-F
WIRE												
12 AWG	#6-XHHW	50	30									
	5/C TRAFFIC SIGNAL				156			113			123	169
	7/C TRAFFIC SIGNAL				75			85			90	85
	9/C TRAFFIC SIGNAL		60									
	4/C PED SIGNAL		120	15		30	15		15	15	15	15
	4/C LUMINAIRE TRAY CABLE	100			45			45			45	45
14 AWG	2/C APS PUSH BUTTON		120	10		10	10		10	10	10	10
POWER AND DATA CABLE	RPDD		60		30			30			30	30
	RADD		30		60							65
ITS COM CBL	CCTV CAMERA		15									35
ITS COM CBL	ITS 5 GHZ RADIO											35

TRAFFIC SIGNAL ITEM LOCATIONS

ITEM	LAS CRUCES DRIVE	OFFSET
P-A	10+27.9	46.1' RT
P-B	10+35.8	48.8' LT
P-C	11+84.9	51.0' LT
P-D	11+74.7	55.0' RT
P-E	11+69.4	63.4' RT
P-F	10+38.5	62.8' RT

PHASING DIAGRAM

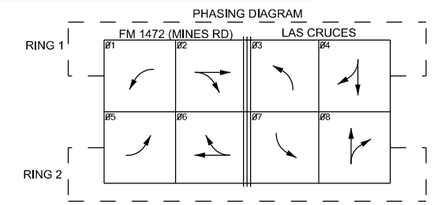

STATE OF TEXAS
MIFTAH SHEMSU SEMANE
123456
LICENSED
PROFESSIONAL ENGINEER

MIFTAH SHEMSU SEMANE, P.E.
2/26/2025

LAS CRUCES REALIGNMENT

PROPOSED SIGNAL DETAILS
FM 1472 AT LAS CRUCES DR/FLECHA LN

SHEET 2 OF 3

KCI TECHNOLOGIES, INC.
2806 W. BITTERS RD. - SUITE 218
SAN ANTONIO, TX 78248 - 210.641.9999
TEXAS REGISTERED ENGINEERING FIRM
TBPE FIRM No. F-10573
www.kci.com

Texas Department of Transportation

FED.RD. DIV.NO.	FEDERAL AID PROJECT NO.		SHEET NO.
6	DMO 2012 (628)		125
STATE	DIST.	COUNTY	
TEXAS	LRD	WEBB	
CONT.	SECT.	JOB	HIGHWAY NO.
0922	33	076	CS

PLOTTED ON: 2/24/2025 @ 7:05:42 PM DESIGN FILENAME: X:\data\txdot\Projects\359700_LasCruces_Flecha\WestLaredoCorridor\TRAFFIC\LasCruces_TRAF SIG_04.dgn

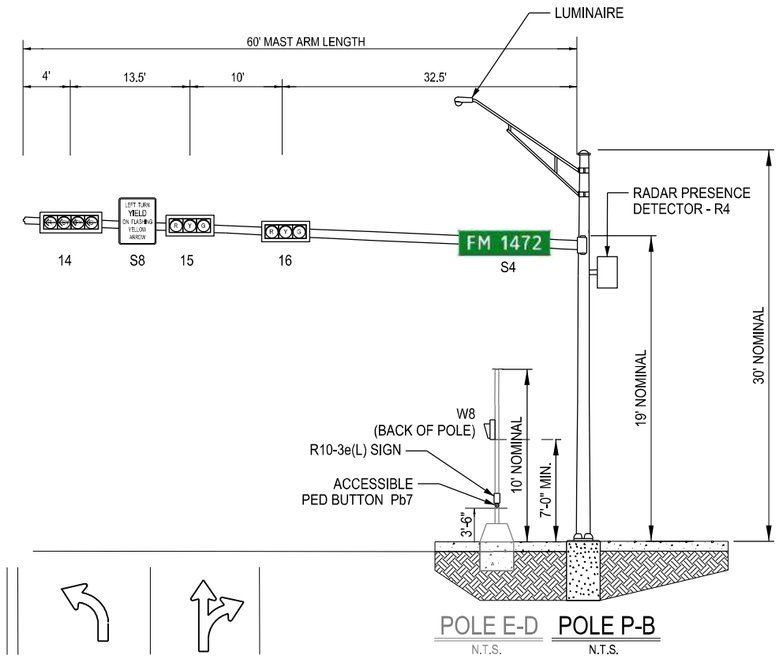

WESTBOUND LAS CRUCES DRIVE

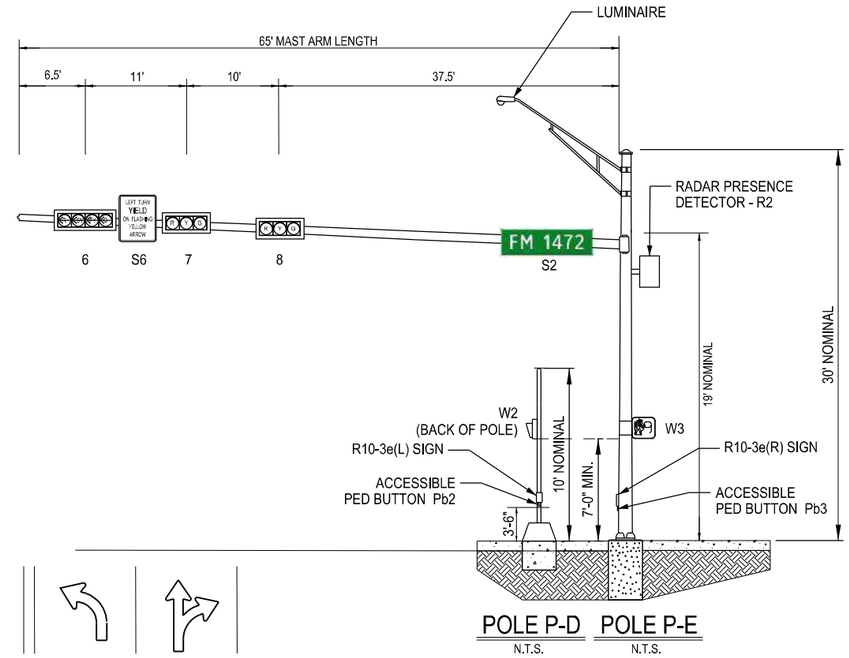

EASTBOUND FLECHA LANE

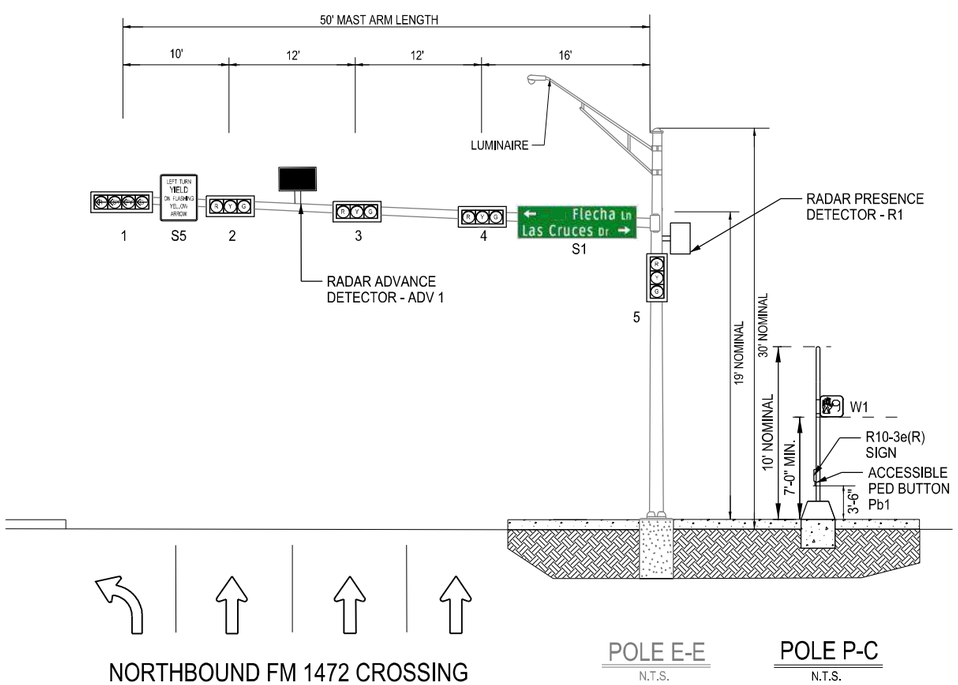

NORTHBOUND FM 1472 CROSSING

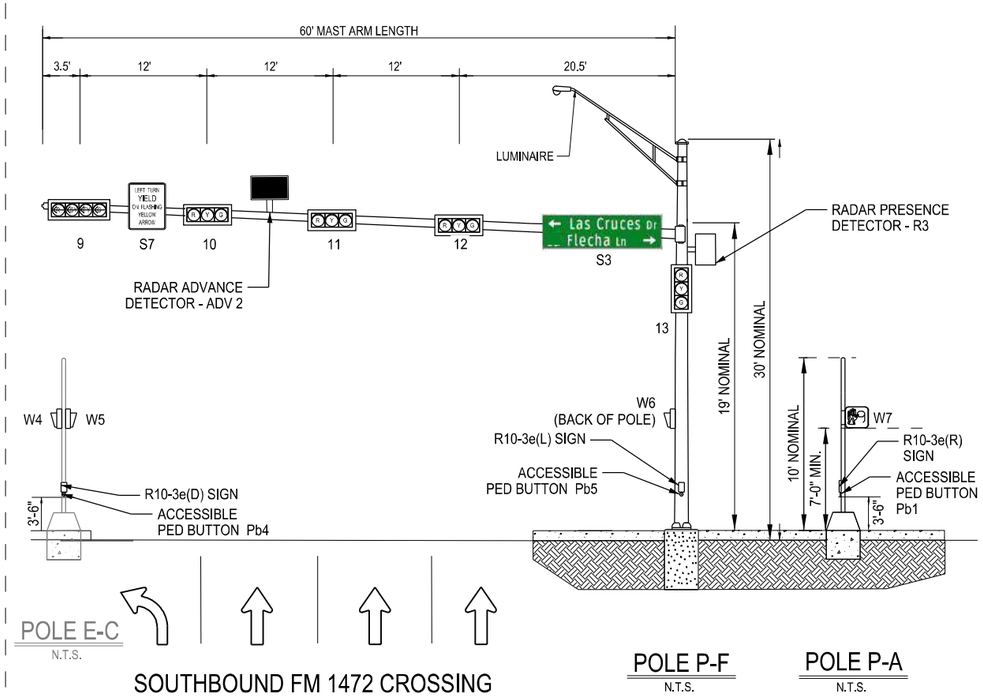

SOUTHBOUND FM 1472 CROSSING

NOT TO SCALE

STATE OF TEXAS
MIFTAH SHEMSU SEMANE
123456
LICENSED
PROFESSIONAL ENGINEER

MIFTAH SHEMSU SEMANE, P.E.
2/26/2025

LAS CRUCES REALIGNMENT

PROPOSED
TRAFFIC SIGNAL ELEVATIONS
FM 1472 AT LAS CRUCES DR/FLECHA LN

SHEET 3 OF 3

KCI TECHNOLOGIES, INC.
2806 W. BITTERS RD. - SUITE 218
SAN ANTONIO, TX 78248 - 210.641.9999
TEXAS REGISTERED ENGINEERING FIRM
TBPE FIRM No. F-10573
www.kci.com

Texas Department of Transportation

FED.RD. DIV.NO.	FEDERAL AID PROJECT NO.		SHEET NO.
6	DMO 2012 (628)		126
STATE	DIST.	COUNTY	
TEXAS	LRD	WEBB	
CONT.	SECT.	JOB	HIGHWAY NO.
0922	33	076	CS

PLOTTED ON: 2/24/2025 @ 7:05:44 PM DESIGN FILENAME: X:\data\txdot\Projects\359700_LasCruces_FlechaWestLaredoCorridorII\TRAFFIC\LasCruces_TRAF SIG_05.dgn

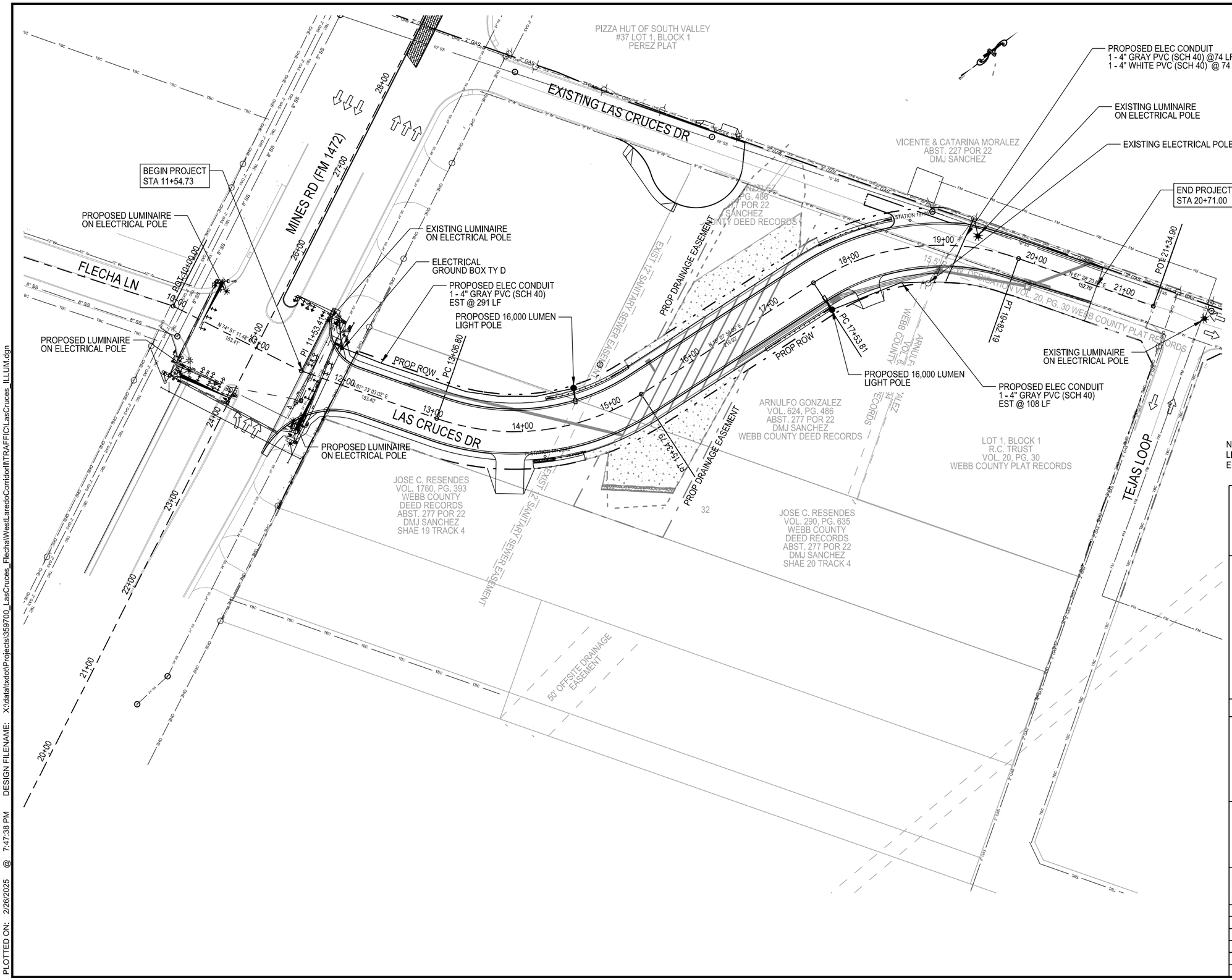

NOTE:
LIGHT POLES, CONDUCTOR, GROUND BOXES, ELECTRICAL SERVICE TO BE INSTALLED BY OTHERS.

GRAPHIC SCALE
(IN FEET)
50 25 0 50 100 150
1" = 100'

STATE OF TEXAS
EDWARD L. OCHOA
92596
LICENSED
PROFESSIONAL ENGINEER

EDWARD L. OCHOA, P.E.
2/26/2025

LAS CRUCES REALIGNMENT

ILLUMINATION LAYOUT

SHEET 1 OF 1

KCI TECHNOLOGIES, INC.
2806 W. BITTERS RD. - SUITE 218
SAN ANTONIO, TX 78248 - 210.641.9999
TEXAS REGISTERED ENGINEERING FIRM
TBPE FIRM No. F-10573
www.kci.com

Texas Department of Transportation

FED.RD. DIV.NO.	FEDERAL AID PROJECT NO.		SHEET NO.
6	DMO 2012 (628)		127
STATE	DIST.	COUNTY	
TEXAS	LRD	WEBB	
CONT.	SECT.	JOB	HIGHWAY NO.
0922	33	076	CS

PLOTTED ON: 2/26/2025 @ 7:47:38 PM DESIGN FILENAME: X:\data\txdot\Projects\359700_LasCruces_Flecha\WestLaredoCorridor\TRAFFIC\LasCruces_ILLUM.dgn

DISCLAIMER: The use of this standard is governed by the "Texas Engineering Practice Act". No warranty of any kind is made by TxDOT for any purpose whatsoever. TxDOT assumes no responsibility for the conversion of this standard to other formats or for incorrect results or damages resulting from its use.

FOUNDATION DESIGN TABLE

FDN TYPE	DRILLED SHAFT DIA	REINFORCING STEEL: VERT BARS	REINFORCING STEEL: SPIRAL & PITCH	EMBEDDED DRILLED SHAFT LENGTH-ft ④, ⑤, ⑥: TEXAS CONE PENETROMETER N blows/ft: 10	15	40	ANCHOR BOLT DESIGN ①: ANCHOR BOLT DIA	Fy (ksi)	BOLT CIR DIA	ANCHOR TYPE	FOUNDATION DESIGN LOAD ②: MOMENT K-ft	SHEAR Kips	TYPICAL APPLICATION
24-A	24"	4- #5	#2 at 12"	5.7	5.3	4.5	¾"	36	12 ¾"	2	10	1	Pedestal pole, pedestal mounted controller.
30-A	30"	8- #9	#3 at 6"	11.3	10.3	8.0	1 ½"	55	17"	2	87	3	Mast arm assembly. (see Selection Table)
36-A	36"	10- #9	#3 at 6"	13.2	12.0	9.4	1 ¾"	55	19"	2	131	5	Mast arm assembly. (see Selection Table) 30' strain pole with or without luminaire.
36-B	36"	12- #9	#3 at 6"	15.2	13.6	10.4	2"	55	21"	2	190	7	Mast arm assembly. (see Selection Table) Strain pole taller than 30' & strain pole with mast arm
42-A	42"	14- #9	#3 at 6"	17.4	15.6	11.9	2 ¼"	55	23"	2	271	9	Mast arm assembly. (see Selection Table)

NOTES:

① Anchor bolt design develops the foundation capacity given under Foundation Design Loads.

② Foundation Design Loads are the allowable moments and shears at the base of the structure.

③ Foundations may be listed separately or grouped according to similarity of location and type. Quantities are for the Contractor's information only.

④ Field Penetrometer readings at a depth of approximately 3 to 5 feet may be used to adjust shaft lengths.

⑤ If rock is encountered, the Drilled Shaft shall extend a minimum of two diameters into solid rock.

⑥ Decimal lengths in Design Table are to allow interpolation for other penetrometer values. Round to nearest foot for entry into Summary Table.

FOUNDATION SUMMARY TABLE ③

LOCATION IDENTIFICATION	AVG. N BLOW /ft.	FDN TYPE	NO. EA	DRILLED SHAFT LENGTH ⑥ (FEET): 24-A	30-A	36-A	36-B	42-A
POLE "P-A"	10	24-A	1	*6				
POLE "P-C"	10	24-A	1	*6				
POLE "P-D"	10	24-A	1	*6				
TOTAL DRILLED SHAFT LENGTHS				*18				

*SUBSIDIARY TO ITEM 687.

FOUNDATION SELECTION TABLE FOR STANDARD MAST ARM PLUS ILSN SUPPORT ASSEMBLIES (ft)

		FDN 30-A	FDN 36-A	FDN 36-B	FDN 42-A
80 MPH DESIGN WIND SPEED	MAX SINGLE ARM LENGTH	32'	48'		
	MAXIMUM DOUBLE ARM LENGTH COMBINATIONS	24' X 24'			
		28' X 28'			
		32' X 28'	32' X 32'		
			36' X 36'		
			40' X 36'		
			44' X 28'	44' X 36'	
100 MPH DESIGN WIND SPEED	MAX SINGLE ARM LENGTH		36'	44'	
	MAXIMUM DOUBLE ARM LENGTH COMBINATIONS		24' X 24'		
			28' X 28'		
			32' X 24'	32' X 32'	
				36' X 36'	
				40' x24'	40' X 36'
					44' x 36'

EXAMPLE:
1. For 80mph design wind speed, foundation 30-A can support up to a 32' arm with another arm up to 28'
2. For 100mph design wind speed, foundation 36-A can support a single 36' mast arm.

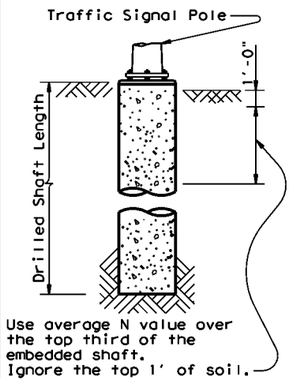

ANCHOR BOLT & TEMPLATE SIZES

BOLT DIA IN.	⑦ BOLT LENGTH	TOP THREAD	BOTTOM THREAD	BOLT CIRCLE	R2	R1
¾"	1'-6"	3"	—	12 ¾"	7 ⅛"	5 ⅝"
1 ½"	3'-4"	5"	4"	17"	10"	7"
1 ¾"	3'-10"	7"	8 ½"	19"	11 ¼"	7 ¾"
2"	4'-3"	8"	5"	21"	12 ½"	8 ½"
2 ¼"	4'-9"	9"	5 ½"	23"	13 ¾"	9 ¼"

⑦ Min dimensions given, longer bolts are acceptable.

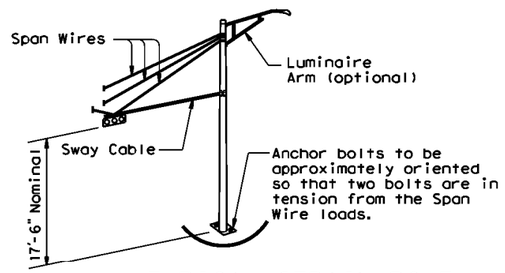

TYPICAL STRAIN POLE ASSEMBLY

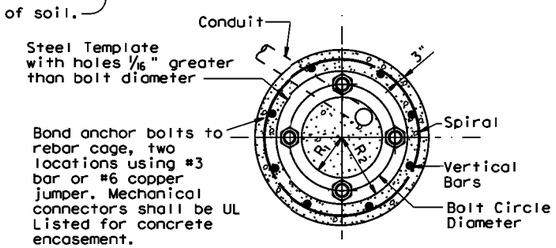

TOP VIEW

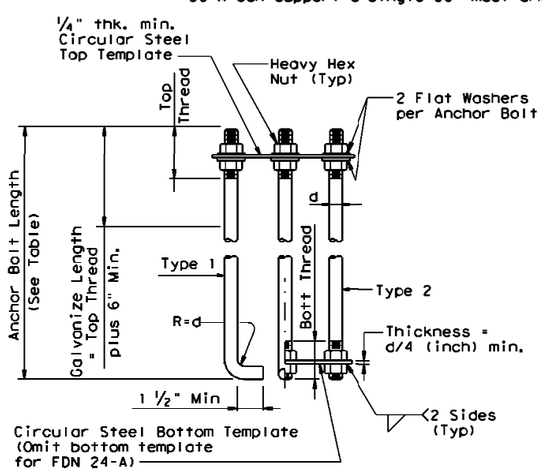

HOOKED ANCHOR (TYPE 1) | NUT ANCHOR (TYPE 2)

ANCHOR BOLT ASSEMBLY

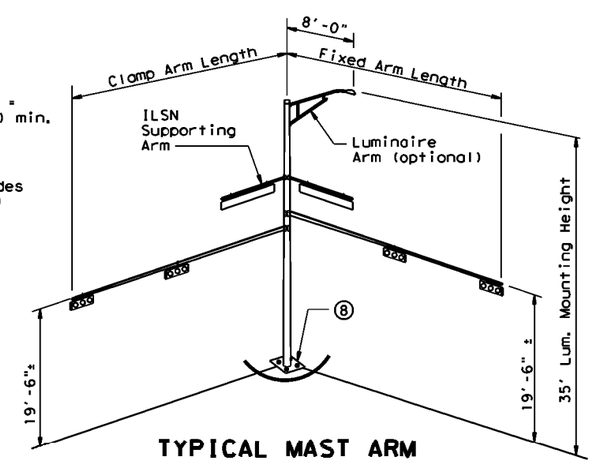

⑧ Orient anchor bolts orthogonal with the fixed arm direction to ensure that two bolts are in tension under dead load.

TYPICAL MAST ARM ASSEMBLY

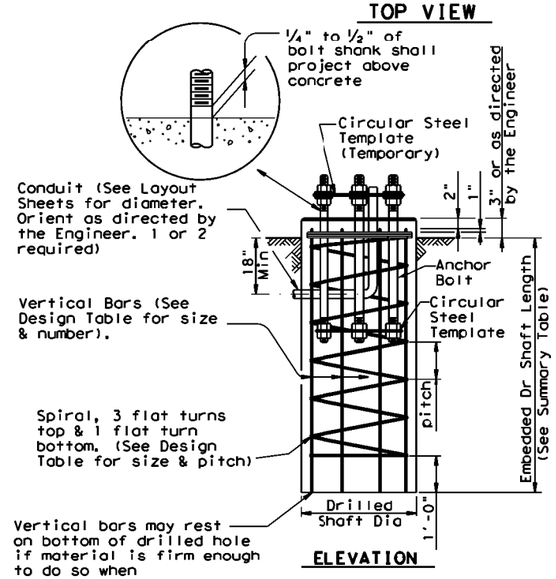

ELEVATION

FOUNDATION DETAILS

GENERAL NOTES:

Design conforms to 1994 AASHTO Standard Specifications for Structural Supports for Highway Signs, Luminaires and Traffic Signals and interim revisions thereto.

Reinforcing steel shall conform to Item 440, "Reinforcing Steel".

Concrete shall be Class "C".

Threads for anchor bolts and nuts shall be rolled or cut threads of 8UN series up to 2" in diameter or UNC series for all sizes. Bolts and nuts shall have Class 2A and 2B fit tolerances. Galvanized nuts shall be tapped after galvanizing.

Anchor bolts that are larger than 1" in diameter shall conform to "alloy steel" or "medium-strength mild steel" per Item 449, "Anchor Bolts". Anchor bolts that are 1" in diameter or less shall conform to ASTM A36. Galvanize a minimum of the top end thread length plus 6" for all anchor bolts unless otherwise noted. Exposed washers and exposed nuts shall be galvanized. All galvanizing shall be in accordance with Item 445, "Galvanizing".

Templates and embedded nuts need not be galvanized. Lubricate and tighten anchor bolts when erecting the structure in accordance with Item 449, "Anchor Bolts".

STATE OF TEXAS
MIFTAH SHEMSU SEMANE
123456
LICENSED PROFESSIONAL ENGINEER

MIFTAH SHEMSU SEMANE, P.E.
2/26/2025

Texas Department of Transportation
Traffic Operations Division

TRAFFIC SIGNAL POLE FOUNDATION

TS-FD-12

© TxDOT August 1995

DN: MS	CK: JSY	DW: MAO/MMF	CK: JSY/TEB
REVISIONS 5-95 11-99 1-12	CONT 0922	SECT 33	JOB 076	HIGHWAY CS
	DIST LRD	COUNTY WEBB	SHEET NO. 128

DATE:
FILE:

DISCLAIMER: The use of this standard is governed by the "Texas Engineering Practice Act". No warranty of any kind is made by TxDOT for any purpose whatsoever. TxDOT assumes no responsibility for the conversion of this standard to other formats or for incorrect results or damages resulting from its use.

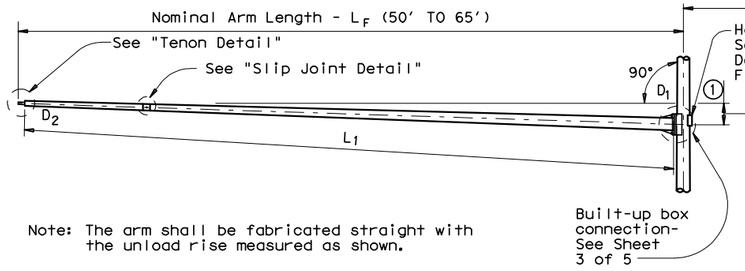

Note: The arm shall be fabricated straight with the unload rise measured as shown.

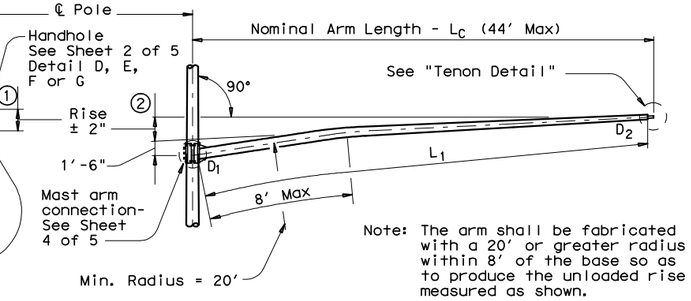

Note: The arm shall be fabricated with a 20' or greater radius within 8' of the base so as to produce the unloaded rise measured as shown.

FIXED MOUNT TRAFFIC SIGNAL ARM

① See Sheet 3 of 5 for Arm Rise

CLAMP-ON TRAFFIC SIGNAL ARM (IF REQUIRED)

② See Sheet 4 of 5 for Arm Rise and Clamp-on Arm Details

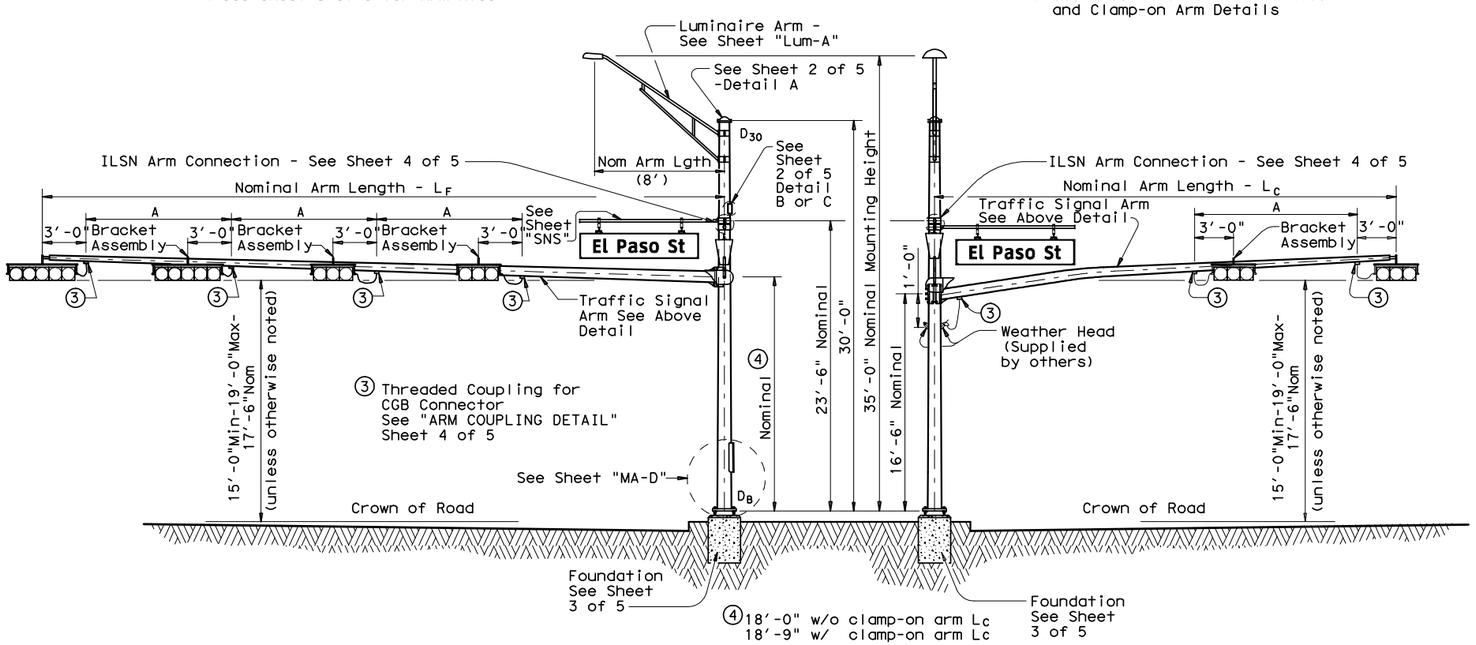

ELEVATION

(Showing fixed mount arm)

STRUCTURE ASSEMBLY

ELEVATION

(Showing clamp-on arm)

TABLE OF DIMENSIONS "A"										
Arm Length	24'	28'	32'	36'	40'	44'	50'	55'	60'	65'
Arm Type II	10'	11'	12'	13'						
Arm Type III			10'	11'	12'	12'				
Arm Type IV							12'	12'	12'	12'

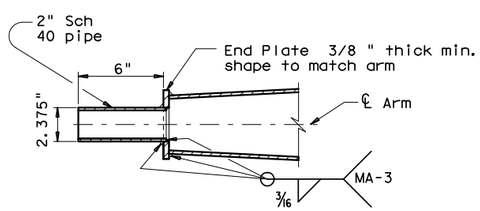

TENON DETAIL

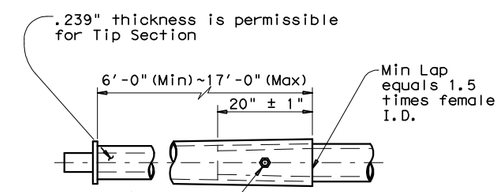

Note: A slip joint is permissible for arms 50' and greater in length. The slip joint shall be made in the shop, but may be match marked and shipped disassembled.

4 - ¾" Dia holes and 1- ⅝" Dia galv A307 bolt. Tack weld nut to thread projection after making joint. Repair damaged galvanizing in accordance with Item 445, "Galvanizing".

SLIP JOINT DETAIL (FIXED MOUNT ARM)

GENERAL NOTES:

Design conforms to 1994 AASHTO Standard Specifications for Structural Supports for Highway Signs, Luminaires, and Traffic Signals and Interim Specifications thereto. Design Wind Speed can be either 100 mph or 80 mph plus a 1.3 gust factor. If clamp-on traffic signal is required, designs are based on an arm included angle of 90 degrees or more. Angles of less than approximately 75 degrees will require a special design.

Poles are designed to support one 8'-0" luminaire arm, two 9'-0" internally lighted street name (ILSN) signs and two traffic signal arms with limited length combinations.

Each arm with its related attachment is shown below

Arm	Equivalent DL ⑤	WL EPA ⑤⑥
8' Luminaire Arm	Luminaire 60 lbs	1.6 sq ft
9' ILSN Arm	Sign 85 lbs	11.5 sq ft
50' to 65' Fixed Mount Arm	Signal Loads 310 lbs	52 sq ft
Up to 44' Clamp-on Arm	Signal Loads 180 lbs	32.4 sq ft

⑤ Equivalent dead load plus horizontal wind load applied at the end of arm except ILSN arm, which applied 4.5' from the centerline of the pole.

⑥ Effective projected area (actual area times drag coefficient) for the application of horizontal wind load.

Except as noted in Sheet 1 thru 5 of 5, other details not covered shall refer to Standard Sheet "MA-D" for pole details, "LUM-A" for luminaire arm and connection details, "SNS" for internally lighted street name sign details, and "TS-FD" for anchor bolt and foundation details.

Fabrication shall be in accordance with Item 686, "Traffic Signal Pole Assemblies (Steel)" and with the details, dimensions, and weld procedures shown herein. Weld references call for preapproved weld procedures which the Fabricator must obtain prior to fabrication. Material, fabrication tolerances, and shipping practices shall also meet the requirements of this sheet and Item 686, "Traffic Signal Pole Assemblies (Steel)".

Unless otherwise noted, all parts shall be galvanized in accordance with Item 445, "Galvanizing" after fabrication.

Deviations from the details and dimensions shown herein require submission of shop drawings in accordance with the Item 441, "Steel Structures". Alternate designs are not acceptable.

Installation of damping plate for the long mast arm is not recommended.

Provision of the bracket assembly used to support the traffic signal heads shall be under the direction of the Engineer for approval.

Design also conforms to NCHRP Report 412 for fatigue resistance except that there are no stiffeners at the base plate. TxDOT is conducting tests to determine if stiffeners at the base plate will or will not result in optimal performance; depending upon the results of the tests, poles may need a retrofit to ensure optimal fatigue performance.

Texas Department of Transportation
Traffic Operations Division

TRAFFIC SIGNAL SUPPORT STRUCTURES

LONG MAST ARM ASSEMBLY (50 TO 65 FT) (80 AND 100 MPH WIND ZONE)

LMA(1)-12

Sheet 1 of 5

© TxDOT July 2000

DN: TxDOT	CK: TxDOT	DW: TxDOT	CK: TxDOT

REVISIONS: 4-20-01, 1-12

CONT	SECT	JOB	HIGHWAY
0922	33	076	CS
DIST		COUNTY	SHEET NO.
LRD		WEBB	129

131A

DATE:
FILE:

DISCLAIMER: The use of this standard is governed by the "Texas Engineering Practice Act". No warranty of any kind is made by TxDOT for any purpose whatsoever. TxDOT assumes no responsibility for the conversion of this standard to other formats or for incorrect results or damages resulting from its use.

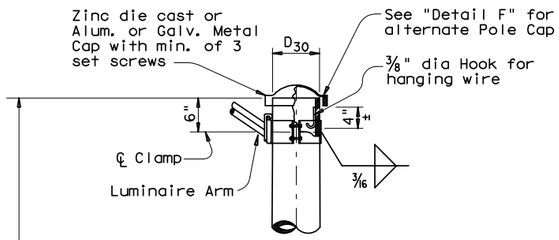

DETAIL A

(for pole with luminaire)

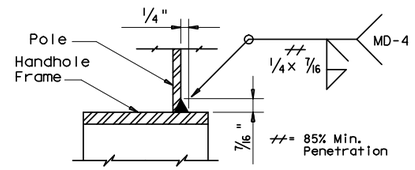

DETAIL H

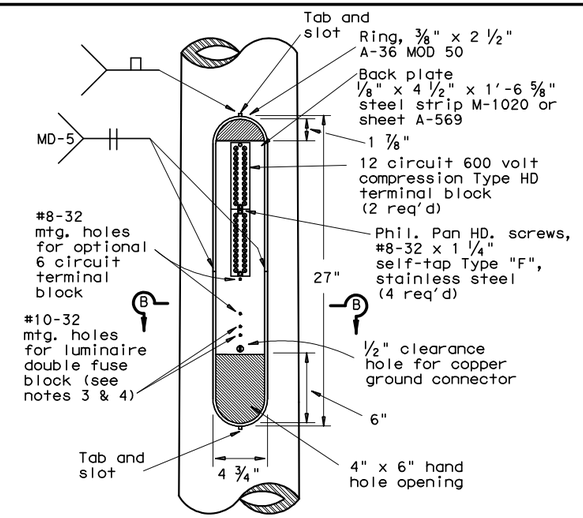

ACCESS COMPARTMENT

MATERIALS	
Round Shafts or Polygonal Shafts (7)	ASTM A595 Gr.A, A588, A1008 HSLAS Gr.50 Class 2, A1011 HSLAS Gr.50 Class 2, A572 Gr.50 or A1011 SS Gr.50 (8)
Plates (7)	ASTM A36, A588, or A572 Gr.50
Connection Bolts	ASTM A325, or A449 except where noted
Pin Bolts	ASTM A325
Pipe (7)	ASTM A53 Gr.B, A501, A1008 HSLAS-F Gr.50, A1011 HSLAS-F Gr.50
Misc. Hardware	Galvanized steel or stainless steel or as noted

(7) ASTM A572, A1008 HSLAS, A1011 HSLAS, A1008 HSLAS-F, A1011 HSLAS-F, or A1011 SS may have higher yield strengths but shall not have less elongation than the grade indicated.

(8) ASTM A1011 SS Gr.50 shall also have a minimum elongation of 18 percent in 8 inches or 23 percent in 2 inches. Material thickness in excess of those stipulated under A1011 SS will be acceptable providing the material meets all other A1011 SS requirements and the requirements of this item.

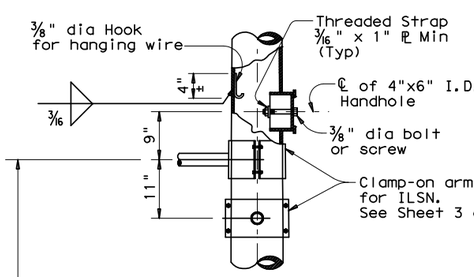

DETAIL B

(If ILSN applied)

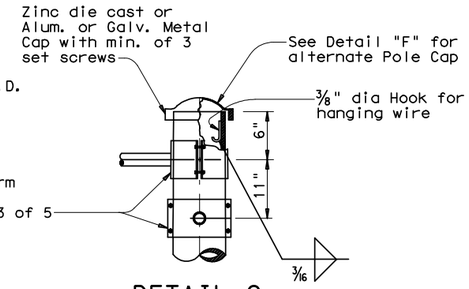

DETAIL C

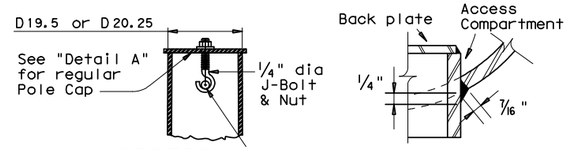

SECTION Y-Y

DETAIL J

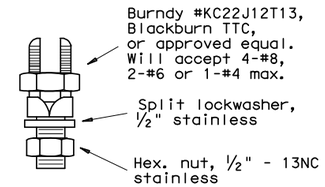

COPPER GROUND CONNECTOR

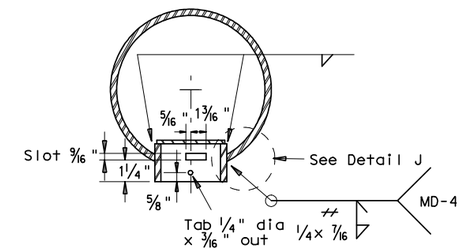

SECTION B-B

Opening for access compartment shall be no more than 1/16 inch wider than the access compartment itself.

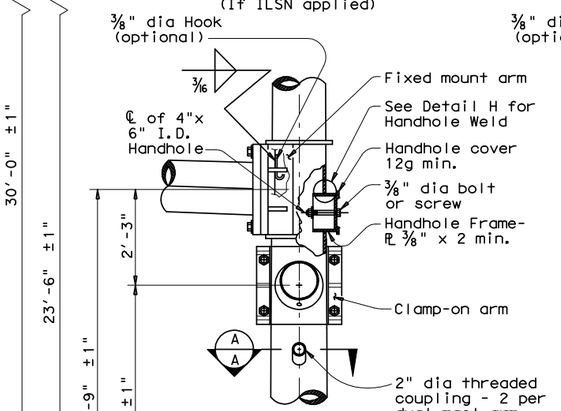

DETAIL D

(for 30' pole with luminaire and ILSN sign)

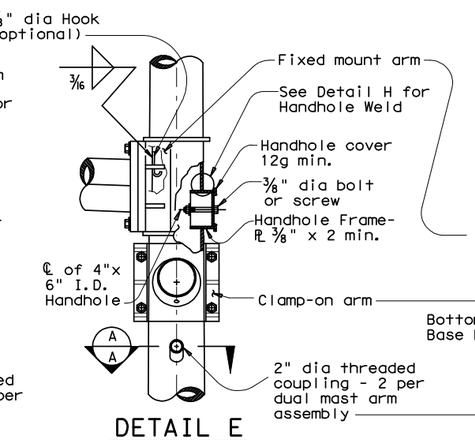

DETAIL E

(for 24' pole with ILSN sign and no luminaire, single or dual mast arm)

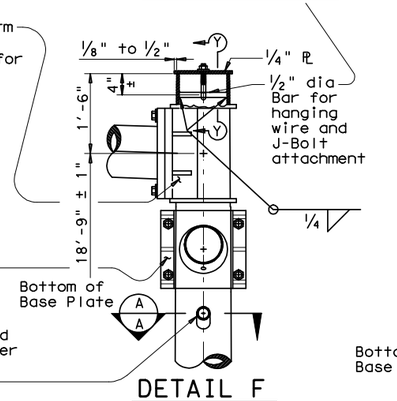

DETAIL F

(for 20.25' pole with no ILSN sign and no luminaire, dual mast arm)

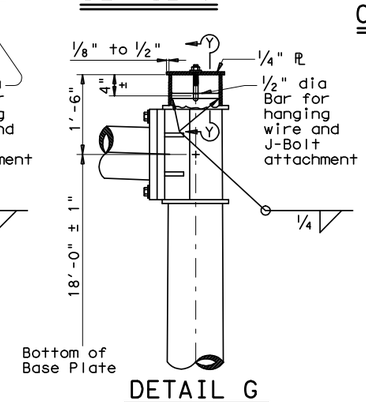

DETAIL G

(for 19.5' pole with no ILSN sign and no luminaire, single mast arm)

ACCESS COMPARTMENT NOTES:

1. The cover shall be one piece formed from ABS plastic, shall be a pearl gray color, and shall be suitable for exposure to harsh sunlight and extreme weather. Cover shall latch with two screw latches and shall fit tightly to the enclosure ring to create a rainproof seal. Latch screws shall be 1/4-20 stainless flat socket head screws with tamper proof feature.
2. The pole manufacturer shall provide with each pole a separate kit consisting of: one cover with two latching assemblies, two terminal strips (Marathon #985GP12CU or approved equal), four #8-32 x 1 1/4" self tapping type "F" stainless steel pan head screws, and one ground connector (Blackburn TTC, Burndy KC22J12T13, or Ilsco SSS-5). The traffic signal contractor shall install the kit items in the field.
3. The screw hole spacing on the enclosure back plate shall be for two Marathon #985GP12 terminal strips, one Marathon #985GP06CU terminal strip, and one Bussmann #BM6032B fuse block.
4. Install one Bussmann #BM6032B, Littelfuse #L60030M-2C, or Ferraz-Shawmut #30352 fuse block for poles where luminaires are to be installed.

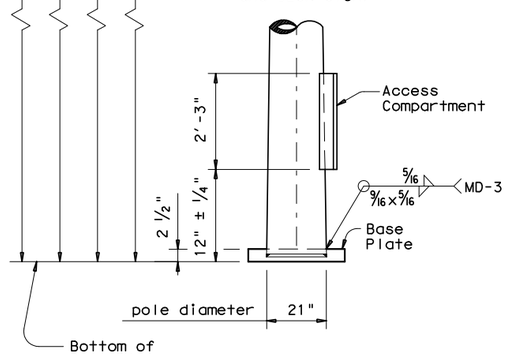

POLE ELEVATION

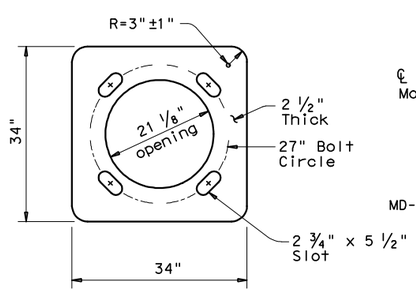

BASE PLATE

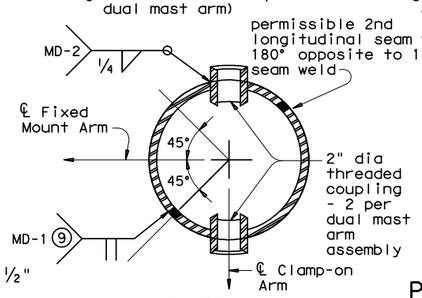

SECTION A-A

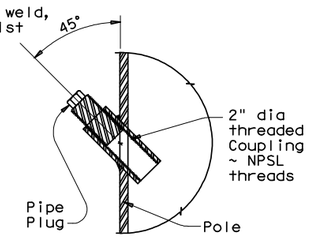

POLE COUPLING DETAIL

(9) Longitudinal seam weld must be oriented within 90° (45° rotation each side) along the fixed mount arm. 60% min penetration required, 100% penetration within 6" of circumferential base weld.

Texas Department of Transportation
Traffic Operations Division

TRAFFIC SIGNAL SUPPORT STRUCTURES

LONG MAST ARM ASSEMBLY (50 TO 65 FT) (80 AND 100 MPH WIND ZONE)

LMA(2)-12

Sheet 2 of 5

© TxDOT July 2000

DN: JSY	CK: ARC	DW: TGG	CK: JSY

REVISIONS: 4-20-01, 1-12

CONT	SECT	JOB	HIGHWAY
0922	33	076	CS
DIST		COUNTY	SHEET NO.
LRD		WEBB	130

131B

DATE:
FILE:

DISCLAIMER: The use of this standard is governed by the "Texas Engineering Practice Act". No warranty of any kind is made by TxDOT for any purpose whatsoever. TxDOT assumes no responsibility for the conversion of this standard to other formats or for incorrect results or damages resulting from its use.

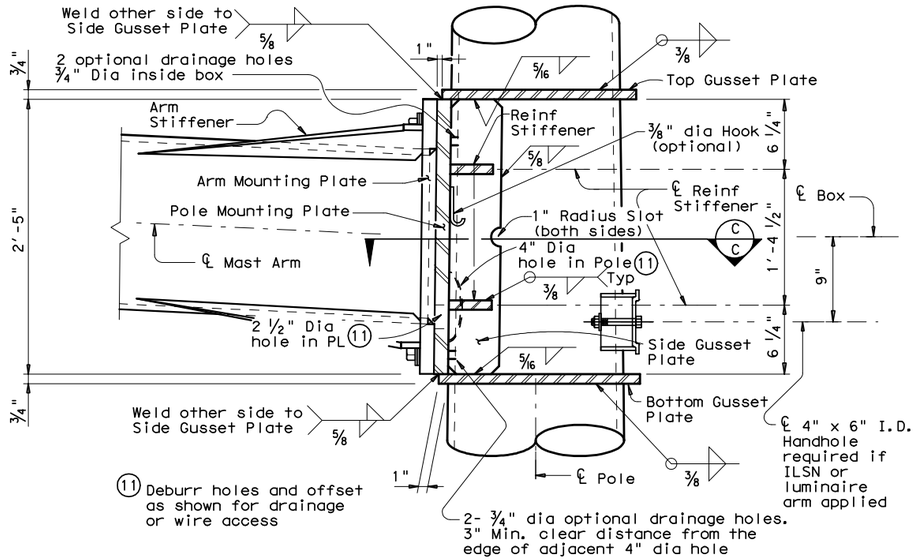

BUILT-UP BOX CONNECTION

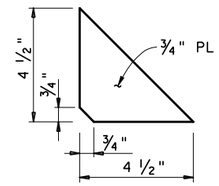

REINFORCING STIFFENER

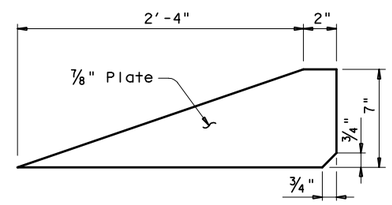

ARM STIFFENER
(Cut to match arm inclination and taper)

Provide Detail shown in SECTION F-F or equivalent 100% complete joint penetration weld from both sides.

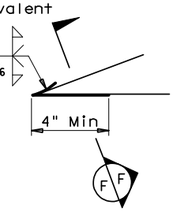

Only 4" length at tip of Arm Stiffener requires a complete joint penetration weld. Smooth weld radius to connect Stiffener. Only a fillet weld is required for the remaining weld length.

DETAIL "K"

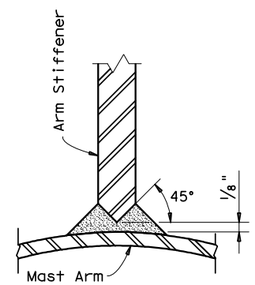

SECTION F-F

Fixed Mount Arm L_F	ROUND POLES (13)					Foundation Type
	D_B	$D_{19.5}$ or $D_{20.25}$	D_{24}	D_{30}	(12) thk	
ft.	in.	in.	in.	in.	in.	
50', 55' 60', 65'	21.0	18.2	17.6	16.8	.3125	48-A

Fixed Mount Arm L_F	ROUND ARMS (13)				
	L_1	D_1	D_2	(12) thk	Rise
ft.	ft.	in.	in.	in.	
50	49	18.5	11.7	.3125	3'- 3"
55	54	18.5	11.0	.3125	3'- 7"
60	59	18.5	10.3	.3125	3'-11"
65	64	18.5	9.6	.3125	4'- 4"

D_B = Pole Base O.D.
$D_{19.5}$ = Pole Top O.D. with no Luminaire and no ILSN (single mast arm)
$D_{20.25}$ = Pole Top O.D. with no Luminaire and no ILSN (dual mast arm)
D_{24} = Pole Top O.D. with ILSN w/out Luminaire
D_{30} = Pole Top O.D. with Luminaire
D_1 = Arm Base O.D.
D_2 = Arm End O.D.
L_1 = Shaft Length
L_F = Fixed Arm Length

(12) Thickness shown is minimum, thicker materials may be used.

(13) Shaft profile 16-sided or 18-sided is considered to be equivalent to round section.

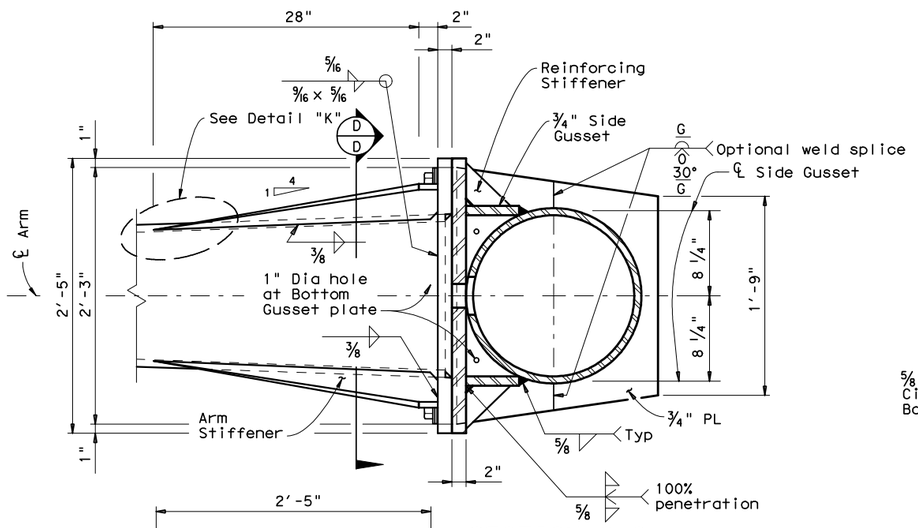

SECTION C-C

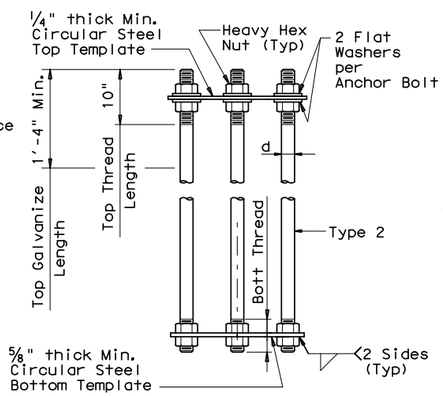

NUT ANCHOR
(TYPE 2)

ANCHOR BOLT ASSEMBLY

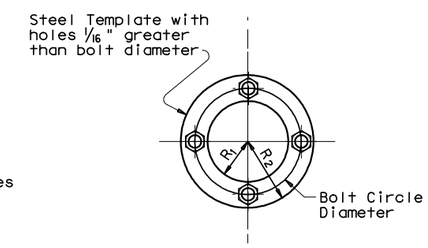

TEMPLATE DETAIL

GENERAL NOTES:

Built-up Box Connection: For the welded arm-to-pole connection as a build-up box configuration illustrated here is an example only, fabricators are required to submit a shop drawing of box connection for approval. The drawing shall specify the details of each box element, welds of arm-to-pole connection, arm-to-plate socket connection, and arm rise creation. Specify the proper location of drain holes along the pole. 2 1/2" dia hole in the pole mounting plate and 4" dia hole in the pole need to be aligned for wiring access or drainage. Arm stiffeners cut to match arm inclination and taper shall also be included.

The deviation from flat for either arm or pole mounting plate shall not exceed 3/32 in., which is measured along the center of mounting plate to a radial distance of 13.5 in. The deformed-from-flat connection between arm and pole mounting plates shall not be allowed if the center of both mounting plates cannot contact directly.

Fixed mount details are used for single mast arm assemblies and for the first arm on dual mast arm assemblies.

ANCHOR BOLT & TEMPLATE SIZE						
Bolt Dia in.	Length ‡	Top Thread	Bottom Thread	Bolt Circle	R_2	R_1
2 1/2"	5'-2"	10"	6 1/2"	27"	16"	11"

‡ Min dimension given, longer bolts are acceptable.

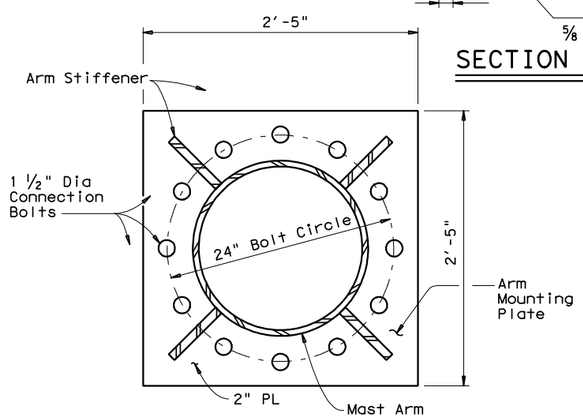

SECTION D-D

FOUNDATION DESIGN TABLE													
FDN TYPE	DRILLED SHAFT DIA	REINFORCING STEEL		DRILLED SHAFT LENGTH-ft (16), (17), (18)			ANCHOR BOLT DESIGN (14)				FOUNDATION DESIGN LOAD (15)		TYPICAL APPLICATION
		VERT BARS	SPIRAL & PITCH	TEXAS CONE PENETROMETER N blows/ft			ANCHOR BOLT DIA	Fy (ksi)	BOLT CIR DIA	ANCHOR TYPE	MOMENT K-ft	SHEAR Kips	
				10	15	40							
48-A	48"	20 #9	#4 at 6"	21.9	19.5	14.7	2 1/2"	55	27"	2	490	10	50' to 65' Mast arm assembly.

SEE SHEET "TS-FD" FOR ADDITIONAL DETAILS.

(14) Anchor bolt design develops the foundation capacity given under Foundation Design Laods.

(15) Foundation Design Loads are the allowable moments and shears at the base of the structure.

(16) Field Penetrometer readings at a depth of approximately 3 to 5 feet may be used to adjust shaft lengths.

(17) If rock is encountered, the Drilled Shaft shall extend a minimum of two diameters into solid rock.

(18) Decimal lengths in Design Table are to allow interpolation for other penetrometer values. Round to nearest foot for entry into Summary Table.

Texas Department of Transportation
Traffic Operations Division

TRAFFIC SIGNAL SUPPORT STRUCTURES
LONG MAST ARM ASSEMBLY (50 TO 65 FT) (80 AND 100 MPH WIND ZONE)

Sheet 3 of 5 — LMA(3)-12

©TxDOT July 2000

DN: JSY	CK: ARC	DW: TGG	CK: JSY

REVISIONS: 4-20-01, 1-12

CONT	SECT	JOB	HIGHWAY
0922	33	076	CS
DIST		COUNTY	SHEET NO.
LRD		WEBB	131

131C

DATE:
FILE:

DISCLAIMER: The use of this standard is governed by the "Texas Engineering Practice Act". No warranty of any kind is made by TxDOT for any purpose whatsoever. TxDOT assumes no responsibility for the conversion of this standard to other formats or for incorrect results or damages resulting from its use.

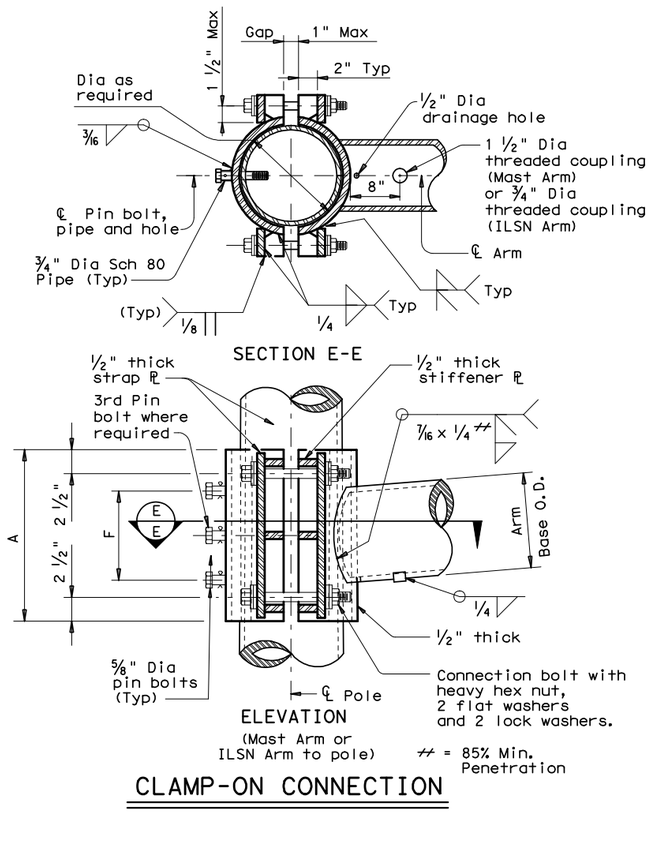

CLAMP-ON CONNECTION

80 MPH WIND

Clamp-on Arm Lc	ROUND ARMS					POLYGONAL ARMS				
	L_1	D_1	D_2	thk (12)	Rise	L_1	D_1	D_2	thk (12)	Rise
ft.	ft.	in.	in.	in.		ft.	in.	in.	in.	
20	19.1	6.5	3.8	.179	1'-9"	19.1	7.0	3.5	.179	1'-8"
24	23.1	7.5	4.3	.179	1'-10"	23.1	7.5	3.5	.179	1'-9"
28	27.1	8.0	4.2	.179	1'-11"	27.1	8.0	3.5	.179	1'-10"
32	31.0	9.0	4.7	.179	2'-1"	31.0	9.0	3.5	.179	2'-0"
36	35.0	9.5	4.6	.179	2'-4"	35.0	10.0	3.5	.179	2'-1"
40	39.0	9.5	4.1	.239	2'-8"	39.0	9.5	3.5	.239	2'-3"
44	43.0	10.0	4.1	.239	2'-11"	43.0	10.0	3.5	.239	2'-6"

100 MPH WIND

Clamp-on Arm Lc	ROUND ARMS					POLYGONAL ARMS				
	L_1	D_1	D_2	thk (12)	Rise	L_1	D_1	D_2	thk (12)	Rise
ft.	ft.	in.	in.	in.		ft.	in.	in.	in.	
20	19.1	8.0	5.3	.179	1'-8"	19.1	8.0	3.5	.179	1'-7"
24	23.1	9.0	5.8	.179	1'-9"	23.1	9.0	3.5	.179	1'-8"
28	27.1	9.5	5.7	.179	1'-10"	27.1	10.0	3.5	.179	1'-9"
32	31.0	9.5	5.2	.239	1'-11"	31.0	9.5	3.5	.239	1'-10"
36	35.0	10.0	5.1	.239	2'-0"	35.0	10.0	3.5	.239	1'-11"
40	39.0	10.5	5.1	.239	2'-3"	39.0	11.0	3.5	.239	2'-1"
44	43.0	11.0	5.1	.239	2'-8"	43.0	11.5	4.0	.239	2'-3"

D1 = Arm Base O.D.
D2 = Arm End O.D.
L1 = Shaft Length
Lc = Clamp-on Arm Length

(12) Thickness shown is minimum, thicker materials may be used.

CLAMP-ON ARM CONNECTION

ILSN Arm Size		A	F	4 Conn. Bolts	⅝" Dia. Pin Bolts
Sch 40 pipe Dia	Thick			Dia	No.
in.	in.	in.	in.	in.	ea
3	.216	10	4	¾	2

Mast Arm Size		A	F	4 Conn. Bolts	⅝" Dia. Pin Bolts
Base Dia	Thick			Dia	No.
in.	in.	in.	in.	in.	ea
6.5	.179	12	6	1	2
7.5	.179	14	8	1	2
8.0	.179	14	8	1	2
9.0	.179	16	10	1	2
9.5	.179	18	12	1 ¼	3
9.5	.239	18	12	1 ¼	3
10.0	.239	18	12	1 ¼	3
10.5	.239	18	12	1 ¼	3
11.0	.239	18	12	1 ¼	3
11.5	.239	18	12	1 ¼	3

GENERAL NOTES:

Clamp-on details are used for the second arm on dual mast arm assemblies or ILSN arm support. For a clamp-on mast arm, a maximum 1 ½" wide vertical slotted hole may be cut in the front clamp plate to facilitate drainage during galvanizing. The slot shall be centered behind the arm and shall be no longer than the arm diameter minus 1". For an ILSN arm, a 1 ½" diameter hole shall be cut in the front clamp plate for wire access. A matched hole shall be field drilled through the pole to provide wire access after arm is oriented. Deburr both holes.

Where duplicate parts occur on a detail, welds shown for part shall apply to all similar parts on the detail.

Pin bolts are required to prevent rotation of clamp-on arms under design wind forces. Pin bolts shall be ASTM A325 with threads excluded from the shear plane. Pin bolt and ¾" diameter pipe shall have 3/16" diameter holes for a ⅛" diameter galvanized cotter pin. Back clamp plate shall be furnished with a ¾" diameter hole for each pin bolt. An 11/16" diameter hole for each pin bolt shall be field drilled through the pole after arm orientations have been approved by the Engineer.

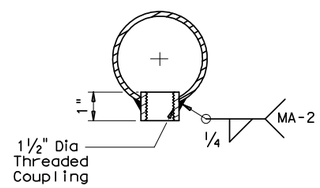

ARM COUPLING DETAIL

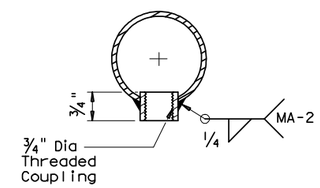

ILSN ARM COUPLING DETAIL

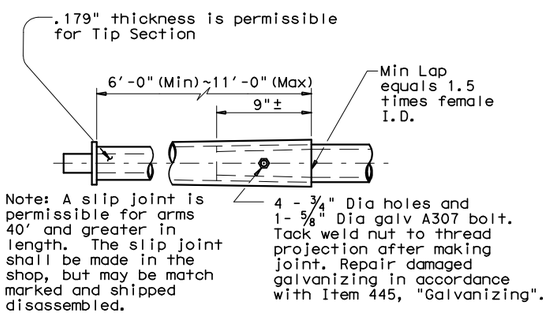

SLIP JOINT DETAIL (CLAMP-ON ARM)

Stainless steel bands (or Cables) and cast bracket as in "Astro-Brac", "Sky Bracket" or "Easy Bracket" with 1 ½" Dia Threaded Coupling.

BRACKET ASSEMBLY

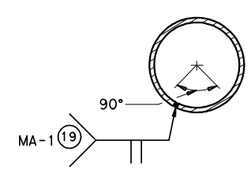

ARM WELD DETAIL

(19) Longitudinal Seam Weld must be oriented within the lower 90° of the signal arm.
60% Min penetration
100% penetration within 6" of circumferential base welds.

Texas Department of Transportation
Traffic Operations Division

TRAFFIC SIGNAL SUPPORT STRUCTURES
LONG MAST ARM ASSEMBLY (50 TO 65 FT) (80 AND 100 MPH WIND ZONE)

Sheet 4 of 5 — LMA(4)-12

© TxDOT November 2000

DN: JK	CK: GRB	DW: FDN	CK: CAL

REVISIONS: 4-20-01, 1-12

CONT	SECT	JOB	HIGHWAY
0922	33	076	CS
DIST		COUNTY	SHEET NO.
LRD		WEBB	132

131D

DATE:
FILE:

DISCLAIMER: The use of this standard is governed by the "Texas Engineering Practice Act". No warranty of any kind is made by TxDOT for any purpose whatsoever. TxDOT assumes no responsibility for the conversion of this standard to other formats or for incorrect results or damages resulting from its use.

Shipping Parts List

Ship each pole with the following attached: enlarged hand hole, pole cap, fixed arm connection bolts and washers, and any additional hardware listed in the table.

Nominal Arm Length	30' Poles with Luminaire		24' Poles with ILSN		19.50' (Single Mast Arm) 20.25' (Dual Mast Arm) Poles with no Luminaire and no ILSN	
	See note above plus: one (or two if ILSN attached) small hand hole, clamp-on simplex		See note above plus one small hand hole		See note above	
Single Mast Arm						
Lf ft.	Designation	Quantity	Designation	Quantity	Designation	Quantity
50	50L		50S		50	
55	55L		55S		55	
60	60L	2	60S		60	
65	65L	1	65S		65	

Dual Mast Arm

Lf ft.	Lc ft.	Designation	Quantity	Designation	Quantity	Designation	Quantity
50	20	5020L		5020S		5020	
	24	5024L		5024S		5024	
	28	5028L		5028S		5028	
	32	5032L		5032S		5032	
	36	5036L		5036S		5036	
	40	5040L		5040S		5040	
	44	5044L		5044S		5044	
55	20	5520L		5520S		5520	
	24	5524L		5524S		5524	
	28	5528L		5528S		5528	
	32	5532L		5532S		5532	
	36	5536L		5536S		5536	
	40	5540L		5540S		5540	
	44	5544L		5544S		5544	
60	20	6020L		6020S		6020	
	24	6024L		6024S		6024	
	28	6028L		6028S		6028	
	32	6032L		6032S		6032	
	36	6036L		6036S		6036	
	40	6040L		6040S		6040	
	44	6044L		6044S		6044	
65	20	6520L		6520S		6520	
	24	6524L		6524S		6524	
	28	6528L		6528S		6528	
	32	6532L		6532S		6532	
	36	6536L		6536S		6536	
	40	6540L		6540S		6540	
	44	6544L		6544S		6544	

Shipping Parts List

Traffic Signal Arms (Fixed Mount) (1 per pole)
Ship each arm with listed equipment attached

Nominal Arm Length	Type IV Arm (4 Signals) 3 Bracket Assembly and 4 CGB Connectors	
ft.	Designation	Quantity
50	50IV	
55	55IV	
60	60IV	2
65	65IV	1

Luminaire Arms (1 per 30' pole)

Nominal Arm Length	Quantity
8' Arm	3

ILSN Arm (Max. 2 per pole) Ship with clamps, bolts and washers

Nominal Arm Length	Quantity
7' Arm	
9' Arm	

Traffic Signal Arms (80 MPH Clamp-On Mount) (1 per pole) Ship each arm with listed equipment attached

Nominal Arm Length	Type I Arm (1 Signal) 2 CGB connector and 1 clamp w/bolts and washers		Type II Arm (2 Signals) 1 Bracket Assembly and 3 CGB connectors, and 1 clamp w/bolts and washers		Type III Arm (3 Signals) 2 Bracket Assembly and 4 CGB connectors, and 1 clamp w/bolts and washers	
ft.	Designation	Quantity	Designation	Quantity	Designation	Quantity
20	20I-80					
24	24I-80		24II-80			
28	28I-80		28II-80			
32			32II-80		32III-80	
36			36II-80		36III-80	
40					40III-80	
44					44III-80	

Traffic Signal Arms (100 MPH Clamp-On Mount) (1 per pole) Ship each arm with listed equipment attached

Nominal Arm	Type I Arm (1 Signal) 2 CGB connector and 1 clamp w/bolts and washers		Type II Arm (2 Signals) 1 Bracket Assembly and 3 CGB connectors, and 1 clamp		Type III Arm (3 Signals) 2 Bracket Assembly and 4 CGB connectors, and 1 clamp	
ft.	Designation	Quantity	Designation	Quantity	Designation	Quantity
20	20I-100					
24	24I-100		24II-100			
28	28I-100		28II-100			
32			32II-100		32III-100	
36			36II-100		36III-100	
40					40III-100	
44					44III-100	

Anchor Bolt Assemblies (1 per pole)

Anchor Bolt Diameter	Anchor Bolt Length	Quantity
2 1/2 "	5' - 3"	

Each anchor bolt assembly consists of the following: Top and bottom templates, 4 anchor bolts, 8 nuts, 8 flat washers and 4 nut anchor devices (type 2) per Standard Drawing "TS-FD". Templates may be removed for shipment.

Foundation Summary Table **

Location Ident.	Avg. N Blow/ft.	No. Each	Drill Shaft *** Length (feet) 48-A
POLE "P-B"	10	1	22'
POLE "P-E"	10	1	22'
POLE "P-F"	10	1	22'
Total Drill Shaft Length			66'

Notes

** Foundations may be listed separately or grouped according to similarity of location and type. Quantities are for the Contractor's information only.

*** Decimal lengths in Design Table are to allow interpolation for other penetrometer values. Round to nearest foot for entry into Summary Table.

Abbreviations

Lf= Fixed Arm Length
Lc= Clamp-on Arm Length (44' Max.)

STATE OF TEXAS
MIFTAH SHEMSU SEMANE
123456
LICENSED
PROFESSIONAL ENGINEER

MIFTAH SHEMSU SEMANE, P.E.
2/26/2025

Texas Department of Transportation
Traffic Operations Division

LONG MAST ARM ASSEMBLY PARTS LIST

LMA(5)-12

Sheet 5 of 5

©TxDOT November 2000

DN: JK	CK: GRB	DW: FDN	CK: CAL

REVISIONS
4-20-01
1-12

CONT	SECT	JOB	HIGHWAY
0922	33	076	CS
DIST		COUNTY	SHEET NO.
LRD		WEBB	133

DATE:
FILE:

131E

DISCLAIMER:
The use of this standard is governed by the "Texas Engineering Practice Act". No warranty of any kind is made by TxDOT for any purpose whatsoever. TxDOT assumes no responsibility for the conversion of this standard to other formats or for incorrect results or damages resulting from its use.

GENERAL NOTES FOR ALL ELECTRICAL WORK

1. The location of all conduits, junction boxes, ground boxes, and electrical services is diagrammatic and may be shifted to accommodate field conditions.

2. Provide new and unused materials. Ensure that all materials and installations comply with the applicable articles of the National Electrical Code (NEC), TxDOT standards and specifications, National Electrical Manufacturers Association (NEMA), and are listed by Underwriters Laboratories (UL) or a Nationally Recognized Testing Lab (NRTL). NRTLs such as Canadian Standard Association (CSA), Intertek Testing Services NA Inc., or FM Approvals LLC can be considered equivalent to UL. Where reference is made to NEMA listed devices, International Electrotechnical Commission (IEC) listed devices will not be considered an acceptable equal to a NEMA listed device. Acceptable devices may have both a NEMA and IEC listing. Faulty fabrication or poor workmanship in any material, equipment, or installation is justification for rejection. Replace or reinstall rejected material or equipment at no additional cost to the Department.

3. Miscellaneous nuts, bolts and hardware, except for high strength bolts, may be stainless steel when plans specify galvanized, provided the bolt size is ½ in. or less in diameter.

4. Provide the following test equipment as required by the Engineer to confirm compliance with the contract and the NEC: voltmeter, ammeter, megohm meter (1000 volt DC), ground resistance tester, torque wrenches, and torque screwdrivers. Ensure all equipment has been properly calibrated within the last year. Provide calibration certification to the Engineer upon request. Operate test equipment during inspection as requested by the Engineer.

5. Install grounding as shown on the plans and in accordance with the NEC. Ensure all metallic conduits; metal poles; luminaires; and metal enclosures are bonded to the equipment grounding conductor. Provide stranded bare copper or green insulated grounding conductors. Ground rods, connectors, and bonding jumpers are subsidiary to the various bid items.

6. When required by the Engineer, notify the Department in writing of materials from the Material Producers List (MPL) intended for use on each project. Prequalified materials are listed on the MPL on TxDOT's website under "Roadway Illumination and Electrical Supplies." No substitutions will be allowed for materials on this list.

CONDUIT

A. MATERIALS

1. Provide conduit, junction boxes, fittings, and hardware as per TxDOT Departmental Material Specification (DMS) 11030 "Conduit" and Item 618 "Conduit" of TxDOT's "Standard Specifications For Construction And Maintenance Of Highways, Streets, And Bridges," latest edition. Provide conduits listed under Item 618 on the MPL under "Roadway Illumination and Electrical Supplies." Provide conduit types according to the descriptive code or as shown on the plans. Do not substitute other types of conduits for those shown. Provide liquidtight flexible metal conduit (LFMC) when flexible conduit is called for on galvanized steel rigid metallic conduit (RMC) systems. Provide liquidtight flexible nonmetallic conduit (LFNC) when flexible conduit is called for on polyvinyl chloride (PVC) systems.

2. Provide galvanized steel RMC for all exposed conduits, unless otherwise shown on the plans. Properly bond all metal conduits.

3. Unless otherwise shown on the plans, provide junction boxes with a minimum size as shown in the following table, which applies to the greatest number of conductors entering the box through one conduit with no more than four conduits per box. When a mixture of conductor sizes is present, count the conductors as if all are of the larger size. For situations not applicable to the table, size junction boxes in accordance with NEC.

AWG	3 CONDUCTORS	5 CONDUCTORS	7 CONDUCTORS
#1	10" x 10" x 4"	12" x 12" x 4"	16" x 16" x 4"
#2	8" x 8" x 4"	10" x 10" x 4"	12" x 12" x 4"
#4	8" x 8" x 4"	10" x 10" x 4"	10" x 10" x 4"
#6	8" x 8" x 4"	8" x 8" x 4"	10" x 10" x 4"
#8	8" x 8" x 4"	8" x 8" x 4"	8" x 8" x 4"

4. Junction boxes with an internal volume of less than 100 cu. in. and supported by entering raceways must have threaded entries or hubs identified for the intended purpose and supported by connection of two or more rigid metal conduits. Secure conduit within 3 ft. of the enclosure or within 18 in. of the enclosure if all conduit entries are on the same side. Mechanically secure all junction boxes with an internal volume greater than 100 cu. inches.

5. Provide hot dipped galvanized cast iron or sand cast aluminum outlet boxes for junction boxes containing only 10 AWG or 12 AWG conductors. Do not use die cast aluminum boxes. Size outlet boxes according to the NEC.

6. Do not use intermediate metal conduit (IMC) or electrical metallic tubing (EMT) unless specifically required by the plan sheets. When EMT is called for, provide junction boxes made from galvanized steel sheeting, listed and approved for outdoor use, unless otherwise noted on the plans. Size all galvanized steel junction boxes in accordance with the NEC. Provide junction boxes for IMC conduit systems that meet the same requirements for junction boxes used with RMC systems.

7. Provide PVC junction boxes intended for outdoor use on PVC conduit systems, unless otherwise noted on the plans.

8. Provide PVC elbows in PVC conduit systems, unless otherwise shown on the plans. Use only a flat, high tensile strength polyester fiber pull tape for pulling conductors through the PVC conduit system. When galvanized steel RMC elbows are specifically called for in the plans and any portion of the RMC elbow is buried less than 18 in., ground the RMC elbow by means of a grounding bushing on a rigid metal extension. Grounding of the rigid metal elbow is not required if the entire RMC elbow is encased in a minimum of 2 in. of concrete. PVC extensions are allowed on these concrete encased rigid metal elbows. RMC or PVC elbows are subsidiary to various bid items.

9. When required, provide High-Density Polyethylene (HDPE) conduit with factory installed internal conductors according to Item 622 "Duct Cable." At the Contractor's request and with approval by the Engineer, substitute HDPE conduit with no conductors for bored schedule 40 or schedule 80 PVC conduit bid under Item 618. Ensure bored HDPE substituted for PVC is schedule 40 and of the same size PVC called for in the plans. Ensure the substituted HDPE meets the requirements of Item 622, except that the conduit is supplied without factory-installed conductors. Make the transition of the HDPE conduit to PVC (or RMC elbow when required) at the bore pit. Provide conduit of the size and schedule as shown on the plans. Do not extend substituted conduit into ground boxes or foundations. Provide PVC or galvanized steel RMC elbows as called for at all ground boxes and foundations.

10. Use two-hole straps when supporting 2 in. and larger conduits. On electrical service poles, properly sized stainless steel or hot dipped galvanized one-hole standoff straps are allowed on the service riser conduit.

B. CONSTRUCTION METHODS

1. Provide and install expansion joint conduit fittings on all structure-mounted conduits at the structure's expansion joints to allow for movement of the conduit. In addition, provide and install expansion joint fittings on all continuous runs of galvanized steel RMC conduit externally exposed on structures such as bridges at maximum intervals of 150 ft. When requested by the project Engineer, supply manufacturer's specification sheet for expansion joint conduit fittings. Repair or replace expansion joint fittings that do not allow for movement at no additional cost to the Department. Provide the method of determining the amount of expansion to the Engineer upon request. Do not use LFMC or LFNC as a substitute for the required expansion conduit fittings.

2. Space all conduit supports at maximum intervals of 5 ft. Install conduit spacers when attaching metal conduit to surface of concrete structures. See "Conduit Mounting Options" on ED(2). Install conduit support within 3 ft. of all enclosures and conduit terminations.

3. Do not attach conduit supports directly to pre-stressed concrete beams except as shown specifically in the plans or as approved by the Engineer.

4. Unless otherwise shown on the plans, jack or bore conduit placed beneath existing roadways, driveways, sidewalks, or after the base or surfacing operation has begun. Backfill and compact the bore pits below the conduit per Item 476 "Jacking, Boring, or Tunneling Pipe or Box" prior to installing conduit or duct cable to prevent bending of the connections.

5. When placing conduit in the sub-grade of new roadways, backfill all trenches with excavated material unless otherwise noted on the plans. When placing conduit in the sub-base of new roadways, backfill all trenches with cement-stabilized base as per requirements of Items 110 "Excavation", 400 "Excavation and Backfill for Structures", 401 "Flowable Backfill", 402 "Trench Excavation Protection", and 403 "Temporary Special Shoring."

6. Provide and place warning tape approximately 10 in. above all trenched conduit as per Item 618.

7. During construction, temporarily cap or plug open ends of all conduit and raceways immediately after installation to prevent entry of dirt, debris and animals. Temporary caps constructed of durable duct tape are allowed. Tightly fix the tape to the conduit opening. Clean out the conduit and prove it clear in accordance with Item 618 prior to installing any conductors.

8. Ensure conduit entry into the top of any enclosure is waterproof by installing conduit sealing hubs or using boxes with threaded bosses. This includes surface mounted safety switches, meter cans, service enclosures, auxiliary enclosures and junction boxes. Grounding bushings on water tight sealing hubs are not required.

9. Fit the ends of all PVC conduit terminations with bushings or bell end fittings. Provide and install a grounding type bushing on all metal conduit terminations.

10. Install a bonding jumper from each grounding bushing to the nearest ground rod, grounding lug, or equipment grounding conductor. Ensure all bonding jumpers are the same size as the equipment grounding conductor. Bonding of conduit used as a casing under roadways for duct cable is not required, if the duct extends the full length through the casing.

11. At all electrical services, install a 6 AWG solid copper grounding electrode conductor.

12. Place conduits entering ground boxes so that the conduit openings are between 3 in. and 6 in. from the bottom of the box. See the ground box detail on sheet ED(4).

13. Seal ends of all conduits with duct seal, expandable foam, or by other methods approved by the Engineer. Seal conduit immediately after completion of conductor installation and pull tests. Do not use duct tape as a permanent conduit sealant. Do not use silicone caulk as a conduit sealant.

14. File smooth the cut ends of all mounting strut and conduit. Before installing, paint the field cut ends of all mounting strut and RMC (threaded or non-threaded) with zinc rich paint (94% or more zinc content) to alleviate overspray. Use zinc rich paint to touch up galvanized material as allowed under Item 445 "Galvanizing." Do not paint non-galvanized material with a zinc rich paint as an alternative for materials required to be galvanized.

Texas Department of Transportation

Traffic Operations Division Standard

ELECTRICAL DETAILS CONDUITS & NOTES

ED(1)-14

FILE:	ed1-14.dgn	DN:	CK:	DW:	CK:
©TxDOT	October 2014	CONT	SECT	JOB	HIGHWAY
REVISIONS		0922	33	076	CS
		DIST		COUNTY	SHEET NO.
		LRD		WEBB	134

71A

DATE:
FILE:

DISCLAIMER:
The use of this standard is governed by the "Texas Engineering Practice Act". No warranty of any kind is made by TxDOT for any purpose whatsoever. TxDOT assumes no responsibility for the conversion of this standard to other formats or for incorrect results or damages resulting from its use.

ELECTRICAL CONDUCTORS

A. MATERIAL INFORMATION

1. Provide Type XHHW insulated conductors in accordance with Departmental Material Specification (DMS)11040 "Conductors" and Item 620 "Electrical Conductors." Provide conductors as listed on the Material Producers List (MPL) on the Department web site under "Roadway Illumination and Electrical Supplies" Item 620. Color code insulated conductors in conformance with the NEC. Identify grounded (neutral) conductors with white insulation. Identify grounding conductors (ground wires) with green insulation or bare conductors. Identify ungrounded (hot) conductors with any color insulation except green, white, or gray. Keep color scheme consistent throughout the wiring system. Identify conductors 6 American Wire Gauge (AWG) and smaller by continuous color jacket. Identify electrical conductors 4 AWG and larger by continuous color jacket or by colored tape. When identifying conductors with colored tape, mark at least 6 in. of the conductor's insulation with half laps of tape.

2. Provide a solid copper 6 AWG grounding electrode conductor to bond the electrical service equipment to the concrete encased grounding electrode or the ground rod at the service location. Connect the grounding electrode conductor to the ground rod with a UL listed connector in accordance with DMS 11040. Connect the grounding electrode conductor to the concrete encased grounding electrode as shown in the plans.

3. Where two or more circuits are present in one conduit or enclosure, permanently identify the conductors of each branch circuit by attaching a non-metallic tag around both circuit conductors at each accessible location. Provide tags with two straps, large enough to indicate circuit number, letter, or other identification as shown in the plans. Print circuit identification on the tag with a permanent marker.

4. Use listed compression or screw type pressure connectors, terminal blocks, or split bolt connectors for splicing as specified in DMS 11040. Use hot melt adhesive tape to fill the gap and seal the ends of heat shrink tubing. Provide UL listed gel-filled insulating splice covers. Splicing materials, insulating materials, breakaway disconnects, splice covers, and fuse holders are subsidiary to various bid items.

B. CONSTRUCTION METHODS

1. Use only a flat, high tensile strength polyester fiber pull tape for pulling conductors through the conduit system. After installing conductors in conduit, perform conductor pull test. If a conductor cannot be freely pulled, make any needed alterations or repairs at no additional cost to the department. Perform insulation resistance tests in accordance with Item 620. Coordinate with the Engineer to witness the tests.

2. Leave 2 ft. minimum, 3 ft. maximum length for each conductor up to the splice in ground boxes. Leave 3 ft. minimum, 4 ft. maximum length of conductor in ground boxes when pulled through with no splice. Leave 1 ft. minimum, 1.5 ft. maximum length of conductor at enclosures, weatherheads and pole bases.

3. Make splices only in junction boxes, ground boxes, pole bases, or electrical enclosures and use only listed compression or screw type pressure connectors, terminal blocks, or split bolt connectors. Insulate splices with heavy wall heat shrink tubing or gel-filled insulating splice covers to provide a watertight splice. Overlap conductor insulation with heat shrink tubing a minimum of 2 in. past both sides of the splice. Where heat shrink tubing may not shrink sufficiently to provide a watertight seal around the individual conductors, prior to heating the tubing, increase the diameter of the conductor insulation using hot melt adhesive tape to provide a watertight seal between the individual conductors and the heat shrink tubing. Ensure the tape extends past the heat shrink tubing. Use hot melt adhesive tape to fill the gap and seal the ends of heat shrink tubing. Heat shrink tubing that appears to have been burned, or overheated, is considered defective and must be replaced.

4. Size and install gel-filled insulating splice covers according to manufacturer's specifications when used in place of heat shrink tubing.

5. Wire nuts with factory applied waterproof sealant may be used for 8 AWG or smaller conductors in above ground junction boxes, but not in pole bases or ground boxes. Install wire nuts in an upright position to prevent the accumulation of water.

6. Support conductors in illumination poles with a J-hook at the top of the pole.

7. When terminating conductors, remove the insulation and jacketing material without nicking the individual strands of the conductor. Conductors with nicked individual conductor strands or removed strands will be considered damaged.

8. Replace conductors and cables that are damaged beyond repair or that fail an insulation resistance test at no additional cost to the department.

9. Do not repair damaged conductors with duct tape, electrical tape, or wire nuts. Use only approved splicing methods.

10. Do not terminate more than one conductor under a single connector, unless the connector is rated for multiple conductors. Do not exceed the pressure connector's listing for maximum number and size of conductors allowed.

11. Install breakaway connectors on conductors bid under Item 620 whenever those conductors pass through a breakaway support device. Follow manufacturer's instructions when terminating conductors to breakaway connectors. Properly torque threaded connections. Proper terminations are critical to the safe operation of breakaway devices. Trim waterproofing boots on breakaway connectors to fit snugly around the conductor to ensure waterproof connection. Only one conductor may enter a single opening in a boot. Provide waterproof boots with the correct number of openings. Leave unused openings factory sealed. Use prequalified breakaway connectors as shown on the MPL.

12. Provide and install a separate stranded equipment grounding conductor (EGC) in all conduits that contain circuit wiring of 50 volts or more. Unless shown elsewhere, size the EGC to be the same size as the largest current carrying conductor contained in the conduit. Ensure all EGCs are bonded together at every accessible location. For traffic signal installations, provide a minimum size 8 AWG EGC. The EGC is paid for under Item 620.

C. TEMPORARY WIRING

1. Install temporary conductors and electrical equipment in accordance with the NEC article "Temporary Installations" and Department standard sheets.

2. Provide a ground fault circuit interrupter (GFCI) for power outlets for portable electrical equipment, power tools, ice machines, ice storage bins and refrigerators located outdoors at grade. GFCI may be any one of the following: molded cord and plug set, receptacle, or circuit breaker type.

3. Use listed wire nuts with factory applied sealant for temporary wiring where approved.

4. Enclose conductor splices within a listed enclosure or ground box, or ensure the splices are more than 10 ft. above grade vertically and more than 5 ft. horizontally from any metal structure. Where installing temporary conductors in areas subject to vehicle traffic or mobile construction equipment, ensure the vertical clearance to ground is at least 18 ft. when measured at the lowest point. Ground messenger wires that support power conductors in conformance with the NEC.

5. Protect and when necessary repair any existing electrical conduits uncovered during the construction process in a timely manner and in conformance with the NEC.

GROUND RODS & GROUNDING ELECTRODES

A. MATERIAL INFORMATION

1. Provide and install a grounding electrode at electrical services. Provide ground rods according to DMS 11040 and the plans. Larger diameter or longer length rods may be called for in some specific locations, see the individual plans sheets. Concrete encased grounding electrodes may be called for in specific locations including electrical service, see individual plan sheets.

B. CONSTRUCTION METHODS

1. Furnish auxiliary ground rods for lightning protection and install in soil, concrete, or both, as called for in the plans. For ground rods installed in concrete, ensure the connection of the conductor to the ground rod is readily accessible for inspection or repairs. For ground rods installed in soil, ensure that the upper end is between 2 to 4 in. below finished grade.

2. Do not place ground rods in the same drilled hole as a timber pole.

3. Install ground rods so the imprinted part number is at the upper end of the rod.

4. Remove all non-conductive coatings such as concrete splatter from the rod at the clamp location.

5. Route all conductors as short and straight as possible for connection to lightning protection ground rods. When a bend is required, ensure a minimum radius bend of four inches for these conductors.

6. Unless otherwise called for in the plans, protect grounding electrode conductors with non-metallic conduit. When protecting grounding electrode conductors with metal conduit, provide and install a grounding type bushing and properly sized bonding jumper on each end of the metal conduit.

7. Written authorization is required before installing a ground rod in a horizontal trench for rocky soil or a solid rock bottom.

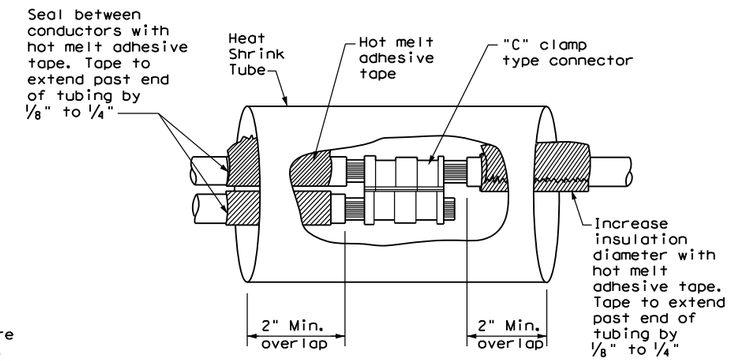

SPLICE OPTION 1
Compression Type

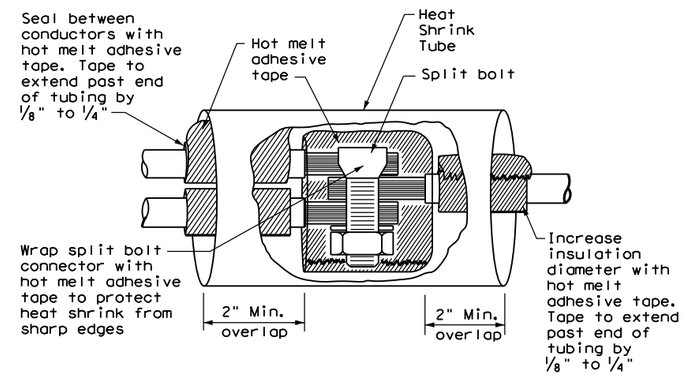

SPLICE OPTION 2
Split Bolt Type

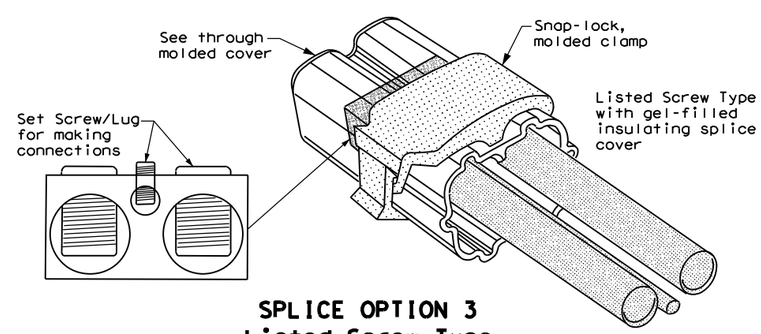

SPLICE OPTION 3
Listed Screw Type

Texas Department of Transportation — Traffic Operations Division Standard

ELECTRICAL DETAILS CONDUCTORS

ED(3)-14

FILE: ed3-14.dgn	DN: TxDOT	CK: TxDOT	DW: TxDOT	CK: TxDOT	
©TxDOT October 2014	CONT	SECT	JOB	HIGHWAY	
REVISIONS	0922	33	076	CS	
	DIST		COUNTY		SHEET NO.
	LRD		WEBB		135

71C

DATE:
FILE:

DISCLAIMER:
The use of this standard is governed by the "Texas Engineering Practice Act". No warranty of any kind is made by TxDOT for any purpose whatsoever. TxDOT assumes no responsibility for the conversion of this standard to other formats or for incorrect results or damages resulting from its use.

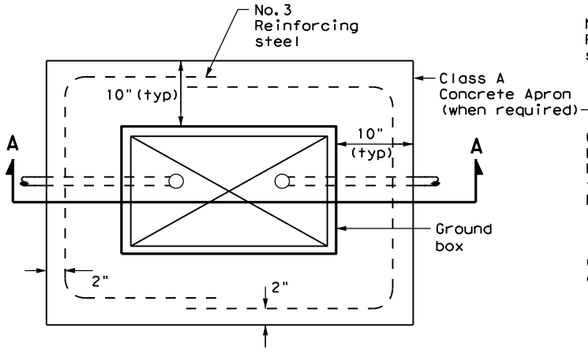

PLAN VIEW

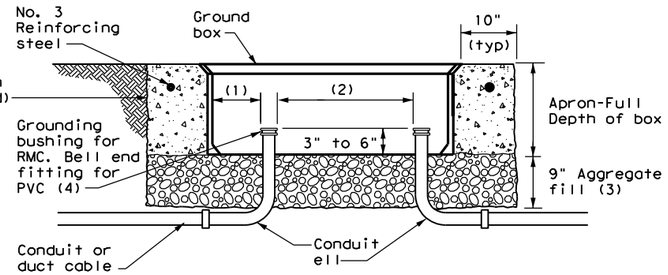

SECTION A - A

APRON FOR GROUND BOX

(1) Uniformly space ends of conduits within the ground box. Position ends of conduits so that ground box walls do not interfere with the installation of grounding bushings or bell end fittings.

(2) Maintain sufficient space between conduits to allow for proper installation of bushing.

(3) Place aggregate under the box, not in the box. Aggregate should not encroach on the interior volume of the box.

(4) Install a grounding bushing on the upper end of all RMC terminating in a ground box. Ground RMC elbows when any part of the elbow is less than 18 in. below the bottom of the ground box. Install a PVC bushing or bell end fitting on the upper end of all PVC conduits terminating in a ground box.

GROUND BOXES

A. MATERIALS

1. Provide polymer concrete ground boxes measuring 16x30x24 in. (WxLxD) or smaller in accordance with Departmental Material Specification (DMS) 11070 "Ground Boxes" and Item 624 "Ground Boxes."

2. Provide Type A, B, C, D, and E ground boxes as shown in the plans, and as listed on the Material Producers List (MPL) on the Department web site under "Roadway Illumination and Electrical Supplies," Item 624.

3. Ensure ground box cover is correctly labeled in accordance with DMS 11070.

4. Provide larger ground boxes in accordance with Item 624 and as shown in the plans.

B. CONSTRUCTION METHODS

1. Remove all gravel and dirt from conduit. Cap all conduits prior to placing aggregate and setting ground box. Provide Grade 3 or 4 coarse aggregate as shown on Table 2 of Item 302 "Aggregates for Surface Treatments." Ensure aggregate bed is in place and at least 9 inches deep, prior to setting the ground box. Install ground box on top of aggregate.

2. Cast ground box aprons in place. Reinforcing steel may be field bent. Ensure the depth of concrete for the apron extends from finished grade to the top of the aggregate bed under the box. Ground box aprons, including concrete and reinforcing steel, are subsidiary to ground boxes when called for by descriptive code.

3. Keep bolt holes in the box clear of dirt. Bolt covers down when not working in ground boxes.

4. Install all conduits and ells in a neat and workmanlike manner. Uniformly space conduits so grounding bushings and bell end fittings can easily be installed.

5. Temporarily seal all conduits in the ground box until conductors are installed.

6. Permanently seal conduits immediately after the completion of conductor installation and pull tests. Permanently seal the ends of all conduits with duct seal, expandable foam, or other method as approved. Do not use duct tape as a permanent conduit sealant. Do not use silicone caulk as a sealant.

7. When a ground rod is present in a ground box, bond all equipment grounding conductors together and to the ground rod with listed connectors.

8. When a type B or D ground box is stacked to meet volume requirements, it is allowable to cut an appropriately sized hole for conduit entry in the side wall at least 18 inches below grade.

9. If an existing ground box in the contract has a metal cover, bond the cover to the equipment grounding conductor with a 3 ft. long stranded bonding jumper the same size as the grounding conductor. The bonding jumper is subsidiary to various bid items. Verify existing ground boxes with metal covers are shown on the plans, with notes fully describing the work required.

10. If other ground boxes with metal covers are within the project limits but are not part of the contract, the Engineer may direct the Contractor to bond the metal covers, identifying the specific boxes in writing. This work will be paid for separately.

11. Bond metal ground box covers to the grounding conductor with a tank ground type lug.

GROUND BOX DIMENSIONS

TYPE	OUTSIDE DIMENSIONS (INCHES) (Width x Length X Depth)
A	12 X 23 X 11
B	12 X 23 X 22
C	16 X 29 X 11
D	16 X 29 X 22
E	12 X 23 X 17

GROUND BOX COVER DIMENSIONS

TYPE	DIMENSIONS (INCHES)							
	H	I	J	K	L	M	N	P
A, B & E	23 1/4	23	13 3/4	13 1/2	9 7/8	5 1/8	1 3/8	2
C & D	30 1/2	30 1/4	17 1/2	17 1/4	13 1/4	6 3/4	1 3/8	2

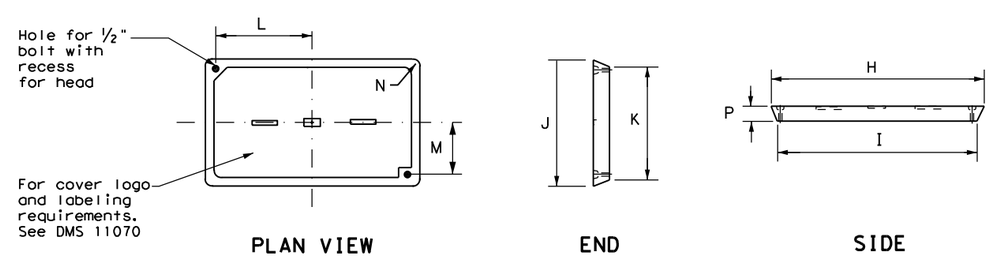

PLAN VIEW END SIDE

GROUND BOX COVER

Texas Department of Transportation

Traffic Operations Division Standard

ELECTRICAL DETAILS GROUND BOXES

ED(4)-14

FILE: ed4-14.dgn	DN: TxDOT	CK: TxDOT	DW: TxDOT	CK: TxDOT
© TxDOT October 2014	CONT	SECT	JOB	HIGHWAY
REVISIONS	0922	33	076	CS
	DIST		COUNTY	SHEET NO.
	LRD		WEBB	136

71D

DATE:
FILE:

DISCLAIMER:
The use of this standard is governed by the "Texas Engineering Practice Act". No warranty of any kind is made by TxDOT for any purpose whatsoever. TxDOT assumes no responsibility for the conversion of this standard to other formats or for incorrect results or damages resulting from its use.

ELECTRICAL SERVICES NOTES

1. Provide new materials. Ensure installation and materials comply with the applicable provisions of the National Electrical Code (NEC) and National Electrical Manufacturers Association (NEMA) standards. Ensure material is Underwriters Laboratories (UL) listed. Provide and install electrical service conduits, conductors, disconnects, contactors, circuit breaker panels, and branch circuit breakers as shown on the Electrical Service Data chart in the plans. Faulty fabrication or poor workmanship in material, equipment, or installation is justification for rejection. Where manufacturers provide warranties and guarantees as a customary trade practice, furnish these to the State.

2. Provide electrical services in accordance with Electrical Details standard sheets, Departmental Material Specification (DMS) 11080 "Electrical Services,"DMS 11081 "Electrical Services-Type A," DMS 11082 "Electrical Services-Type C," DMS 11083 "Electrical Services-Type D," DMS 11084 "Electrical Services-Type T," DMS 11085 "Electrical Services-Pedestal (PS)", and Item 628 "Electrical Services" of the Standard Specifications. Provide electrical service types A, C, and D, as listed on the Material Producers List (MPL) on the Department web site under "Roadway Illumination and Electrical Supplies," Item 628. Provide other service types as detailed on the plans.

3. Provide all work, materials, services, and any incidentals needed to install a complete electrical service as specified in the plans.

4. Coordinate with the Engineer and the utility provider for metering and compliance with utility requirements. Primary line extensions, connection charges, meter charges, and other charges by the utility company to provide power to the location are paid for in accordance with Item 628. Get approval for the costs associated with these charges prior to engaging the utility company to do the work. Consult with the utility provider to determine costs and requirements, and coordinate the work as approved.

5. The enclosure manufacturer will provide Master Lock Type 2 with brass tumblers keyed #2195 for all custom electrical enclosures. Installing Contractor is to provide Master Lock #2195 Type 2 with brass tumblers for "off the shelf" enclosures. Master Lock #2195 keys and locks become property of the State. Unless otherwise approved, do not energize electrical service equipment until locks are installed.

6. Enclosures with external disconnects that de-energize all equipment inside the enclosure do not need a dead front trim. Protect incoming line terminations from incidental contact as required by the NEC.

7. When galvanized is specified for nuts, screws, bolts or miscellaneous hardware, stainless steel may be used.

8. Provide wiring and electrical components rated for 75°C. Provide red, black, and white colored XHHW service entrance conductors of minimum size 6 American Wire Gauge (AWG). Identify size 6 AWG conductors by continuous color jacket. Identify electrical conductors sized 4 AWG and larger by continuous color jacket or by colored tape. Mark at least 6 inches of the conductor's insulation with half laps of colored tape, when identifying conductors. Ensure each service entrance conductor exits through a separately bushed non-metallic opening in the weatherhead. The lengths of the conductors outside the weatherhead are to be 12 inches minimum, 18 inches maximum, or as required by utility.

9. All electrical service conduit and conductors attached to the electrical service including the riser or the elbow below ground are subsidiary to the electrical service. For an underground utility feed, all service conduit and conductors after the elbow, including service conduit and conductors for the utility pole riser when furnished by the Contractor, will be paid for separately.

10. Provide rigid metal conduit (RMC) for all conduits on service, except for the ½ in. PVC conduit containing the electrical service grounding electrode conductor. Size the service entrance conduit as shown in the plans. Ensure conduit for branch circuit entry to enclosure is the same size as that shown on the layout sheets for branch circuit conduit. Extend all rigid metal conduits a minimum of 6 inches underground and then couple to the type and schedule of the conduit shown on the layout for that particular branch circuit. Install a grounding bushing on the RMC where it terminates in the service enclosure.

11. Use of liquidtight flexible metal conduit (LFMC) is allowed between the meter and service enclosure when they are mounted 90 to 180 degrees to each other. Size the LFMC the same size as service entrance conduit. LFMC must not exceed 3 feet in length. Strap LFMC within 1 foot of each end. LFMC less than 12 inches in length need not be strapped. Each end of LFMC must have a grounding bushing or be terminated with a grounding fitting. The LFMC must contain a grounded (neutral) conductor. Ensure any bend in LFMC never exceeds 180 degrees. A pull test is required on all installed conductors, with at least six inches of free conductor movement demonstrated to the satisfaction of the Engineer.

12. Ensure all mounting hardware and installation details of services conform to utility company specifications.

13. For all electrical service enclosures listed under Item 628 on the MPL, the UL 508 enclosure manufacturers will prepare and submit a schematic drawing unique to each service. Before shipment to the job site, place the applicable laminated schematic drawings and the laminated plan sheet showing the electrical service data chart used to build the enclosure in the enclosure's data pocket. The installing contractor will copy and laminate the actual project plan sheets detailing all equipment and branch circuits supplied by that service. The laminated plan sheets are to be placed in the service enclosure's document pocket. Reduce 11 in. x 17 in. plan sheets to 8 ½ in. x 11 in. before laminating. If the installation differs from the plan sheets, the installing contractor is to redline plan sheets before laminating.

14. When providing an "Off The Shelf" Type D or Type T service, provide laminated plan sheets detailing equipment and branch circuits supplied by that service. Reduce 11 in. x 17 in. plan sheets to 8 ½ in. x 11 in before laminating. Deliver these drawings before completion of the work to the Engineer, instead of placing in enclosure that has no door pocket.

15. Do not install conduit in the back wall of a service enclosure where it would penetrate the equipment mounting panel inside the enclosure. Provide grounding bushings on all metal conduits, and terminate bonding jumpers to grounding bus. Grounding bushings are not required when the end of the metal conduit is fitted with a conduit sealing hub or threaded boss, such as a meter base hub.

SERVICE ASSEMBLY ENCLOSURE

1. Provide threaded hub for all conduit entries into the top of enclosure.

2. Type galvanized steel (GS) enclosures may be used for Type C panelboards and for Type D and T services that do not use an enclosure mounted photocell or lighting contactor. Provide GS enclosures in accordance with DMS 11080, 11082, 11083, and 11084.

3. Provide aluminum (AL) and stainless steel (SS) enclosures for Types A, C, and D in accordance with DMS 11080, 11081, 11082, 11083, and 11084. Do not paint stainless steel.

4. Provide pedestal service (PS) enclosures in accordance with ED(9) and DMS 11080 and 11085. Do not provide GS pedestal services. If GS is shown in the PS descriptive code, provide an AL enclosure.

MAIN DISCONNECT & BRANCH CIRCUIT BREAKERS

1. Field drill flange-mounted remote operator handle if needed, to ensure handle is lockable in both the "On" and "Off" positions.

2. When the utility company provides a transformer larger than 50 KVA, verify that the available fault current is less than the circuit breaker's ampere interrupting capacity (AIC) rating and provide documentation from the electric utility provider to the Engineer.

PHOTOELECTRIC CONTROL

1. Provide photocell as listed on the MPL. Move, adjust, or shield the photocell from stray or ambient night time light to ensure proper operation. Mount photocell facing north when practical. Mount top of pole photocells as shown on Top Mounted Photocell Detail.

* ELECTRICAL SERVICE DATA

Elec. Service ID	Plan Sheet Number	Electrical Service Description	Service Conduit **Size	Service Conductors No./Size	Safety Switch Amps	Main Ckt. Bkr. Pole/Amps	Two-Pole Contractor Amps	Panelbd/ Loadcenter Amp Rating	Branch Circuit ID	Branch Ckt. Bkr. Pole/Amps	Branch Circuit Amps	KVA Load
SB 183	289	ELC SRV TY A 240/480 100(SS)AL(E)SF(U)	2"	3/#2	100	2P/100	100	N/A	Lighting NB	2P/40	26	28.1
									Lighting SB	2P/40	25	
									Underpass	1P/20	15	
NB Access	30	ELC SRV TY D 120/240 060(NS)SS(E)TS(O)	1 ¼"	3/#6	N/A	2P/60		100	Sig. Controller	1P/30	23	5.3
							30		Luminaires	2P/20	9	
									CCTV	1P/20	3	
2nd & Main	58	ELC SRV TY T 120/240 000(NS)GS(N)SP(O)	1 ¼"	3/#6	N/A	N/A	N/A	70	Flashing Beacon 1	1P/20	4	1.0
									Flashing Beacon 2	1P/20	4	

* Example only, not for construction. All new electrical services must have electrical service data chart specific to that service as shown in the plans.

** Verify service conduit size with utility. Size may change due to utility meter requirements. Ensure conduit size meets the National ELectrical Code.

EXPLANATION OF ELECTRICAL SERVICE DESCRIPTIVE CODE

ELEC SERV TY X XXX/XXX XXX (XX) XX (X) XX (X)

Schematic Type

Service Voltage V / V

Disconnect Amp Rating
000 indicates main lug only/
Typically Type T

(SS)= Safety Switch Ahead of Meter-Check with Utility
(NS)= No safety Switch Ahead of Meter-Check with Utility

Enclosure Type
GS= Galvanized steel("off the shelf")
SS= Stainless steel(Custom Enclosure)See MPL
AL= Aluminum (Custom Enclosure)See MPL

Photocell Mounting Location
(E)= Inside Service/Enclosure Mounted
(T)= Top of pole
(L)= Luminaire mounted
(N)= None/No Photocell or Lighting Contactor Required

Service Support Type
GC= Granite concrete
OC= Other concrete
TP= Timber pole
SP= Steel pole
SF= Steel frame
OT= Pole by others or paid for separately
EX= Existing pole
TS= Service on traffic signal pole
PS= Pedestal Service

O= Overhead Service Feed from Utility
U= Underground Service Feed from Utility

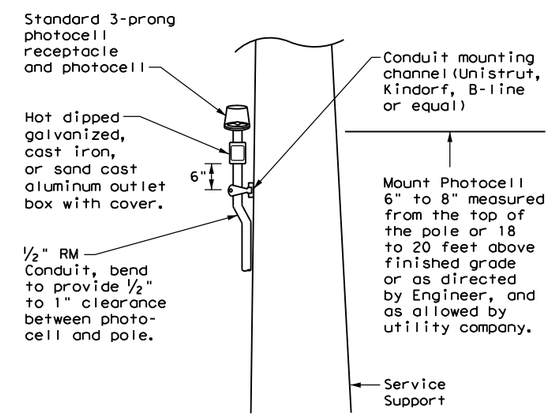

TOP MOUNTED PHOTOCELL

Install conduit strap maximum 3 feet from box. 5 foot maximum spacing between straps supporting conduit.

Texas Department of Transportation — Traffic Operations Division Standard

ELECTRICAL DETAILS SERVICE NOTES & DATA

ED(5)-14

FILE: ed5-14.dgn	DN: TxDOT	CK: TxDOT	DW: TxDOT	CK: TxDOT
©TxDOT October 2014	CONT	SECT	JOB	HIGHWAY
REVISIONS	0922	33	076	CS
	DIST		COUNTY	SHEET NO.
	LRD		WEBB	137

DATE:
FILE:

71E

DISCLAIMER:
The use of this standard is governed by the "Texas Engineering Practice Act". No warranty of any kind is made by TxDOT for any purpose whatsoever. TxDOT assumes no responsibility for the conversion of this standard to other formats or for incorrect results or damages resulting from its use.

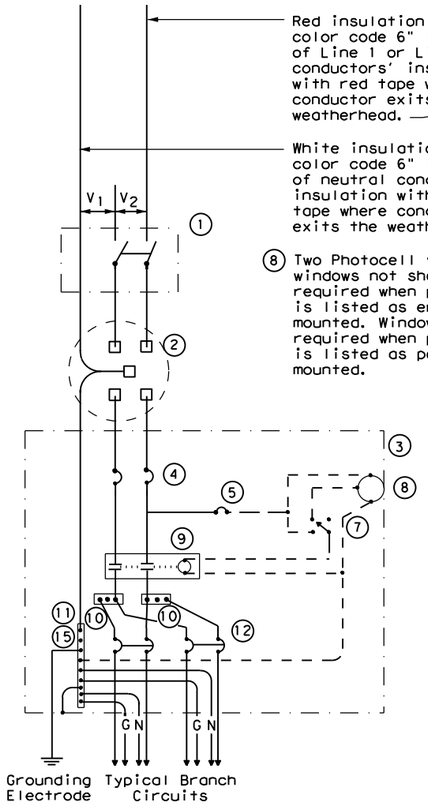

SCHEMATIC TYPE A
THREE WIRE

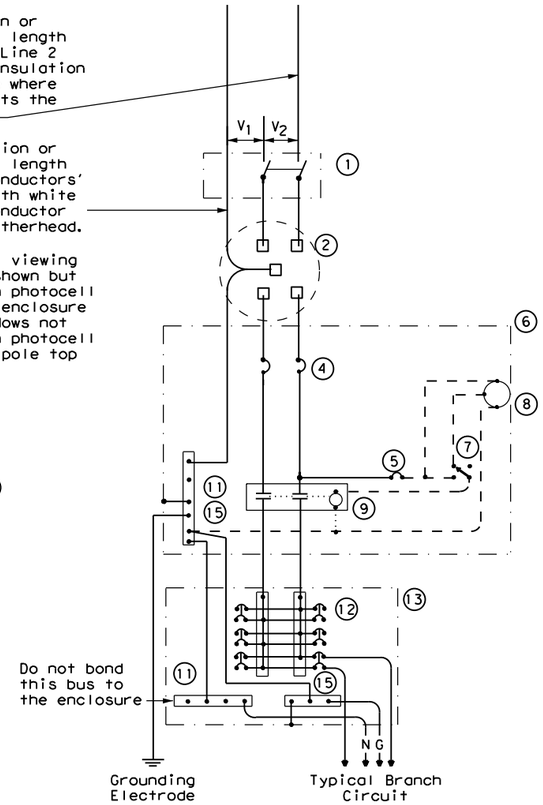

SCHEMATIC TYPE C
THREE WIRE

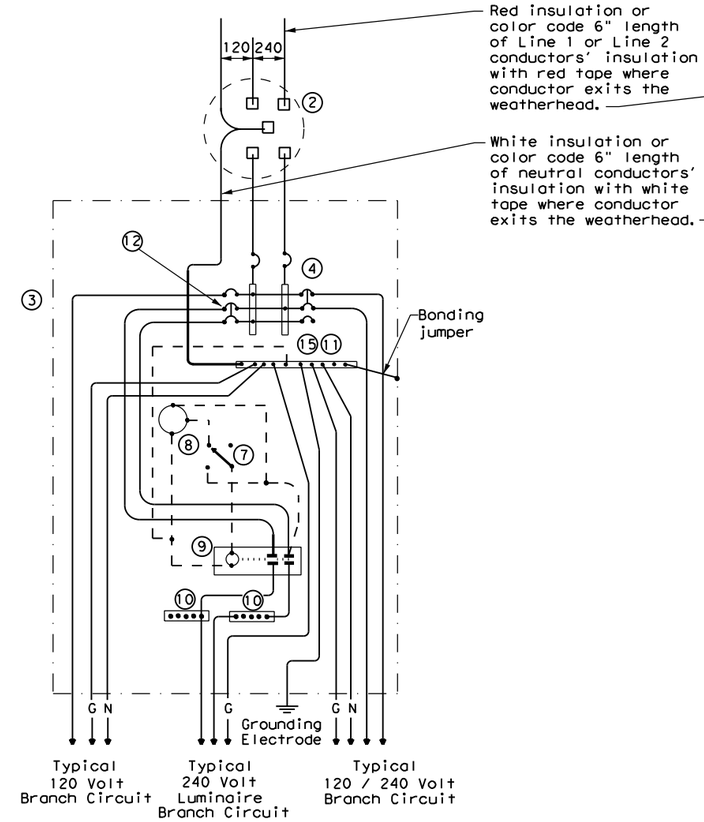

SCHEMATIC TYPE D - CUSTOM
120/240 VOLTS - THREE WIRE

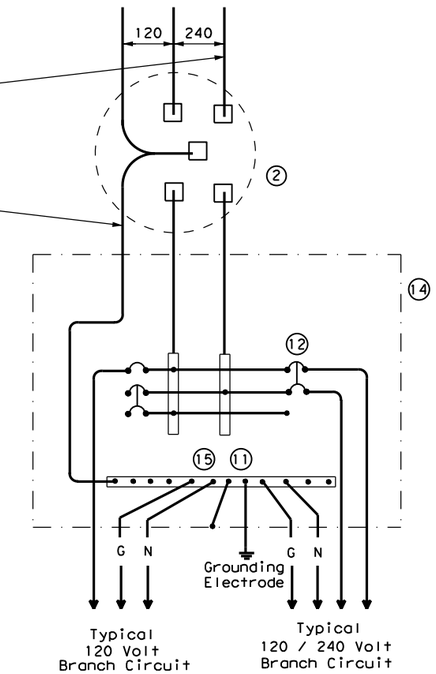

SCHEMATIC TYPE T
120/240 VOLTS - THREE WIRE

Galvanized steel-"Buy Off The Shelf" only. When required install photocell top of the pole or on luminaire only, no lighting contractor will be installed.

WIRING LEGEND

———	Power Wiring
- - - -	Control Wiring
—N—	Neutral Conductor
—G—	Equipment grounding conductor-always required

SCHEMATIC LEGEND

1	Safety Switch (when required)
2	Meter (when required-verify with electric utility provider)
3	Service Assembly Enclosure
4	Main Disconnect Breaker (See Electrical Service Data)
5	Circuit Breaker, 15 Amp (Control Circuit)
6	Auxiliary Enclosure
7	Control Station ("H-O-A" Switch)
8	Photo Electric Control (enclosure-mounted shown)
9	Lighting Contactor
10	Power Distribution Terminal Blocks
11	Neutral Bus
12	Branch Circuit Breaker (See Electrical Service Data)
13	Separate Circuit Breaker Panelboard
14	Load Center
15	Ground Bus

Texas Department of Transportation

Traffic Operations Division Standard

ELECTRICAL DETAILS SERVICE ENCLOSURE AND NOTES

ED(6)-14

FILE: ed6-14.dgn	DN: TxDOT	CK: TxDOT	DW: TxDOT	CK: TxDOT			
©TxDOT October 2014	CONT	SECT	JOB	HIGHWAY			
REVISIONS	0922	33	076	CS			
	DIST	COUNTY		SHEET NO.			
	LRD	WEBB		138			

71F

DATE:
FILE:

SUPPORT TYPE STEEL POLE (SP) AND STEEL FRAME (SF)

1. Provide steel pole and steel frame supports as per TxDOT Departmental Material Specification (DMS)11080 "Electrical Services." Mount all equipment and conduit on 12 gauge galvanized steel or stainless steel channel strut, 1 ½ in. or 1 ⅝ in. wide by 1 in. up to 3 ¾ in. deep Unistrut, Kindorf, B-line or equal. Bolt or weld all channel and hardware to vertical members as approved. Do not stack channel. File smooth and paint field cut ends of all channel with zinc-rich paint before installing.

2. Provide poles for overhead service with an eyebolt or similar fitting for attachment of the service drop to the pole in conformance with the electric utility provider's specifications.

3. Provide and install galvanized ¾ in. x 18 in. x 4 in. (dia. x length x hook length) anchor bolts for underground service supports. Provide and install galvanized ¾ in. x 56 in. x 4 in. anchor bolts for overhead service supports. Ensure anchor bolts have 3 in of thread, with 3 ¼ in. to 3 ½ in. of the exposed anchor bolt projecting above finished foundation. Provide and install leveling nuts for all anchor bolts.

4. Bond one of the anchor bolts to the rebar cage with 6 AWG bare stranded copper conductor. Use listed mechanical connectors rated for embedment in concrete. See Inset B.

5. Furnish and install rigid metallic ells in all steel pole and steel frame foundations for all conduits entering the service from underground.

6. Use class C concrete for foundations. Ensure reinforcing steel is Grade 60 with 3" of unobstructed concrete cover.

7. Drill and tap steel poles and frames for ½ in. X 13 UNC tank ground fitting. For steel pole service supports, provide and install tank ground fitting 4 in. to 6 in. below electrical service enclosure. Provide properly sized hole through the bottom of the enclosure for the service grounding electrode conductor. Ensure electrical service grounding electrode conductor is as short and straight as possible from the enclosure to the tank ground fitting. For steel frame service supports, provide and install tank ground fitting on steel frame post. Install service grounding electrode conductor in a non-metallic conduit or tubing from the enclosure to the steel frame post. Connect electrical service grounding electrode conductor to the tank ground fitting. See steel frame and steel pole details and Inset A for more information. Size service entrance conduit and branch circuit conduit as shown in the plans. For underground conduit runs from the electrical service, extend RMC from the service enclosure to an RMC elbow, and then connect the schedule type and size of conduit shown in the plans. Provide and install grounding bushings where RMC terminates in the enclosure. Grounding bushings are not required when RMC is fitted into a sealing hub or threaded boss.

8. If Steel pole or frame is painted, bond each separate painted piece with a bonding jumper attached to a tapped hole.

9. Provide ¼" - 20 machine screws for bonding. Do not use sheet metal screws. Remove all non-conductive material at contact points. Terminate bonding jumpers with listed devices. Install minimum size 6 AWG stranded copper bonding jumpers. Make up all threaded bonding connections wrench tight.

10. Avoid contact of the service drop and service entrance conductors with the metal pole to prevent abrasion of the insulated conductors.

11. Shop drawings are not required for service support structure unless specifically stated elsewhere or directed by the Engineer.

DISCLAIMER:
The use of this standard is governed by the "Texas Engineering Practice Act". No warranty of any kind is made by TxDOT for any purpose whatsoever. TxDOT assumes no responsibility for the conversion of this standard to other formats or for incorrect results or damages resulting from its use.

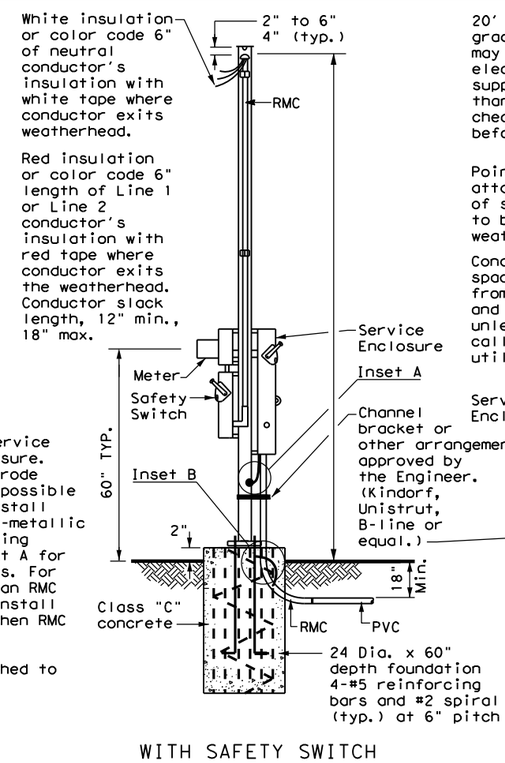

WITH SAFETY SWITCH

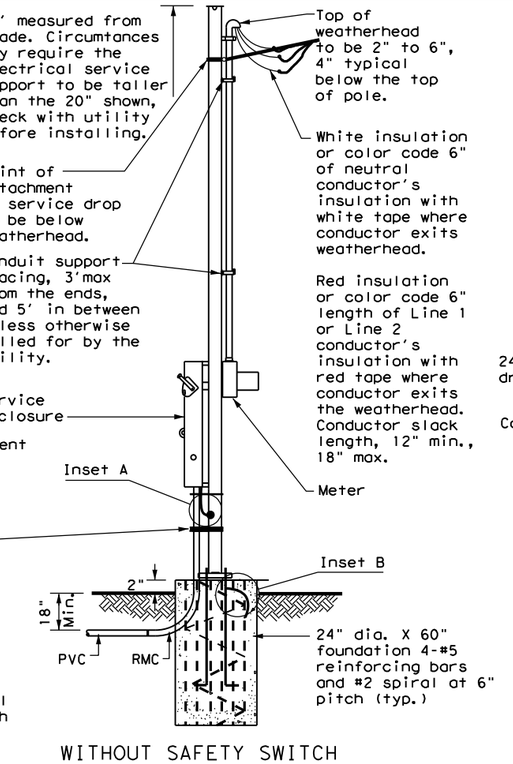

WITHOUT SAFETY SWITCH

SERVICE SUPPORT TYPE SP (O) - OVERHEAD SERVICE

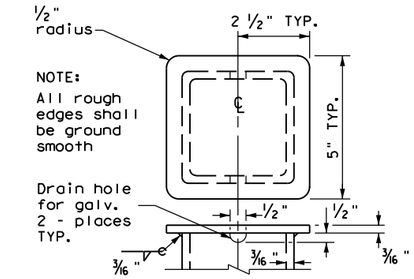

POLE TOP PLATE

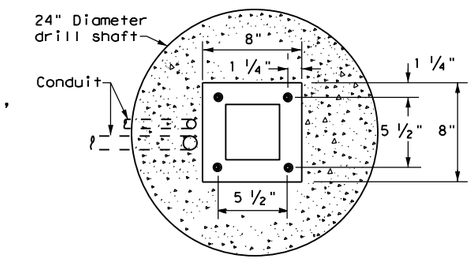

BASE PLATE DETAIL

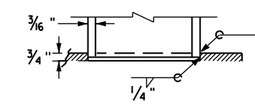

BOTTOM OF POLE

SERVICE SUPPORT TYPE SF & SP

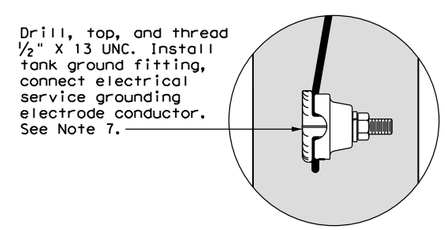

FRONT VIEW

INSET A

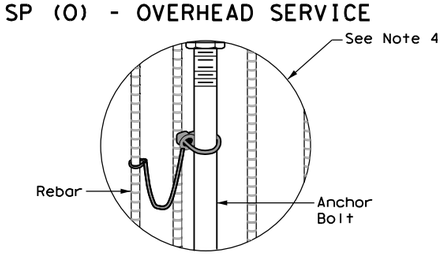

INSET B

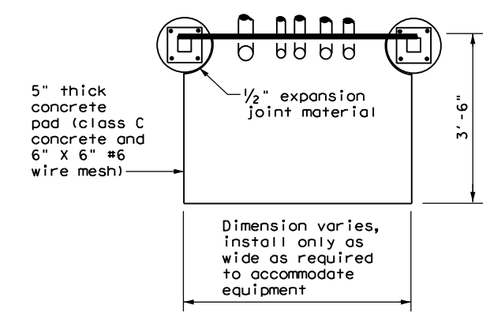

TOP VIEW

SERVICE SUPPORT TY SF (O) & SF (U)

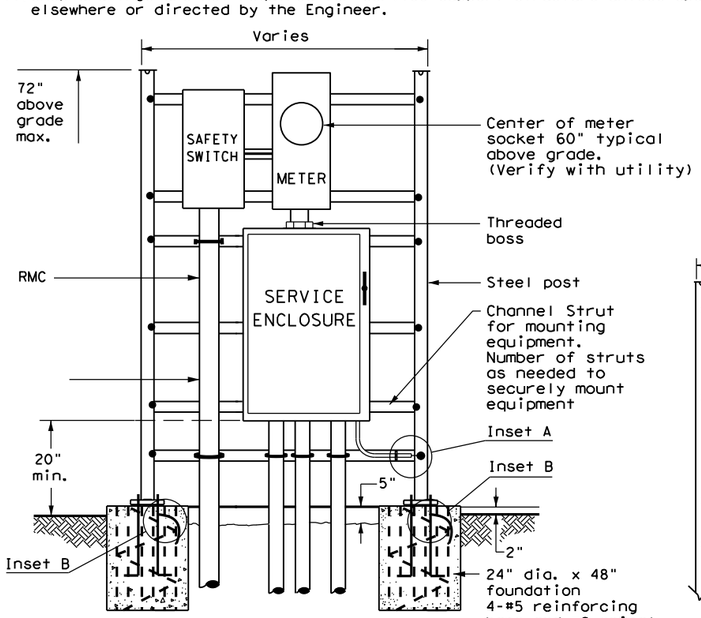

WITH SAFETY SWITCH

FRONT VIEW

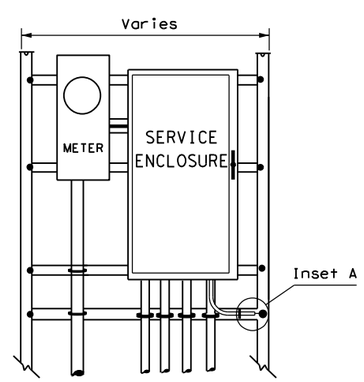

WITHOUT SAFETY SWITCH

SERVICE SUPPORT TYPE SF(U) - UNDERGROUND SERVICE

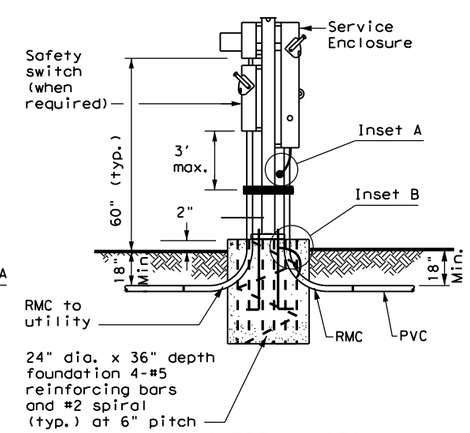

WITH SAFETY SWITCH

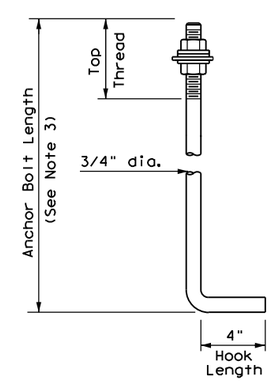

HOOKED ANCHOR DETAIL

SERVICE SUPPORT TYPE SP(U) - UNDERGROUND SERVICE

Texas Department of Transportation

Traffic Operations Division Standard

ELECTRICAL DETAILS SERVICE SUPPORT TYPES SF & SP

ED(7)-14

FILE: ed7-14.dgn	DN: TxDOT	CK: TxDOT	DW: TxDOT	CK: TxDOT
©TxDOT October 2014	CONT	SECT	JOB	HIGHWAY
REVISIONS	0922	33	076	CS
	DIST		COUNTY	SHEET NO.
	LRD		WEBB	139

DATE:
FILE:

71G

TRAFFIC SIGNAL NOTES

1. Do not pass luminaire conductors through the signal controller cabinet.
2. Include an equipment grounding conductor in all conduits throughout the electrical system. Bond all exposed metal parts to the grounding conductor.
3. Provide roadway luminaires, when required, in accordance with the material and construction sections of Item 610, "Roadway Illumination Assemblies," except for performance testing of luminaires. Test installed roadway luminaires for proper operation as a part of the associated traffic signal system test.
4. If internally illuminated street name signs are approved for use, ground the fixture to the pole with a 12 AWG green XHHW conductor.
5. Bond anchor bolts to rebar cage in two locations using #3 bars or 6 AWG stranded copper conductors. Use listed mechanical connectors rated for embedment in concrete. See TXDOT standard TS-FD for further details.
6. Drill and tap signal poles for ½ in. X 13 UNC tank ground fitting. Provide and install tank ground fitting 4 in. to 6 in. directly below electrical service enclosure. Provide properly sized hole through the bottom of the enclosure for the service grounding electrode conductor. Connect the electrical service grounding electrode conductor to the tank ground fitting. Ensure electrical service grounding electrode conductor is as short and straight as possible from the enclosure to the tank ground fitting. See Inset A detail for further information. Size service entrance conduit and branch circuit conduit as shown in the plans.
7. Mount electrical service enclosure and meter to signal pole with stainless steel bands. Ensure bands are a minimum width of ¾ in. Secure enclosures to bands using two-bolt brackets. Install brackets near top and bottom of each enclosure. Install properly sized stainless steel washers on each bolt in the enclosure. Band or drill and tap properly sized stand-off straps to signal pole for attaching conduit.
8. Conduct pull tests and insulation resistance tests on all illumination and power conductors as required in Item 620 "Electrical Conductors" and ED(3). To prevent electronics damage, do not conduct insulation resistance tests on traffic signal cables after termination.
9. Lock all enclosures and bolt down all ground box covers before applying power to the signal installation.
10. Terminate conduits entering the top of enclosures with a conduit-sealing hub or threaded boss such as meter hub. Install a grounding bushing on all metal conduits not connected to conduit-sealing hub or threaded boss. Bond the grounding bushing to the ground bus with a bonding jumper. Seal all conduits entering enclosures with duct seal or expanding foam. Do not use silicone to seal conduit ends.
11. For all conduits, ensure the burial depth is a minimum of 18". Ensure the minimum burial depth for conduit placed under a roadway is 24".

DISCLAIMER:
The use of this standard is governed by the "Texas Engineering Practice Act". No warranty of any kind is made by TxDOT for any purpose whatsoever. TxDOT assumes no responsibility for the conversion of this standard to other formats or for incorrect results or damages resulting from its use.

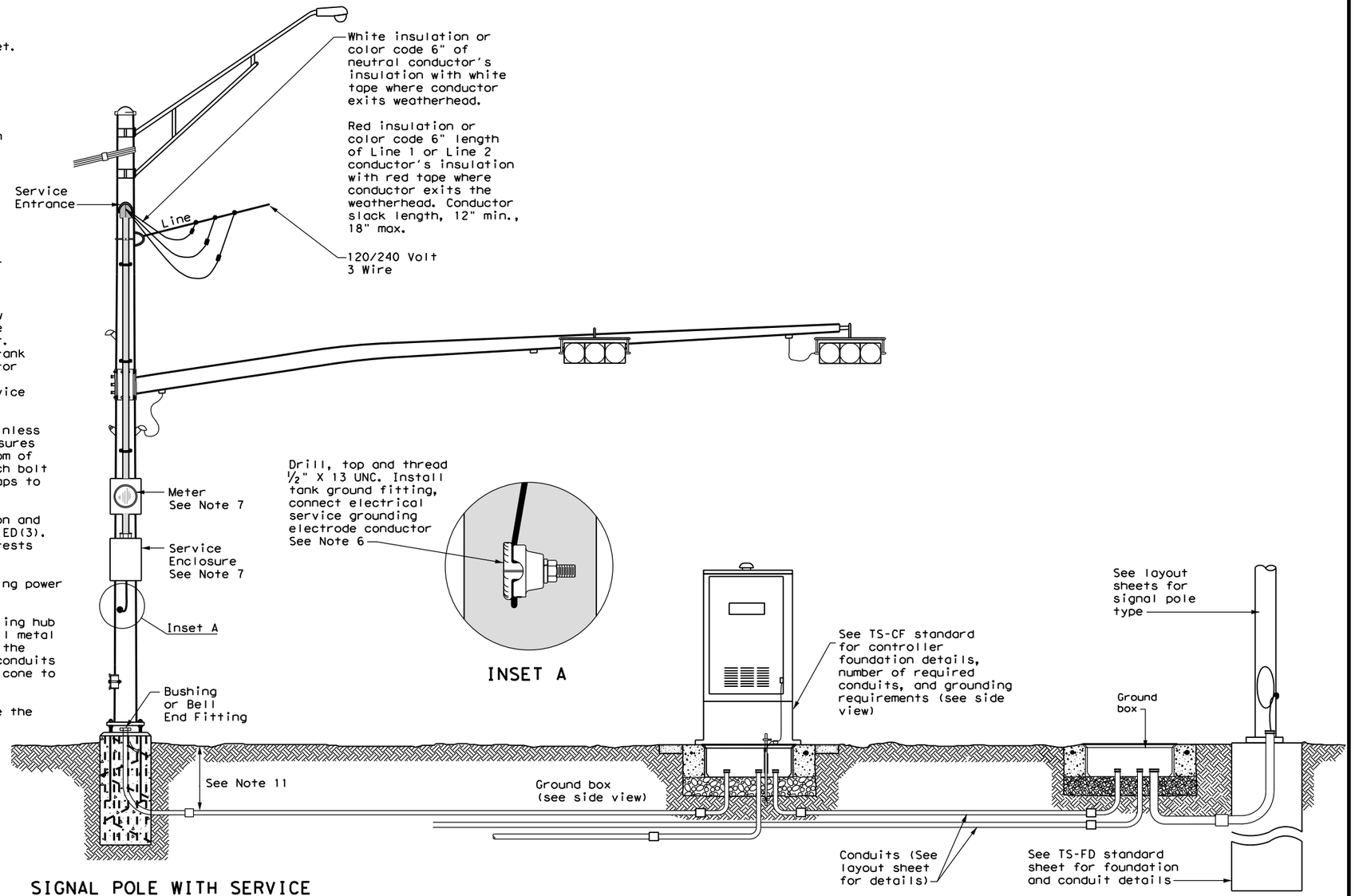

SIGNAL POLE WITH SERVICE

Type T electrical service mounted on signal pole shown as an example. See electrical details, layout sheets, and electrical service data chart for additional details.

SIGNAL CONTROLLER FRONT VIEW

SIGNAL POLE

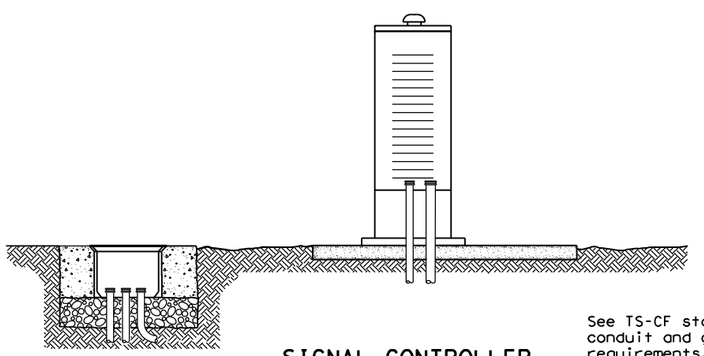

SIGNAL CONTROLLER SIDE VIEW

See TS-CF standard for conduit and grounding requirements. See layout sheets for ground box locations and any additional conduits that are required.

Texas Department of Transportation

Traffic Operations Division Standard

ELECTRICAL DETAILS TYPICAL TRAFFIC SIGNAL SYSTEM DETAILS

ED(8)-14

FILE: ed8-14.dgn	DN: TxDOT	CK: TxDOT	DW: TxDOT	CK: TxDOT
©TxDOT October 2014	CONT	SECT	JOB	HIGHWAY
REVISIONS	0922	33	076	CS
	DIST	COUNTY		SHEET NO.
	LRD	WEBB		140

71H

DATE:
FILE:

PEDESTAL SERVICE NOTES

1. Manufacture pedestal electrical services in accordance with Departmental Material Specifications (DMS)11080 "Electrical Services", 11085 "Electrical Services-Pedestal (PS)" and Item 628 "Electrical Services. "Provide pedestal electrical services as listed on the Material Producers list (MPL) on the Department's web site under "Roadway Illumination and Electrical Supplies," Item 628. Ensure all mounting hardware and installation details of services meet utility company specifications. Contact the local utility company for approval of pedestal details prior to installing the electrical pedestal service. Submit any changes required by the utility company prior to manufacturing the pedestal enclosure.

2. When a meter socket is required, provide a socket with a minimum 100 amp rating that complies with local utility requirements.

3. Provide Class A or C concrete for pedestal service foundations in accordance with Item 420, "Concrete Substructures," except that concrete will not be paid for directly but is considered subsidiary to Item 628.

4. Provide #4 reinforcing steel for foundations in accordance with Item 440, "Reinforcement for Concrete."

5. Install ½ in. X 2 1/16 in. minimum length concrete single expansion type anchors for mounting pedestal enclosure to foundation. Anchor location to match mounting holes in each corner of enclosure. Secure each of the four corners of the pedestal enclosure to the anchors in the foundation with a ½ in. galvanized or stainless steel machine thread bolt, a properly sized locknut and a flat washer.

6. Finish top of concrete foundation in a neat and workmanlike manner. If leveling washers are used, ensure no more than ⅛ in. gap at any corner. Do not exceed a maximum dip or rise in the foundation of ⅛ in. per foot. When properly installed, ensure the top of the service enclosure is level front to back and side to side within ¼ in. Repair rocking or movement of the service enclosure at no additional cost to the department.

7. Do not use liquidtight flexible metal conduit (LFMC) on pedestal type services.

8. Ensure all elbows in the foundation are sized as per utility provider's conduit requirements for underground conduit and feeders. PVC extensions may be installed provided the ends of the rigid metal conduits are more than 2 in. below the top of the concrete foundation. Where extension conduits are metal, grounding bushings must be installed with a bonding jumper properly terminated.

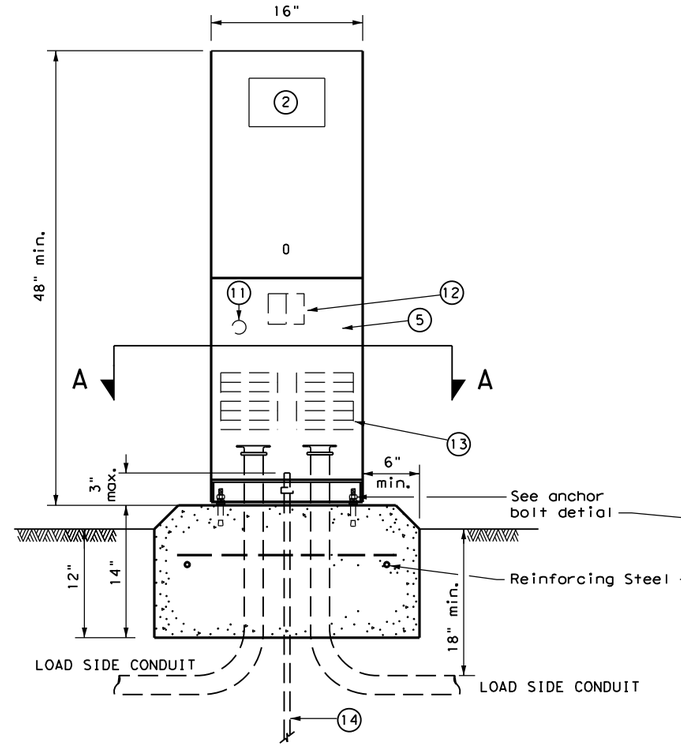

FRONT VIEW

TYPE C shown, TYPE A similar except that TYPE A shall have individual circuit breakers (CB) mounted on an equipment mounting panel. CB Handles shall protrude through hinged deadfront trim.

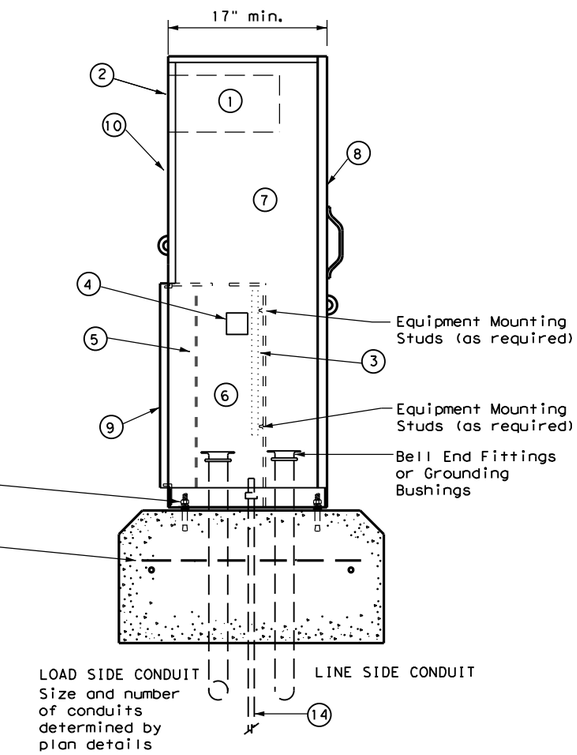

SIDE VIEW

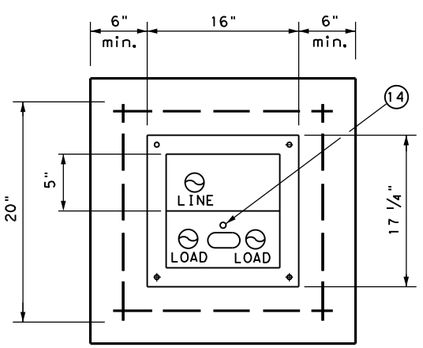

SECTION A-A

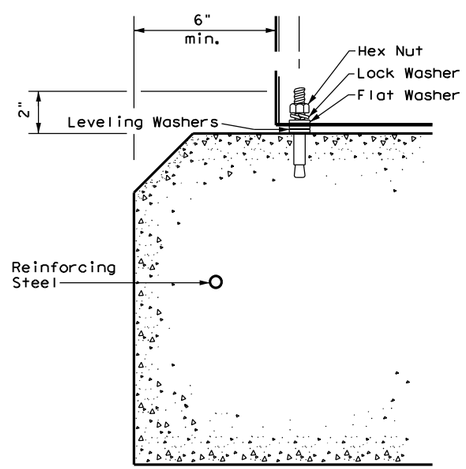

ANCHOR BOLT DETAIL

LEGEND	
1	Meter Socket, (when required)
2	Meter Socket Window, (when required)
3	Equipment Mounting Panel
4	Photo Electric Control Window, (When required)
5	Hinged Deadfront Trim
6	Load Side Conduit Trim
7	Line Side Conduit Area
8	Utility Access Door, with handle
9	Pedestal Door
10	Hinged Meter Access
11	Control Station (H-O-A Switch)
12	Main Disconnect
13	Branch Circuit Breakers
14	Copper Clad Ground Rod - 5/8" X 10'

Texas Department of Transportation

Traffic Operations Division Standard

ELECTRICAL DETAILS
ELECTRICAL SERVICE SUPPORT
PEDESTAL SERVICE TYPE PS

ED(9)-14

FILE: ed9-14.dgn	DN: TxDOT	CK: TxDOT	DW: TxDOT	CK: TxDOT	
© TxDOT October 2014	CONT	SECT	JOB	HIGHWAY	
REVISIONS	0922	33	076	CS	
	DIST		COUNTY		SHEET NO.
	LRD		WEBB		141

71J

DISCLAIMER:
The use of this standard is governed by the "Texas Engineering Practice Act". No warranty of any kind is made by TxDOT for any purpose whatsoever. TxDOT assumes no responsibility for the conversion of this standard to other formats or for incorrect results or damages resulting from its use.

DATE:
FILE:

DISCLAIMER:
The use of this standard is governed by the "Texas Engineering Practice Act". No warranty of any kind is made by TxDOT for any purpose whatsoever. TxDOT assumes no responsibility for the conversion of this standard to other formats or for incorrect results or damages resulting from its use.

TIMBER POLE (TP) SERVICE SUPPORT NOTES

1. Ensure electrical service support is a class 5 treated timber pole as per Item 627 "Treated Timber Poles." Embed timber pole to depth required in Item 627.
2. Conduit and electrical conductors attached to the electrical service pole and underground within 12 in. of service pole are not paid for directly but are subsidiary to the electrial service.
3. Install pole-top mounted photocell (T) on north side of pole, or in service enclosure (E) as required. See Electrical Service Data chart in plan set.
4. Gain pole as required to provide flat surface for each channel. Gain timber pole to 5/8 in. max. depth and 1 7/8 in. max. height. Gain pole in a neat and workmanlike manner.
5. Mount meter and service equipment on stainless steel or galvanized channel (Unistrut, Kindorf, or equal). Provide channel sized 1 in. to 3 3/4 in. maximum depth, and 1 1/2 in. to 1 5/8 in. maximum width. File smooth the cut ends of galvanized channel and paint with zinc rich paint before installing on pole. Secure each channel section to timber pole with two galvanized or SS lag bolts, 1/4 in. minimum diameter by 1 1/2 in. minimum length. Use a galvanized or SS flat washer on each lag bolt. Do not stack channel.
6. When excess length must be trimmed from poles, trim from the top end only.

(1) Class 5 pole, height as required

(2) Service drop from utility company (attached below weatherhead)

(3) Service conduit (RMC) and service entrance conductors - One Red, One Black, One White (See Electrical Service Data)

(4) Safety switch (when required)

(5) Meter (when required)

(6) Service enclosure

(7) 6 AWG bare grounding electrode conductor in 1/2 in. PVC to ground rod - extend 1/2 in. PVC 6 in. underground.

(8) 5/8 in. x 8 ft. Copper clad ground rod - drive ground rod to a depth of 2 in. to 4 in. below grade.

(9) RMC same size as branch circuit conduit.

(10) See pole-top mounted photocell detail on ED(5).

(11) When required by the serving utility provide bare 6 AWG copper conductor. Run wire from pole top to butt wrap or copper butt plate. Protect conductor with non-conductive material to a height of 8 ft. above finished grade.

(12) When required by utility, cut top of pole at an angle to enhance rain run off.

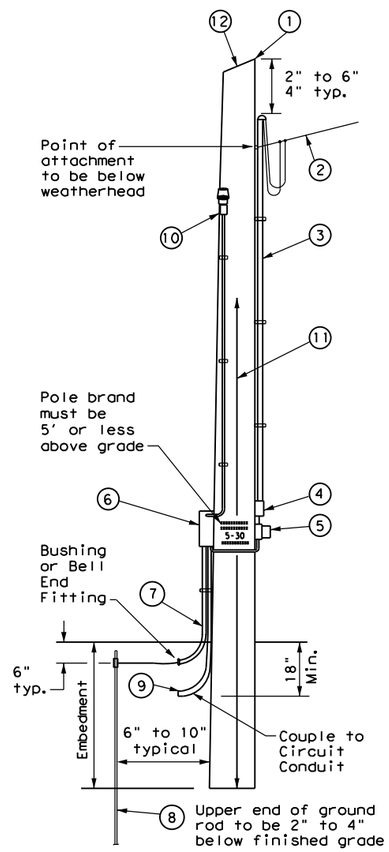

SERVICE SUPPORT TYPE TP (O)

GRANITE CONCRETE (GC) & OTHER CONCRETE (OC) NOTES

Ensure electrical service support structures bid as type Granite Concrete (GC) or Other Concrete (OC) meet the following requirements.

1. Provide GC and OC poles that meet the requirements of DMS 11080 "Electrical Services."
2. Provide prestressed concrete poles suitable for direct embedment into the ground without special foundations.
3. Verify poles are marked as required on DMS 11080. Location of marking should be approximately 4' above final grade. Use the two-point pickup locations when handling pole in horizontal position, and one-point pickup location for use in raising the pole to a vertical position. These marks are small but conspicuous.
4. Embed poles 42 in. or 10% of the length plus 2 ft., whichever is greater.
5. Ensure all installation details of services are in accordance with utility company specifications.
6. Install a one point rack or eye bolt bracket 6 inches to 12 inches below the weatherhead as an overhead service drop anchoring point for the electric utility.
7. Furnish and install galvanized or stainless steel channel strut 1 1/2 in. or 1 5/8 in. wide by 1 in. up to 3 3/4 in. deep (Unistrut, Kindorf, B-line or equal). Attach channel strut with stainless steel concrete anchors (max. 1" depth), square U-bolts or back to back channel strut with long bolts, or other secure mounting as approved by the Engineer. Ensure bolts are galvanized in accordance with ASTM A153. Do not stack channel struts.
8. Backfill the holes thoroughly by tamping in 6 in. lifts. After tamping to grade, place additional backfill material in a 6 inch high cone around the pole to allow for settling. Use material equal in composition and density to the surrounding area. Backfilling will not be paid for directly but is subsidiary to various bid items.

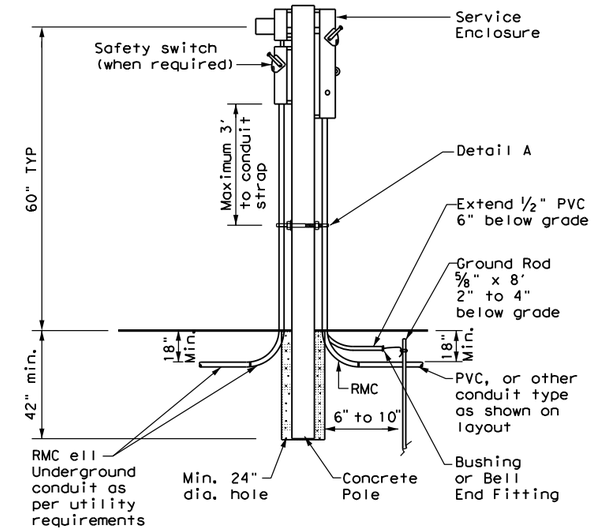

CONCRETE SERVICE SUPPORT

Underground (U)

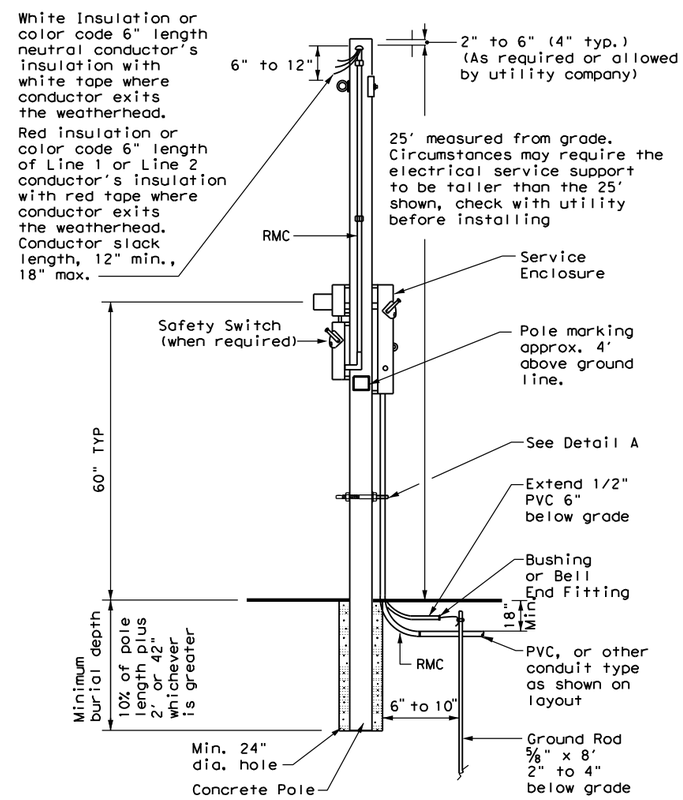

CONCRETE SERVICE SUPPORT

Overhead (O)

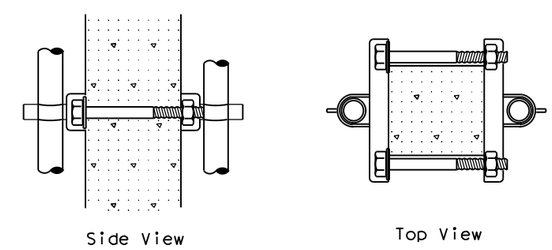

DETAIL A

See Note 7. Before installing channel that has been cut, file sharp edges and paint with zinc-rich paint. Ensure there is no paint splatter on the pole.

Texas Department of Transportation — Traffic Operations Division Standard

ELECTRICAL DETAILS SERVICE SUPPORT TYPES GC, OC, & TP

ED(10)-14

FILE: ed10-14.dgn	DN: TxDOT	CK: TxDOT	DW: TxDOT	CK: TxDOT
© TxDOT October 2014	CONT	SECT	JOB	HIGHWAY
REVISIONS	0922	33	076	CS
	DIST		COUNTY	SHEET NO.
	LRD		WEBB	142

71K

DATE:
FILE:

DUCT CABLE & HDPE CONDUIT NOTES

1. Provide duct cable in accordance with Departmental Material Specification (DMS) 11060 "Duct Cable" and Item 622 "Duct Cable." Provide duct cable as listed on the Material Producer List (MPL) on the Department web site under "Roadway Illumination and Electrical Supplies" Item 622.

2. Provide High-Density Polyethylene (HDPE) conduit in accordance with DMS 11060 and Item 618, "Conduit." Provide HDPE as listed on the MPL on the Department web site under "Roadway Illumination and Electrical Supplies," Item 618.

3. Supply duct cable with a minimum 2 in. diameter, unless otherwise shown in the plans. Provide duct cable and HDPE conduit as shown by descriptive code or on the plans. Bend duct cable and HDPE conduit as recommended by the manufacturer, with a minimum bending radius of 26 in. for 2 in. duct. Follow manufacturers' recommendations when handling duct cable and HDPE conduit reels and during installation of duct cable and HDPE conduit.

4. Do not splice conductors within duct cable or HDPE conduit. Couple duct cable and HDPE entering a ground box or foundation to a PVC elbow. When galvanized steel RMC elbows are called for in the plans and any portion of the RMC elbow is buried less than 18" from possible contact, ground the RMC elbow.

5. Furnish and install duct cable with factory installed conductors, sized as shown in the plans and as required by the National Electrical Code (NEC). The NEC contains specific requirements for duct cable in Article, "Nonmetallic Underground Conduit with Conductors: Type NUCC."

6. When conduit casing is called for in the plans, extend duct cable or HDPE conduit through the conduit casing in one continuous length without connection to the casing.

7. Seal the ends of duct cable or HDPE conduit with duct seal, expandable foam, or other approved method after completing the pull tests required by Item 622.

8. Provide minimum cover of 24 in. under roadways, 18 in. in other locations, or as shown on the plans.

9. Furnish and install listed fittings to couple duct cable or HDPE conduit to other types of conduit. Duct cable and HDPE conduit may be field-threaded and spliced with PVC or RMC threaded couplings; connected with listed tie-wrap fittings; connected using listed coupling made of HDPE with stainless steel external banding clamps and locking rings; connected with approved electrofusion conduit couplings; or connected using an approved chemical fusion method using an epoxy or adhesive specifically designed for HDPE couplings and connectors all installed in accordance with their manufacturer's instructions. Do not use PVC glue on HDPE. Do not use water pipe fittings, or connect conduit with heat shrink tubing.

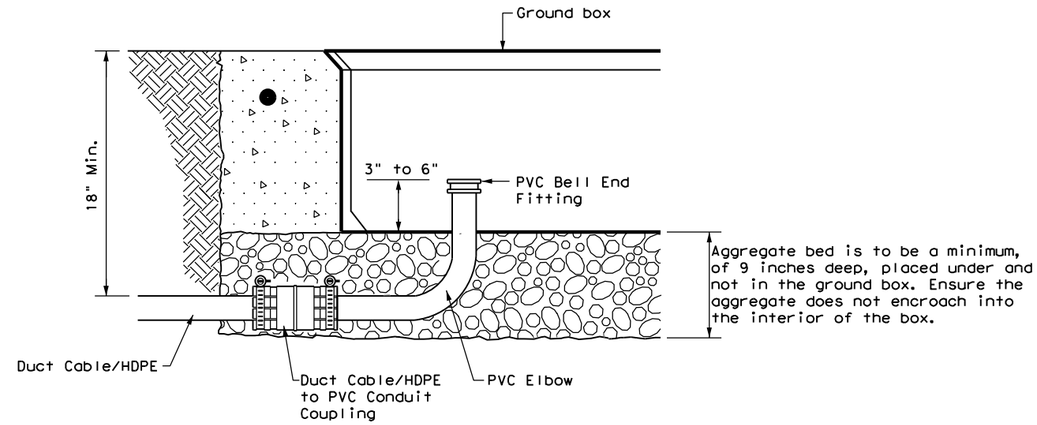

DUCT CABLE/HDPE AT GROUND BOX

When the upper end of an RMC Ell does not enter the ground box, it may be extended with a SCH-40 PVC conduit nipple and bell end, provided there is a minimum of 18" of cover over all parts of the elbow. If not, a rigid extension and ground bushing is required.

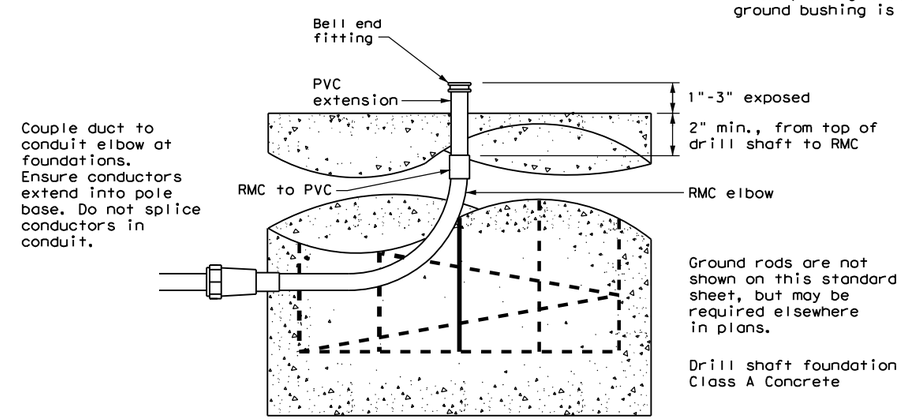

DUCT CABLE / HDPE AT FOUNDATION

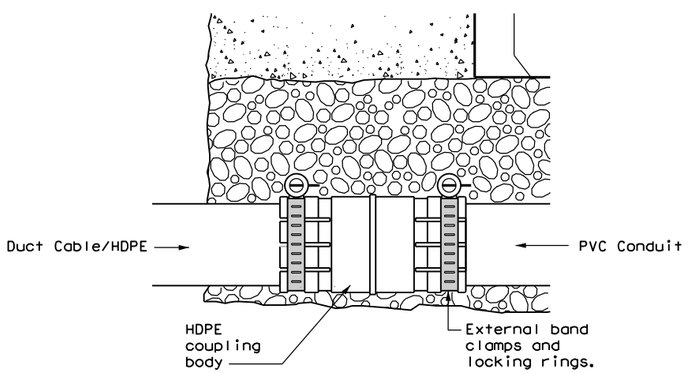

DUCT CABLE/HDPE TO PVC

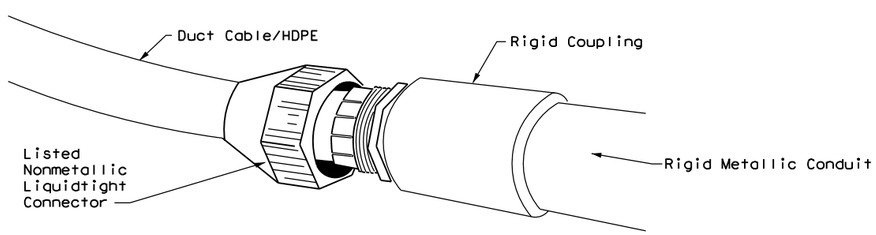

DUCT CABLE/HDPE TO RMC

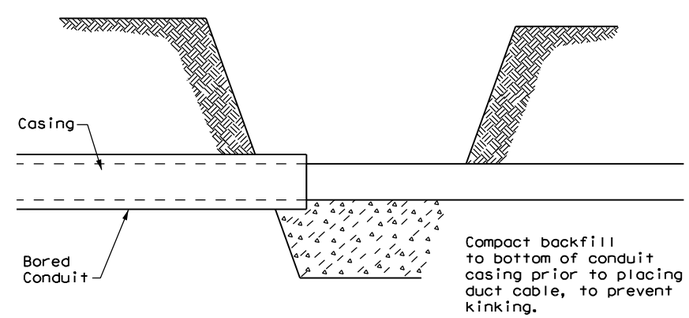

BORE PIT DETAIL

Texas Department of Transportation — Traffic Operations Division Standard

ELECTRICAL DETAILS DUCT CABLE/ HDPE CONDUIT

ED(11)-14

FILE: ed11-14.dgn	DN: TxDOT	CK: TxDOT	DW: TxDOT	CK: TxDOT
© TxDOT October 2014	CONT	SECT	JOB	HIGHWAY
REVISIONS	0922	33	076	CS
	DIST		COUNTY	SHEET NO.
	LRD		WEBB	143

71L

DISCLAIMER:
The use of this standard is governed by the "Texas Engineering Practice Act". No warranty of any kind is made by TxDOT for any purpose whatsoever. TxDOT assumes no responsibility for the conversion of this standard to other formats or for incorrect results or damages resulting from its use.

DATE:
FILE:

DISCLAIMER:
The use of this standard is governed by the "Texas Engineering Practice Act". No warranty of any kind is made by TxDOT for any purpose whatsoever. TxDOT assumes no responsibility for the conversion of this standard to other formats or for incorrect results or damages resulting from its use.

ARM SIZE D_1	‡	A	B	C	D	E	CONN BOLT DIA
in.	in.	in.	in.	in.	in.	in.	in.
6.5	.179	12	9	9	6	1 ¾	1
7.5	.179	13	9	10	6	1 ¾	1
8.0	.179	14	10	11	7	2	1 ¼
9.0	.179	16	11	13	8	2	1 ¼
9.5	.179	17	12	14	9	2	1 ¼
9.5	.239	18	12	15	9	2	1 ¼
10.0	.239	18	12	15	9	2	1 ¼
10.5	.239	18	13	15	10	3	1 ½
11.0	.239	18	13	15	10	3	1 ½

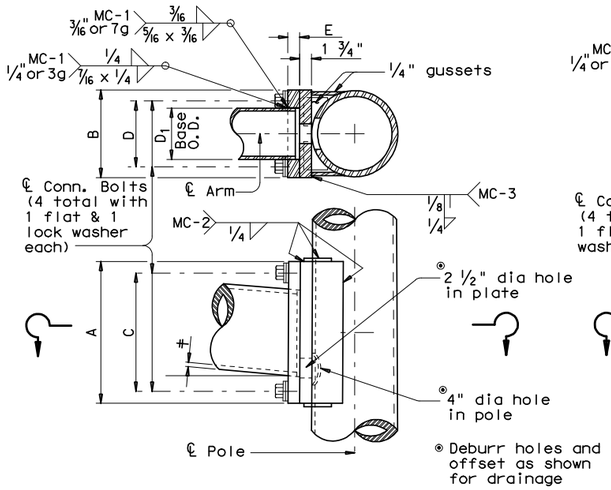

FIXED MOUNT DETAIL 1

ARM SIZE D_1	‡	A	F	CONN. BOLTS No.	CONN. BOLTS Dia	PIN BOLTS No.	PIN BOLTS Dia
in.	in.	in.	in.	ea.	in.	ea.	in.
6.5	.179	12	6	4	1	2	5/8
7.5	.179	14	8	4	1	2	5/8
8.0	.179	14	8	4	1	2	5/8
9.0	.179	16	10	4	1	2	5/8
9.5	.179	18	12	4	1 ¼	3	5/8
9.5	.239	18	12	4	1 ¼	3	5/8
10.0	.239	18	12	4	1 ¼	3	5/8

ARM SIZE D_1	‡	A	B	C	D	E	CONN BOLT DIA
in.	in.	in.	in.	in.	in.	in.	in.
7.0	.179	11	11	8	8	1 ¾	1 ¼
7.5	.179	11	11	8	8	1 ¾	1 ¼
8.0	.179	11	11	8	8	2	1 ¼
9.0	.179	13	13	10	10	2	1 ¼
10.0	.179	13	13	10	10	2	1 ¼
9.5	.239	13	13	10	10	2	1 ¼
10.0	.239	14	14	11	11	2	1 ½
11.0	.239	14	14	11	11	3	1 ½
11.5	.239	14	14	11	11	3	1 ½

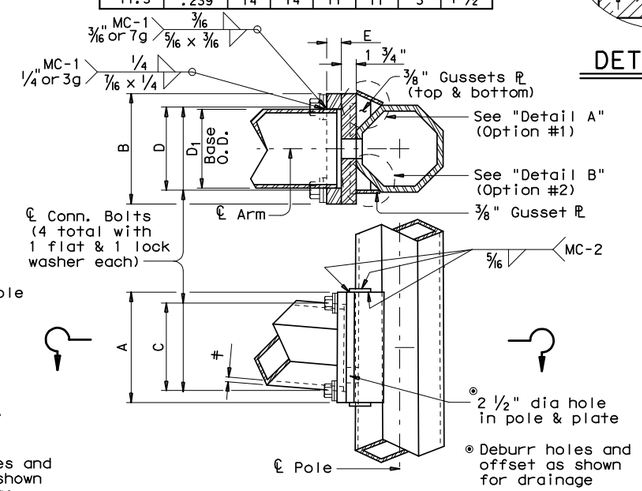

FIXED MOUNT DETAIL 2

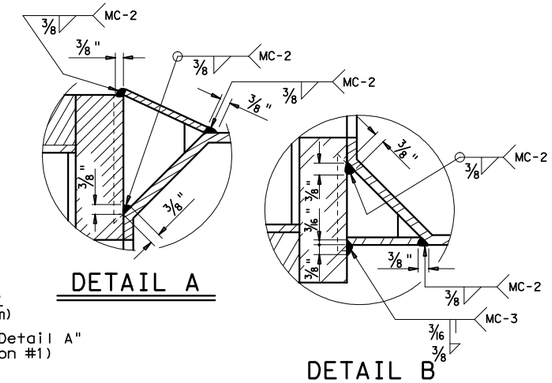

DETAIL A

DETAIL B

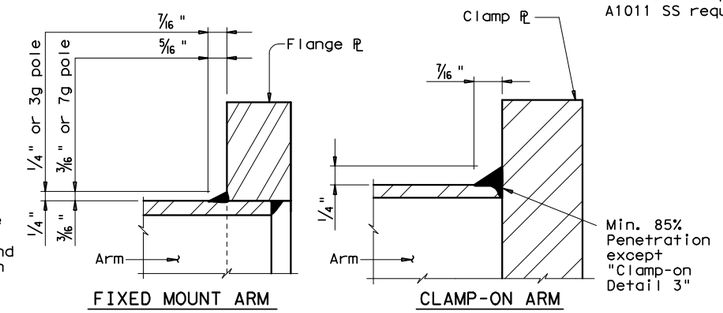

FIXED MOUNT ARM

CLAMP-ON ARM

ARM BASE WELD DETAILS

ARM SIZE D_1	‡	A	F	CONN. BOLTS No.	CONN. BOLTS Dia	PIN BOLTS No.	PIN BOLTS Dia
in.	in.	in.	in.	ea.	in.	ea.	in.
6.5	.179	12	6	4	1	2	5/8
7.5	.179	14	8	4	1	2	5/8
8.0	.179	14	8	4	1	2	5/8
9.0	.179	16	10	4	1	2	5/8
9.5	.179	18	12	6	1	3	5/8
9.5	.239	18	12	6	1	3	5/8
10.0	.239	18	12	6	1	3	5/8

MATERIALS	
Round Shafts or Polygonal Shafts ①	ASTM A595 Gr.A, A588, A1008 HSLAS Gr.50 Class 2, A1011 HSLAS Gr.50 Class 2, A572 Gr.50 or A1011 SS Gr.50 ②
Plates ①	ASTM A36, A588, or A572 Gr.50
Connection Bolts	ASTM A325 or A449, except where noted
Pin Bolts	ASTM A325
Pipe ①	ASTM A53 Gr.B, A501, A1008 HSLAS-F Gr.50, A1011 HSLAS-F Gr.50
Misc. Hardware	Galvanized steel or stainless steel or as noted

① ASTM A572, A1008 HSLAS, A1011 HSLAS, A1008 HSLAS-F, A1011 HSLAS-F or A1011 SS may have higher yield strengths but shall not have less elongation than the grade indicated.

② ASTM A1011 SS Gr.50 material shall also have a minimum elongation of 18 percent in 8 inches or 23 percent in 2 inches. Material thickness in excess of those stipulated under A1011 SS will be acceptable providing the material meets all other A1011 SS requirements and the requirements of this item.

GENERAL NOTES:

Clamp-on details are used for the second arm on dual mast arm assemblies. A Maximum 1 ½" wide vertical slotted hole shall be cut in the front clamp plate to facilitate drainage during galvanizing. The slot shall be centered behind the arm and shall be no longer than the arm diameter minus 1"

Fixed mount details are used for single mast arm assemblies and for the first arm on dual mast arm assemblies.

Where duplicate parts occur on a detail, welds shown for one part shall apply to all similar parts on the detail.

Pin bolts are required to prevent rotation of clamp-on arms under design wind forces.

NOTE:

Pin bolts shall be A325 with threads excluded from the shear plane. Pin bolt and ¾" dia pipe shall have 9/16" dia holes for a 1/8" dia galvanized cotter pin. Back clamp plate shall be furnished with a ¾" dia hole for each pin bolt. An 11/16" dia hole for each pin bolt shall be field drilled through the pole after arm orientations have been approved by the Engineer.

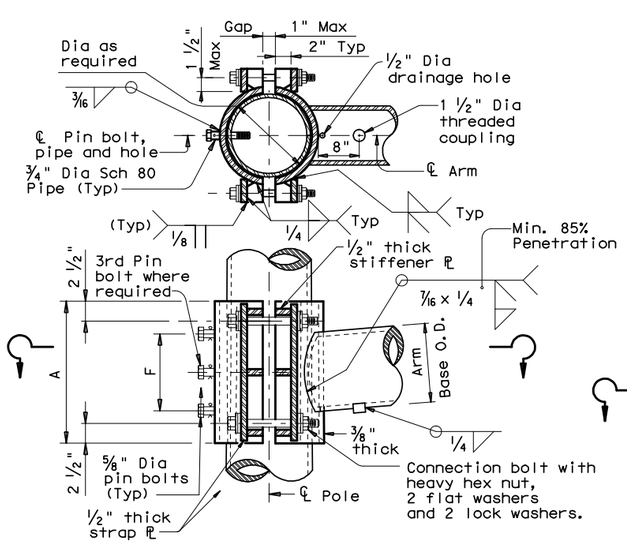

CLAMP-ON DETAIL 1

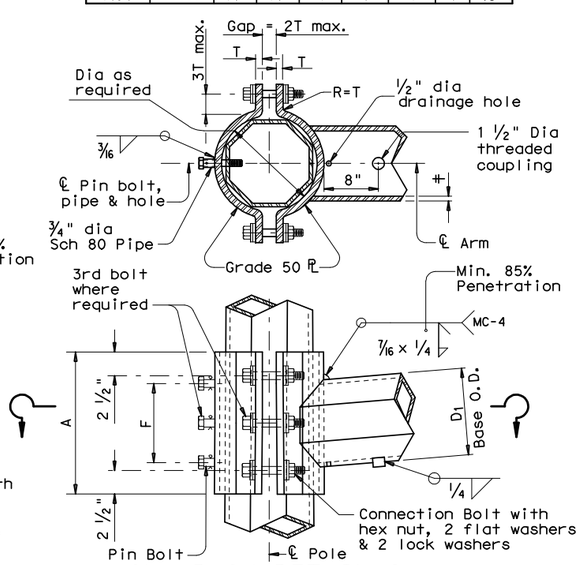

CLAMP-ON DETAIL 2

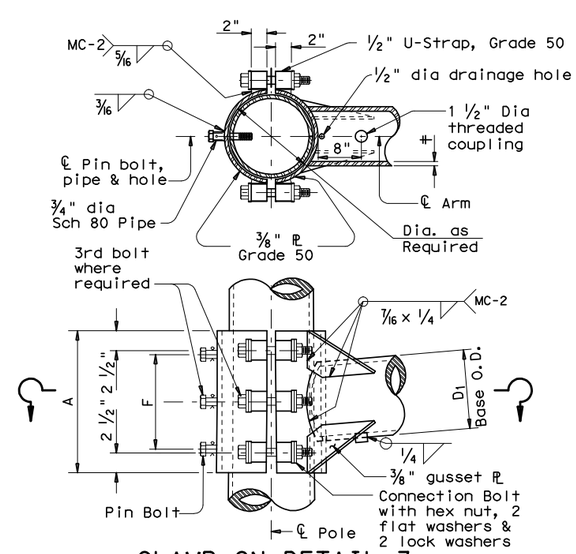

CLAMP-ON DETAIL 3

Texas Department of Transportation
Traffic Operations Division

STANDARD ASSEMBLY FOR TRAFFIC SIGNAL SUPPORT STRUCTURES

MAST ARM CONNECTIONS

MA-C-12

©TxDOT August 1995

DN: MS	CK: JSY	DW: MMF	CK: JSY

REVISIONS: 5-96, 5-09, 1-12

CONT	SECT	JOB	HIGHWAY
0922	33	076	CS
DIST		COUNTY	SHEET NO.
LRD		WEBB	144

126A

DATE:
FILE:

DISCLAIMER: The use of this standard is governed by the "Texas Engineering Practice Act". No warranty of any kind is made by TxDOT for any purpose whatsoever. TxDOT assumes no responsibility for the conversion of this standard to other formats or for incorrect results or damages resulting from its use.

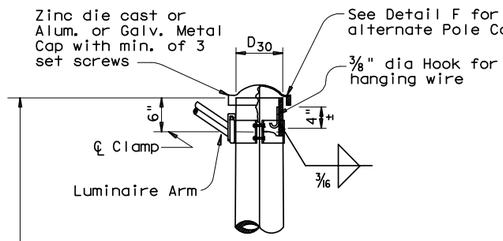

DETAIL A

(for pole with luminaire)

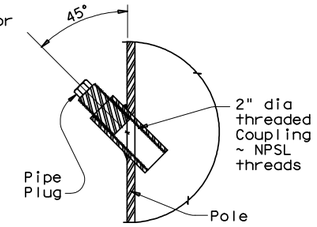

POLE COUPLING DETAIL

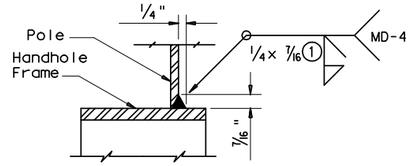

DETAIL G

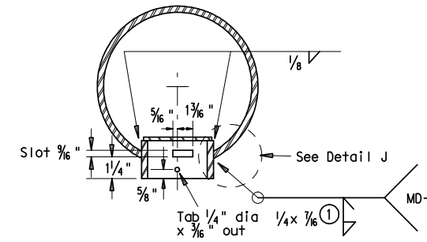

SECTION X-X

Opening for access compartment shall be no more than 1/16 inch wider than the access compartment itself.

DETAIL J

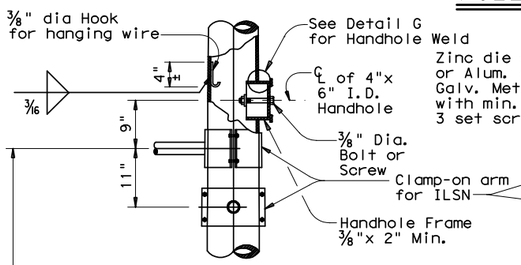

DETAIL B

(If ILSN applied)

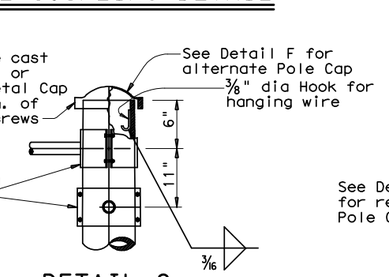

DETAIL C

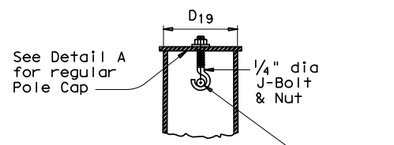

SECTION Y-Y

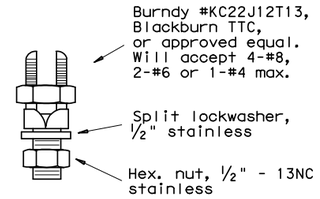

COPPER GROUND CONNECTOR

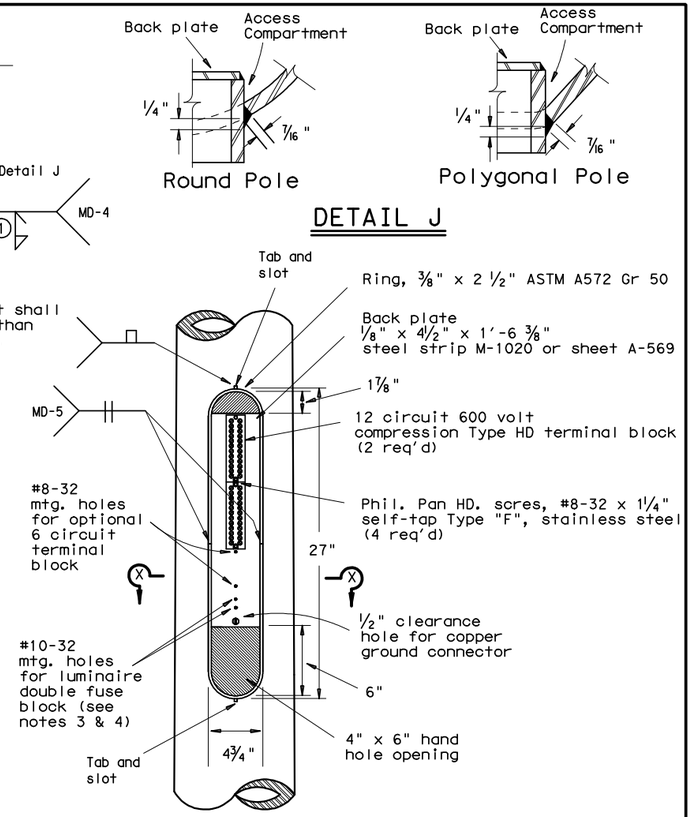

ACCESS COMPARTMENT

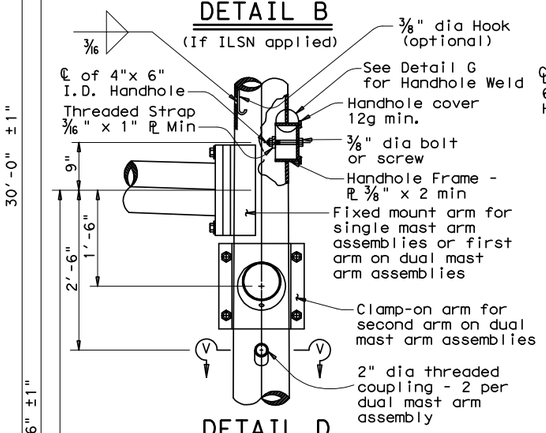

DETAIL D

(for 30' pole with luminaire and ILSN sign)

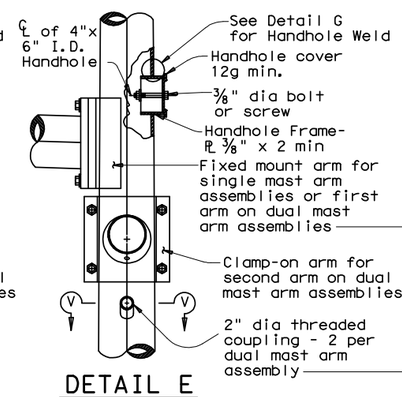

DETAIL E

(for 24' pole with ILSN sign and no luminaire)

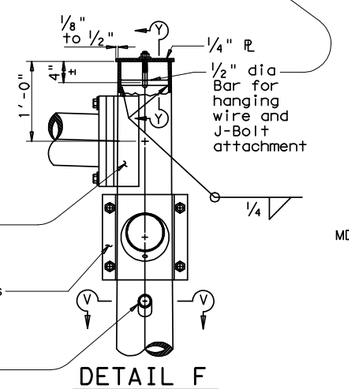

DETAIL F

(for 19' pole with no ILSN sign and no luminaire)

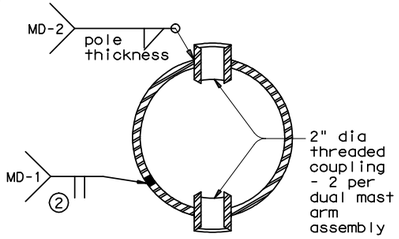

SECTION V-V

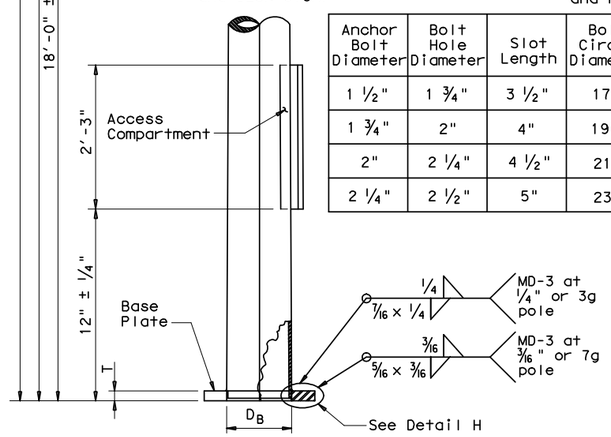

POLE ELEVATION

Anchor Bolt Diameter	Bolt Hole Diameter	Slot Length	Bolt Circle Diameter	Base PL Dim. L x T	Adjust. Range
1 1/2"	1 3/4"	3 1/2"	17"	18" x 1 1/2"	13.4°
1 3/4"	2"	4"	19"	20" x 1 3/4"	13.5°
2"	2 1/4"	4 1/2"	21"	22" x 2"	13.6°
2 1/4"	2 1/2"	5"	23"	24" x 2 1/4"	13.7°

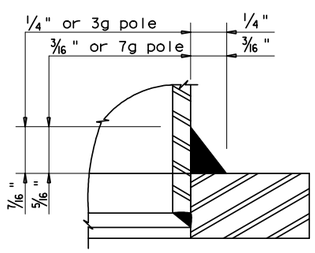

DETAIL H

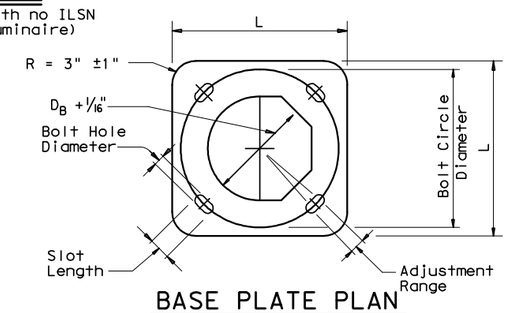

BASE PLATE PLAN

① 85% Min. penetration

② 60% Min. penetration 100% pemetration within 6" of circumferential base welds.

NOTES:

1. The cover shall be one piece formed from ABS plastic, shall be a pearl gray color, and shall be suitable for exposure to harsh sunlight and extreme weather. Cover shall latch with two screw latches and shall fit tightly to the enclosure ring to create a rainproof seal. Latch screws shall be 1/4-20 stainless flat socket head screws with tamper proof feature.
2. The pole manufacturer shall provide with each pole a separate kit consisting of: one cover with two latching assemblies, two terminal strips (Marathon #985GP12CU or approved equal), four #8-32 x 1 1/4" self tapping type "F" stainless steel pan head screws, and one ground connector (Blackburn TTC, Burndy KC22J12T13, or Ilsco SSS-5). The traffic signal contractor shall install the kit items in the field.
3. The screw hole spacing on the enclosure back plate shall be for two Marathon #985GP12 terminal strips, one Marathon #985GP06CU terminal strip, and one Bussmann #BM6032B fuse block.
4. Install one Bussmann #BM6032B, Littelfuse #L60030M-2C, or Ferraz-Shawmut #30352 fuse block for poles where luminaires are to be installed.

Texas Department of Transportation
Traffic Operations Division

TRAFFIC SIGNAL SUPPORT STRUCTURES MAST ARM POLE DETAILS

MA-D-12

© TxDOT August 1995

DN: MS	CK: JSY	DW: FDN	CK: CAL

REVISIONS
8-99
1-12

CONT	SECT	JOB	HIGHWAY
0922	33	076	CS

DIST	COUNTY	SHEET NO.
LRD	WEBB	145

DATE:
FILE:

DISCLAIMER:
The use of this standard is governed by the "Texas Engineering Practice Act". No warranty of any kind is made by TxDOT for any purpose whatsoever. TxDOT assumes no responsibility for the conversion of this standard to other formats or for incorrect results or damages resulting from its use.

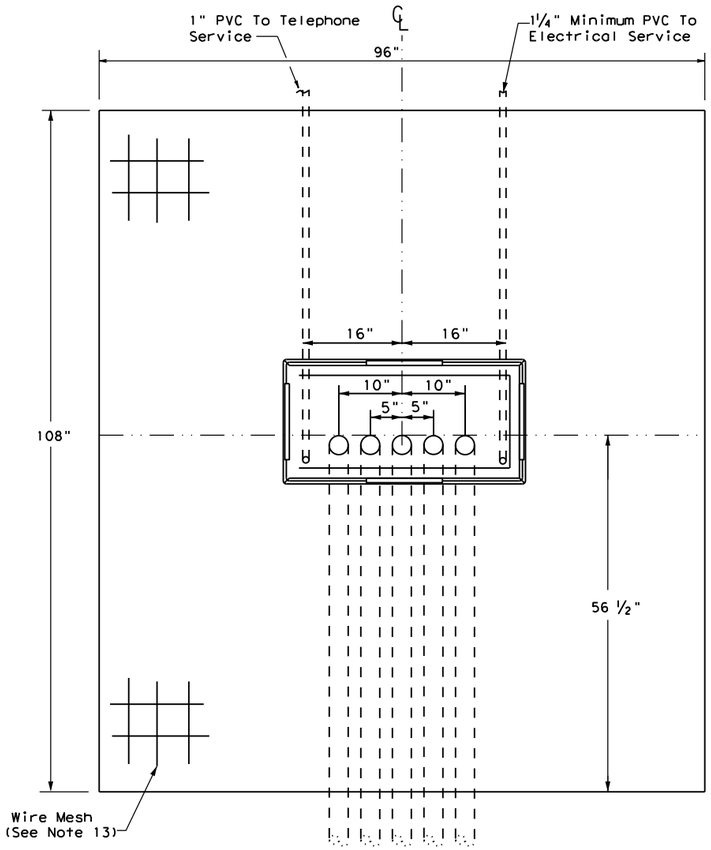

TOP VIEW

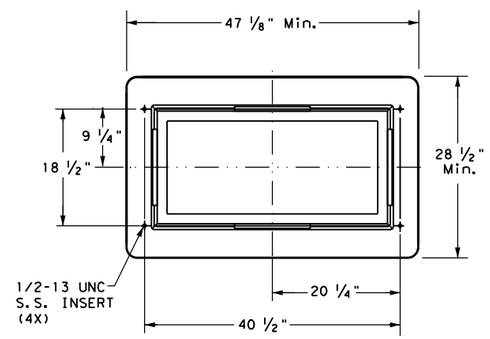

CABINET BASE

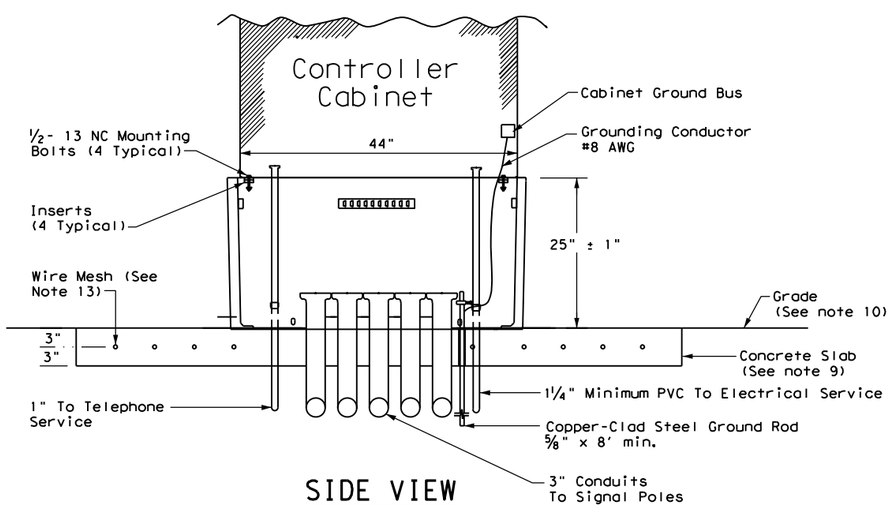

SIDE VIEW

TRAFFIC SIGNAL CONTROLLER BASE:

1. Provide a traffic signal controller base (cabinet base) manufactured of polymer concrete material consisting of calcareous and siliceous stone; glass fibers and thermoset polyester resin. The polymer concrete cabinet base must be reinforced on the inside of the cabinet base with fiberglass matting. Provide one of the following bases: Armorcast Part # A6001848X24, Quazite Model # PG3048Z709, or other as approved by TxDOT Traffic Safety Division.

2. The polymer concrete material must have a minimum compressive strength of 10,300 pounds per square inch (psi), minimum flexural strength of 3600 psi, and minimum shear strength of 3600 psi.

3. The polymer concrete cabinet base must conform to the dimensions shown and must accommodate a standard TxDOT basemount cabinet.

4. Supply the cabinet base with four 1#2"-13 UNC stainless steel inserts for attachment of the cabinet to the base. Inserts must withstand a minimum torque of 50 ft-lb and a minimum straight pull out strength of 750 lbs.

5. Provide the cabinet base with 4 cable racks mounted one on each side of the base 2" to 7 " from the top edge of the base. Unless approved otherwise, cable racks must be 1-1/2 x 9#16x 3#16inch steel channel with eight T-slots spaced at 1-1/2 inches. The cable racks must easily accommodate the insertion of tie wraps to attach field wiring to the racks to serve as strain relief. Secure cable racks to the base using 1#2"-13 UNC stainless steel screws and inserts.

6. The cabinet base, when secured to the concrete slab with controller cabinet attached, must withstand a minimum wind load of 125 mph or a 850 lb force applied at 49" above the bottom of the base without causing the base or cabinet to come out of their anchored position or cause any permanent deformation. The manufacturer must supply certification by an independent testing laboratory or sealed by a Texas Licensed Professional Engineer. Provide the cabinet base with hardware for attachment to a concrete slab.

7. The traffic signal base must be permanently marked either by impress or by permanent ink with the manufacturer's model number and name or logo.

8. Seal the base to the concrete with a silicone caulk bead and fastened to the slab per manufacturer's instructions.

CONCRETE SLAB:

9. Traffic signal controller pad must be a portland cement concrete slab poured in place, must conform to the dimensions shown, and must be level.

10. Grade earthwork such that it is flush with the concrete pad on all four sides, unless otherwise shown on the plans. Subsidiary to ITEM 680, four inch rip rap may be used in lieu of earthwork. Slopes shall gradually contour to match plans.

11. Bond a #8 AWG copper ground wire and an 8 ft ground rod bonded to the reinforcing mesh by a suitable UL Listed clamp and terminated to the cabinet grounding bus for the purpose of providing a local ground for the electrical grounding conductor. The electrical grounding conductor specified in Item 680-3.A.4 is required and must be terminated to the cabinet ground bus.

12. Install a PVC sleeve to prevent the ground rod from direct embedment in the slab.

13. Provide welded wire mesh 6X6-W2.9 X W2.9 for reinforcement. Provide joints and splices in the mesh with a minimum 6-inch overlap. Center the mesh between top and bottom and provide a minimum 3 inch cover on the edges.

14. Provide Class B concrete minimum for the slab in accordance with Item 421. Construct the slab in accordance with Item 531.

CONDUITS:

15. Stub up and run 3-inch conduits through the slab to the various traffic signal poles and ground boxes as shown on the layouts. Install the number of conduits as shown on layouts plus two additional 3 inch conduits for future use. Terminate the conduits with a bushing between 2 and 4-inches above the slab.

16. Extend conduits for future use at least 18-inches from the edge of the slab, terminate underground with a coupling, and cap and seal so that the seal can be removed without damaging the coupling. This must also apply to unused telephone conduit.

17. Stub up two separate conduits through the slab from the electrical and telephone services. Run the conduit for the electrical feed directly to the electrical service enclosure. Run the conduit for the telephone line directly to the telephone service, usually located on the same pole as the electrical service. Telephone must not under any circumstance share a conduit with any other function.

18. Terminate electric and telephone conduits above the slab with a coupling. After the base is installed, extend the conduits above the top of the base and secure to the base using a steel one-hole strap or similar suitable substitute.

CONTROLLER CABINET:

19. Anchor the controller cabinet to the base using four stainless steel 1/2-13 NC bolts.

20. The silicone caulk bead specified in Item 680.3.B must be RTV 133.

PAYMENT:

21. Bid TS-CF as subsidiary to Item 680.

Texas Department of Transportation

Traffic Safety Division Standard

TRAFFIC SIGNAL CONTROLLER CABINET BASE AND PAD

TS-CF-21

FILE: ts-cf-21.dgn	DN:	CK:	DW:	CK:
©TxDOT October 2000	CONT	SECT	JOB	HIGHWAY
REVISIONS 12-04 2-21	0922	33	076	CS
	DIST		COUNTY	SHEET NO.
	LRD		WEBB	146

DATE:
FILE:

DISCLAIMER: The use of this standard is governed by the "Texas Engineering Practice Act". No warranty of any kind is made by TxDOT for any purpose whatsoever. TxDOT assumes no responsibility for the conversion of this standard to other formats or for incorrect results or damages resulting from its use.

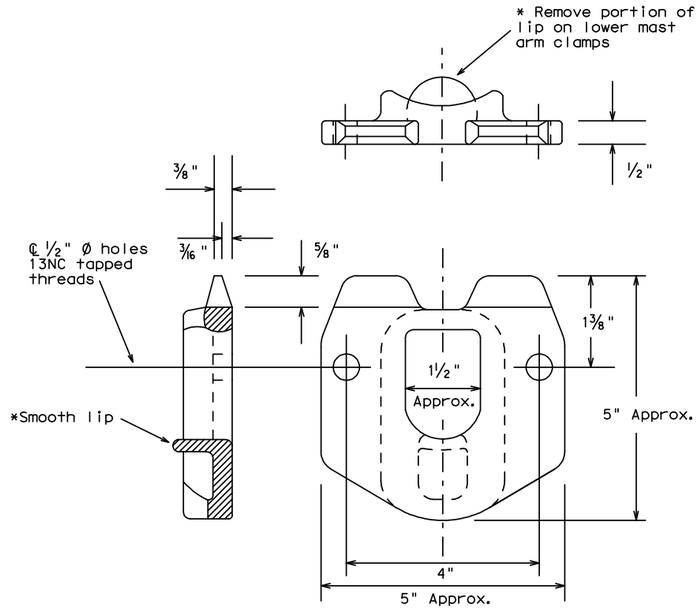

POLE SIMPLEX DETAILS

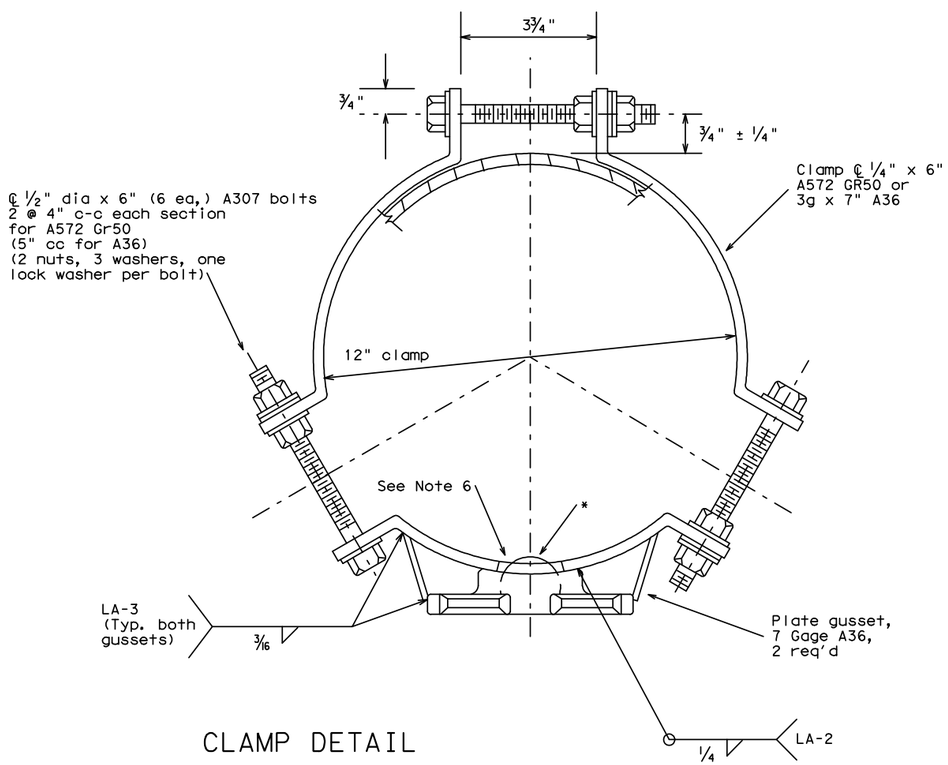

CLAMP DETAIL

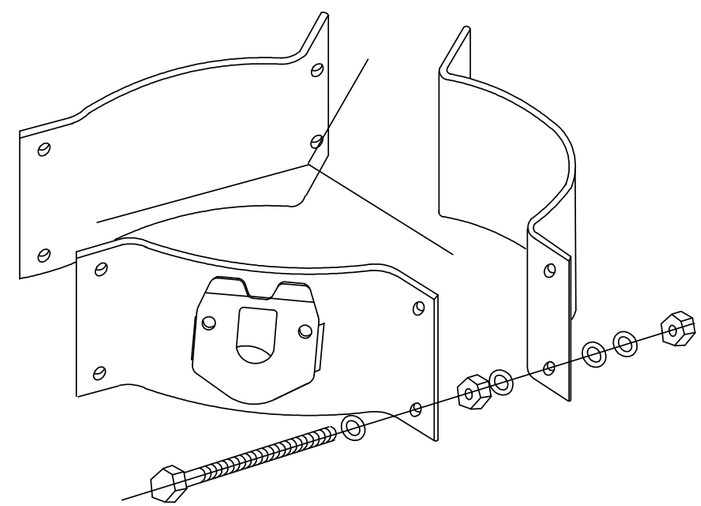

PROJECTION

OTHER MATERIALS:

1. Pole simplex shall be ASTM A27 GR65-35 or A148 GR80-50 or A576 GR1021. ASTM A576 must be suitable for forging and also meet minimum tensile of 65ksi, minimum yield of 35ksi, and a minimum elongation of 22 percent in 2 inches.
2. Welded tabs and backplates shall be ASTM A-36 steel or better.
3. Nylon insert locknuts shall conform to ASTM A563.

GENERAL NOTES:

1. Materials and fabrication shall be in accordance with Standard Sheet "MA-C" and with the details, dimensions, and weld procedures shown herein. Weld references call for preapproved weld procedures which the Fabricator must obtain prior to fabrication. In the absence of specified fabrication tolerances, dimensions shall be within the tolerances generally obtainable in normal fabrication practice.
2. All parts shall be galvanized after fabrication in accordance with Item 445, "Galvanizing". The throat of the Simplex shall be made free of all rough or sharp edges resulting from the galvanizing process.
3. Each simplex fitting shall be supplied with 2 ASTM A325 bolts, ½in. X 1½in. and 2 lock washers. The bolts and lock washers shall be secured to the clamp with the other hardware items. The Fabricator shall ship clamp assembly together in a single package, including all bolts, nuts, and washers required for the clamp and simplex fitting.
4. Design conforms to 1994 AASHTO "Standard Specifications for Structural Supports for Highway Signs, Luminaires, and Traffic Signals" and interim revisions thereto. Design Wind Speed equals 80 mph plus a 1.3 gust factor. Clamps are designed to support a 60 lb. luminaire having an effective projected area (actual area times drag coefficient) of 1.6 sq.ft.,12 ft. maximum arm length.
5. Each assembly shall consist of one upper piece simplex fitting having a smooth lip and one lower piece simplex fitting with the lip removed.
6. Approximately 2 in. diameter hole in upper mast arm clamp.

For 8.9 - 12 inch diameter Signal Poles
(Two req'd for each mast arm)

Texas Department of Transportation
Traffic Operations Division

CLAMP ON FITTING ASSEMBLY FOR LUMINAIRE MAST ARM

CFA-12

© TxDOT

DN: KAB	CK: RES	DW: FDN	CK: CAL

REVISIONS
11-99
1-12

CONT	SECT	JOB	HIGHWAY
0922	33	076	CS
DIST		COUNTY	SHEET NO.
LRD		WEBB	147

DATE:
FILE:

DISCLAIMER:
The use of this standard is governed by the "Texas Engineering Practice Act". No warranty of any kind is made by TxDOT for any purpose whatsoever. TxDOT assumes no responsibility for the conversion of this standard to other formats or for incorrect results or damages resulting from its use.

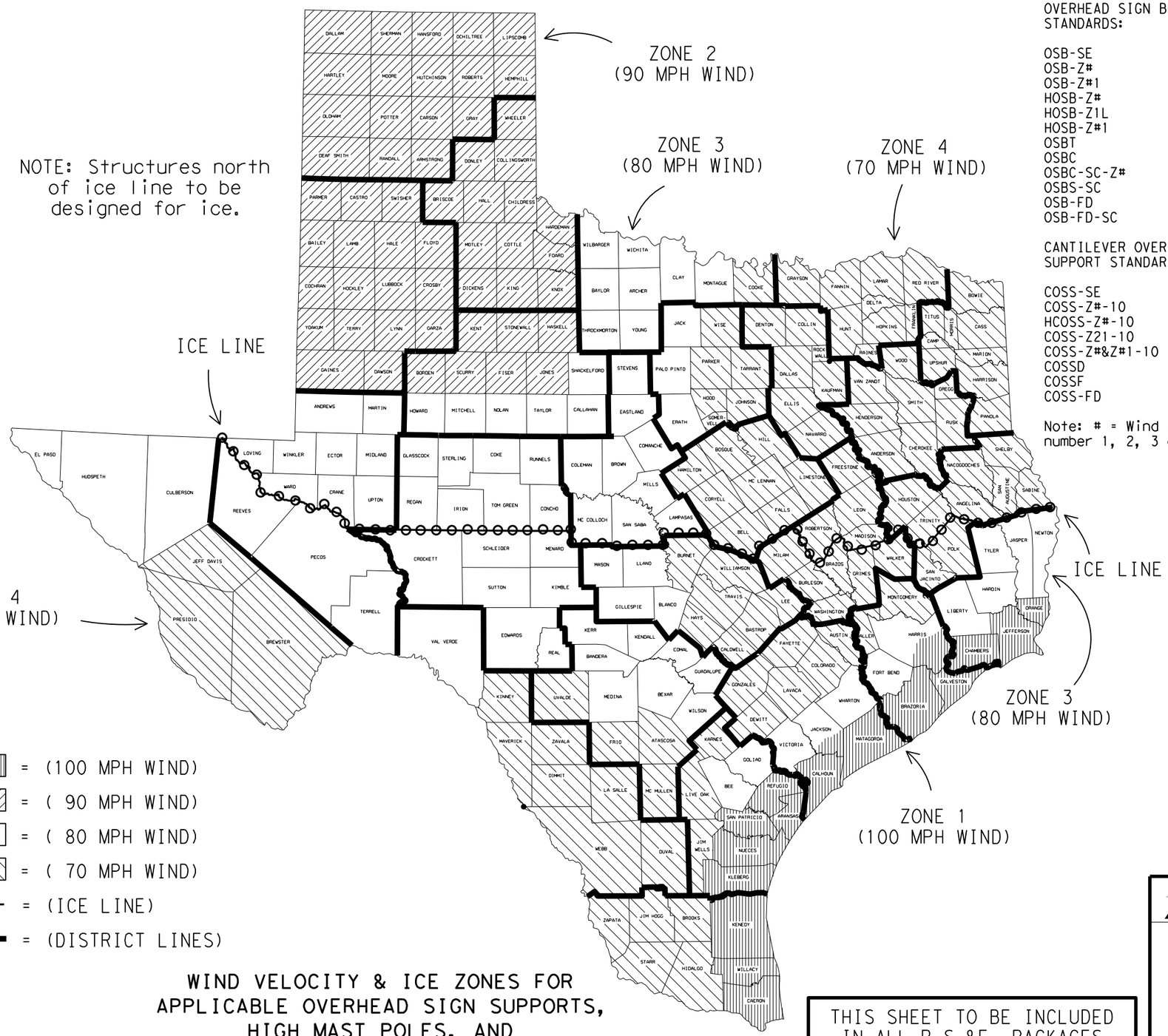

LEGEND

ZONE 1 - = (100 MPH WIND)
ZONE 2 - = (90 MPH WIND)
ZONE 3 - = (80 MPH WIND)
ZONE 4 - = (70 MPH WIND)
= (ICE LINE)
= (DISTRICT LINES)

APPLICABLE STANDARDS SHEETS

OVERHEAD SIGN BRIDGE STANDARDS:

OSB-SE
OSB-Z#
OSB-Z#1
HOSB-Z#
HOSB-Z1L
HOSB-Z#1
OSBT
OSBC
OSBC-SC-Z#
OSBS-SC
OSB-FD
OSB-FD-SC

CANTILEVER OVERHEAD SIGN SUPPORT STANDARDS:

COSS-SE
COSS-Z#-10
HCOSS-Z#-10
COSS-Z21-10
COSS-Z#&Z#1-10
COSSD
COSSF
COSS-FD

Note: # = Wind Zone number 1, 2, 3 or 4

HIGH MAST ILLUMINATION POLE STANDARDS:

HMIP-98
HMIF-98

WALKWAYS AND BRACKETS STANDARDS:

SWW
SB(SWL-1)

TRAFFIC SIGNAL POLE STANDARDS:

SP-80
SP-100
SMA-80
SMA-100
DMA-80
DMA-100
MA-C
MAC(ILSN)
MAD-D
TS-FD
LUM-A
CFA
LMA
TS-C
MA-DPD

FOR HARRIS CO. ONLY
Zone line is just North of US 90, around on the North, West and South sides of IH 610 and down the West side of SH 288.

FOR JACKSON CO. ONLY
Zone line is just North of SH 616.

WIND VELOCITY & ICE ZONES FOR APPLICABLE OVERHEAD SIGN SUPPORTS, HIGH MAST POLES, AND TRAFFIC SIGNAL POLES

Based on 50 Year Mean Recurrence Interval of Fastest Mile Wind Velocity at 33 feet height.

THIS SHEET TO BE INCLUDED IN ALL P.S.&E. PACKAGES CONTAINING ONE OR MORE OF THE APPLICABLE STANDARD SHEETS LISTED HEREON

Texas Department of Transportation

Traffic Operations Division Standard

WIND VELOCITY AND ICE ZONES

WV & IZ-14

FILE: windice.dgn	DN: TxDOT	CK: TxDOT	DW: TxDOT	CK: TxDOT
© TxDOT April 1996	CONT	SECT	JOB	HIGHWAY
REVISIONS	0922	33	076	CS
8-14-Added ilsz of applicable standards, restricting use to structures designed for Fastest Mile wind speeds.	DIST		COUNTY	SHEET NO.
	LRD		WEBB	148

DATE:
FILE:

DISCLAIMER:
The use of this standard is governed by the "Texas Engineering Practice Act". No warranty of any kind is made by TxDOT for any purpose whatsoever. TxDOT assumes no responsibility for the conversion of this standard to other formats or for incorrect results or damages resulting from its use.

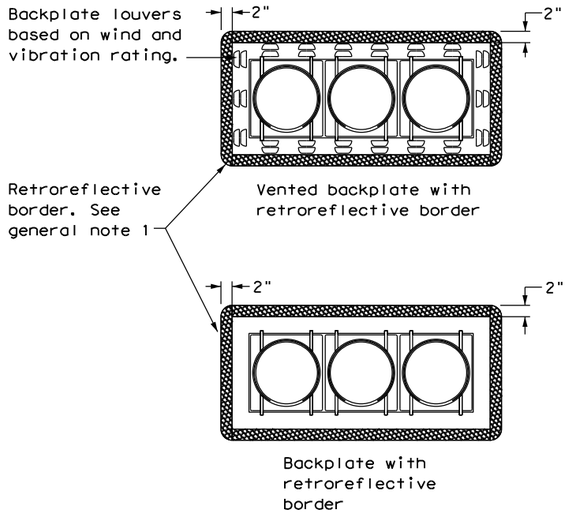

THREE-SECTION HEAD
HORIZONTAL OR VERTICAL

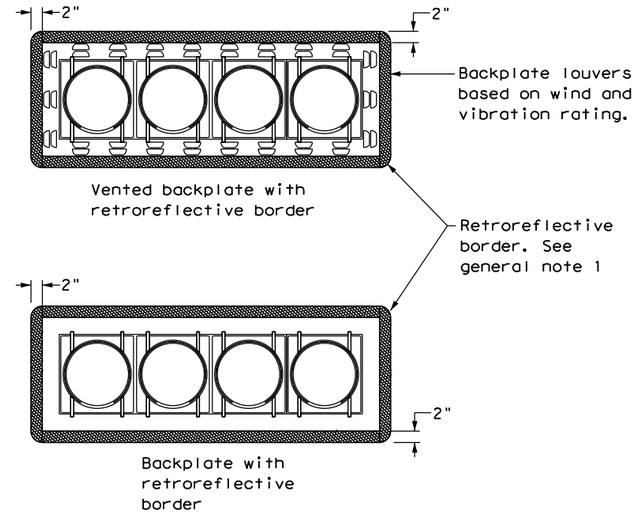

FOUR-SECTION HEAD
HORIZONTAL OR VERTICAL

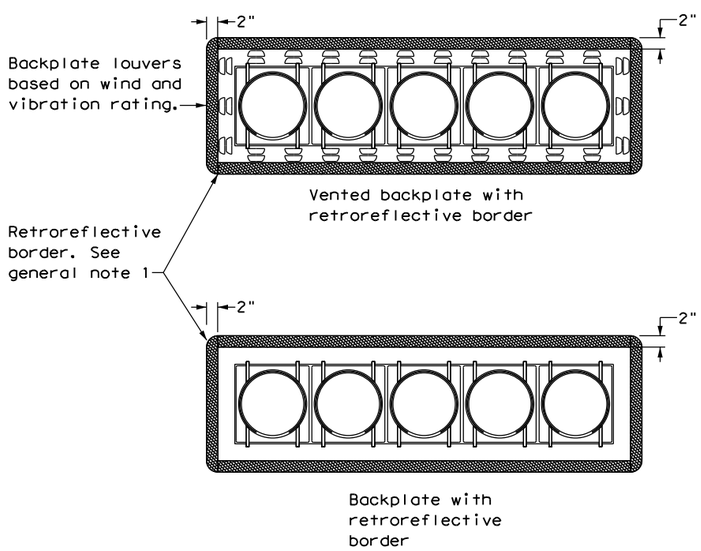

FIVE-SECTION HEAD
HORIZONTAL OR VERTICAL

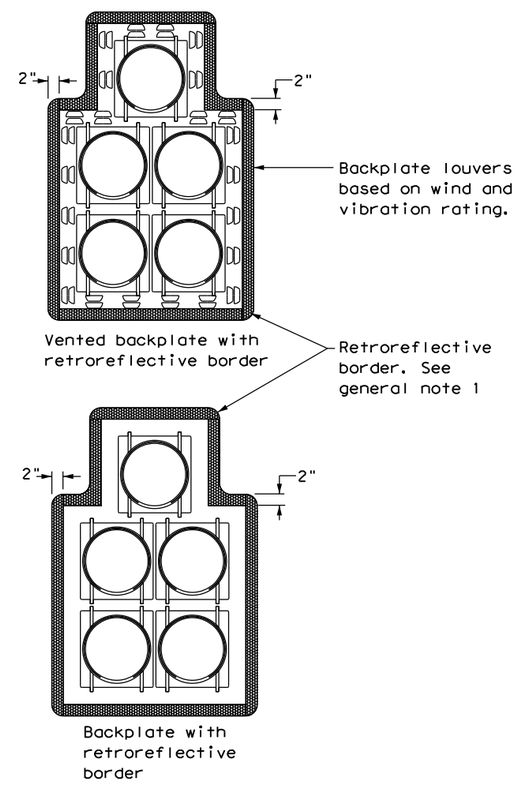

FIVE-SECTION HEAD
CLUSTER

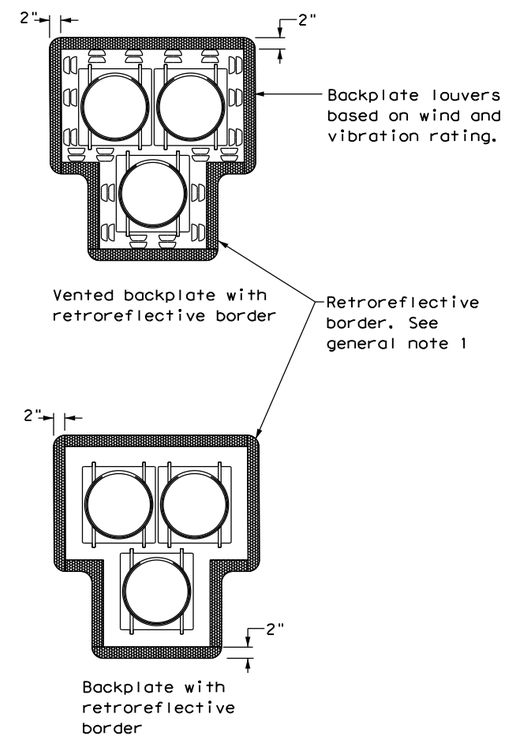

PEDESTRIAN HYBRID
BEACON

GENERAL NOTES:

1. Backplates are optional for traffic signals and pedestrian hybrid beacons. When backplates are used, a 2-inch wide fluorescent yellow AASHTO Type B_{FL} or C_{FL} retroreflective border conforming to TxDOT DMS-8300 is required. Place on all approaches when used.
2. Signal head and backplate compatability must be verified by the contractor prior to installation.
3. When using backplates on signal heads, venting is preferred to reduce cyclic vibration stress.
4. When a vented backplate is used, the retroreflective border must not be placed over the louvers.
5. This standard sheet applies to all signal heads with backplates, including but not limited to:
   - Pole mounted
   - Overhead mounted
   - Span wire mounted
   - Mast arm mounted
   - Vertical signal heads
   - Horizontal signal heads
   - Clustered signal heads
   - Pedestrian hybrid beacons

Texas Department of Transportation

Traffic Safety Division Standard

TRAFFIC SIGNAL HEAD WITH BACKPLATE
TS-BP-20

FILE: ts-bp-20.dgn	DN: TxDOT	CK: TxDOT	DW: TxDOT	CK: TxDOT
© TxDOT June 2020	CONT	SECT	JOB	HIGHWAY
REVISIONS	0922	33	076	CS
	DIST		COUNTY	SHEET NO.
	LRD		WEBB	149

DATE:
FILE:

DISCLAIMER: The use of this standard is governed by the "Texas Engineering Practice Act". No warranty of any kind is made by TxDOT for any purpose whatsoever. TxDOT assumes no responsibility for the conversion of this standard to other formats or for incorrect results or damages resulting from its use.

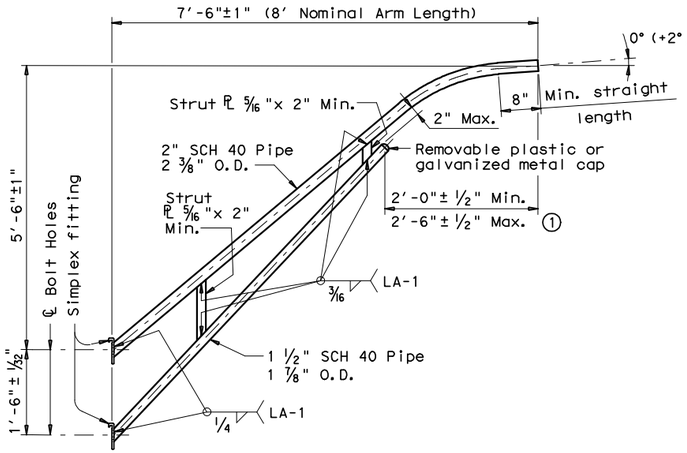

8-FOOT LUMINAIRE ARM

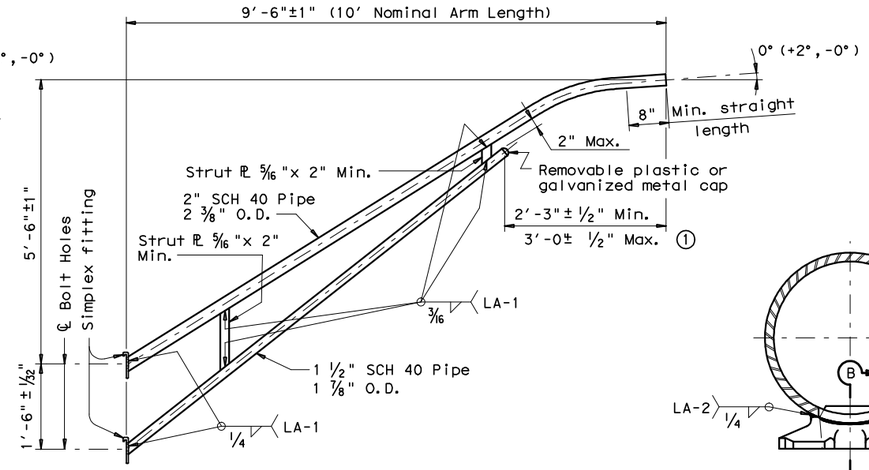

10-FOOT LUMINAIRE ARM

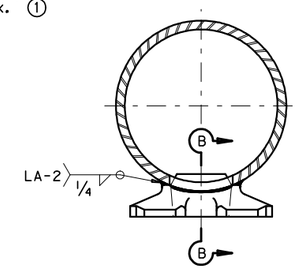

DIRECT ATTACHMENT DETAIL

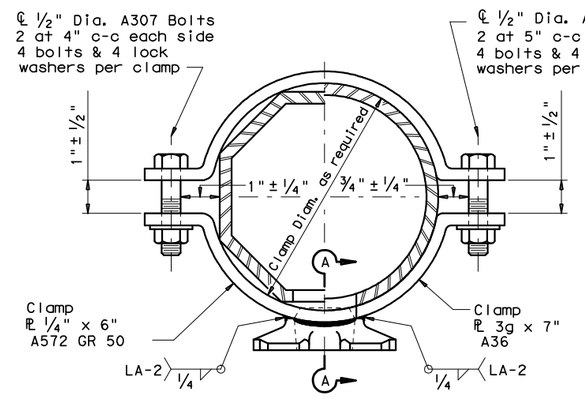

CLAMP ATTACHMENT DETAIL NO. 1
(HALF SECTION)

CLAMP ATTACHMENT DETAIL NO. 2
(HALF SECTION)

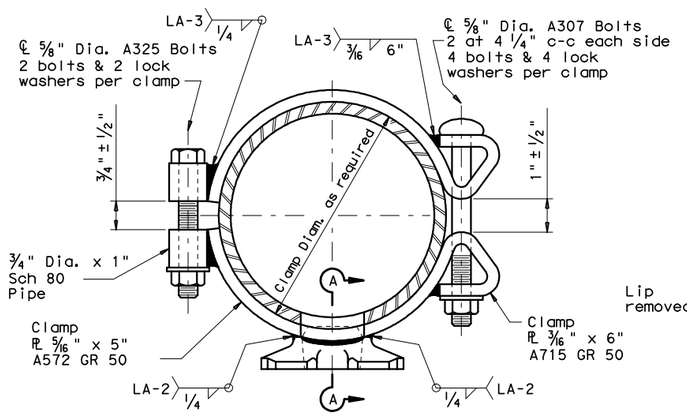

CLAMP ATTACHMENT DETAIL NO. 3
(HALF SECTION)

CLAMP ATTACHMENT DETAIL NO. 4
(HALF SECTION)

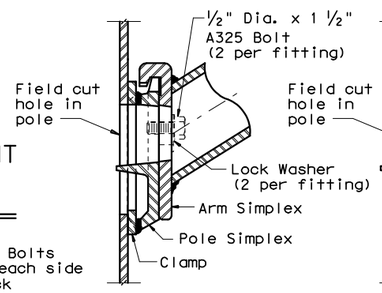

UPPER SIMPLEX FITTING

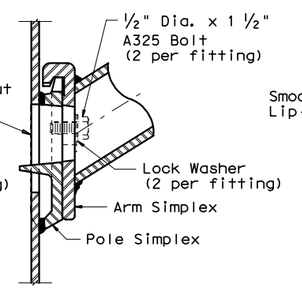

UPPER SIMPLEX FITTING

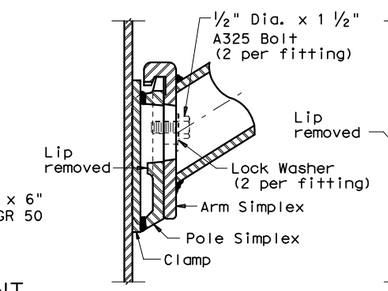

LOWER SIMPLEX FITTING

SECTON A-A

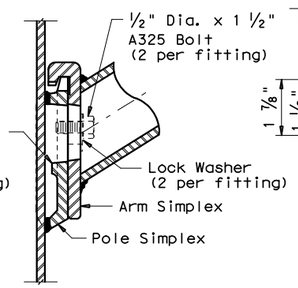

LOWER SIMPLEX FITTING

SECTON B-B

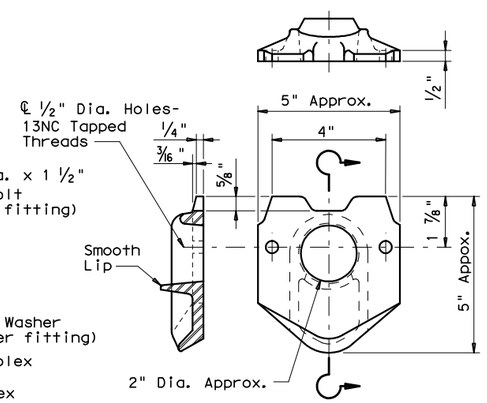

POLE SIMPLEX DETAIL

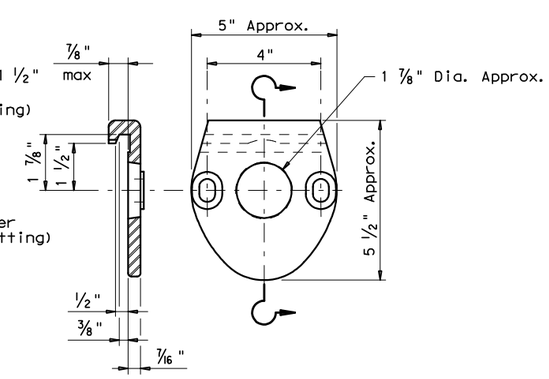

ARM SIMPLEX DETAIL

MATERIALS	
Pole or Arm Simplex	ASTM A27 Gr.65-35 or A148 Gr.80-50, A576 Gr.1021 ③, or A36 (Arm only)
Arm Pipes	ASTM A53 Gr.B, A501, A1008 HSLAS-F Gr.50 ④, or A1011 HSLAS-F Gr.50 ④
Arm Strut Plates ②	ASTM A36, A572 Gr.50 ④, or A588
Misc.	ASTM designations as noted

① Dimensional limits are given to show acceptable variation in design. All of a Fabricator's production of a particular arm length shall have the same dimensions within specified tolerances.

② Any of the materials listed for plates may be used where the drawings do not specify a particular ASTM designation.

③ A576 must be suitable for forging and also meet minimum tensile strength of 65 ksi, minimum yield of 35 ksi, and elongation in 2 inches of 22 percent.

④ ASTM A572, A1008 HSLAS-F, and A1011 HSLAS-F may have higher yield strengths but shall not have less elongation than the grade indicated.

GENERAL NOTES:

Design conforms to 1994 AASHTO Standard Specifications for Structural Supports for Highway Signs, Luminaires, and Traffic Signals and Interim Revisions thereto. Design Wind Speed equals 90 mph plus a 1.3 gust factor. Arms are designed to support a 60 lb. luminaire having an effective projected area (actual area times drag coefficient) of 1.6 sq. ft.

Materials and fabrication shall be in accordance with Item 686, "Traffic Signal Pole Assemblies (Steel)" and with the details, dimensions, and weld procedures shown herein. Weld references call for preapproved weld procedures which the Fabricator must obtain prior to fabrication. In the absense of specified Fabricaton tolerances, dimensions shall be within the tolerances generally obtainable in normal fabrication practice.

Unless otherwise noted, all parts shall be galvanized after fabrication in accordance with Item 445, "Galvanizing".

Deviation from the details and dimensions shown herein require submission of shop drawings in accordance with Item 441, "Steel Structures". Alternate designs are not acceptable.

Each pole simplex fitting shall be supplied with 2 ASTM A325 bolts and 2 lock washers of the size specified. The bolts and lock washers shall be secured to the pole with the other hardware items called for in the plans. When clamp attachment is specified, the Fabricator shall ship the clamp assembly securely attached to the pole at the location shown on the plans.

If clamp assemblies are ordered without poles, the Fabricator shall ship one upper and one lower clamp assembly together in a single package, including all nuts and washers required for the clamps and simplex fittings.

Texas Department of Transportation
Traffic Operations Division

STANDARD ASSEMBLY DRAWINGS FOR LUMINAIRE SUPPORT STRUCTURES

ARM DETAILS

LUM-A-12

© TxDOT August 1995

DN: LEH	CK: JSY	DW: LTT	CK: TEB

REVISIONS: 5-96, 1-99, 1-12

CONT	SECT	JOB	HIGHWAY
0922	33	076	CS
DIST		COUNTY	SHEET NO.
LRD		WEBB	150

DATE:
FILE:

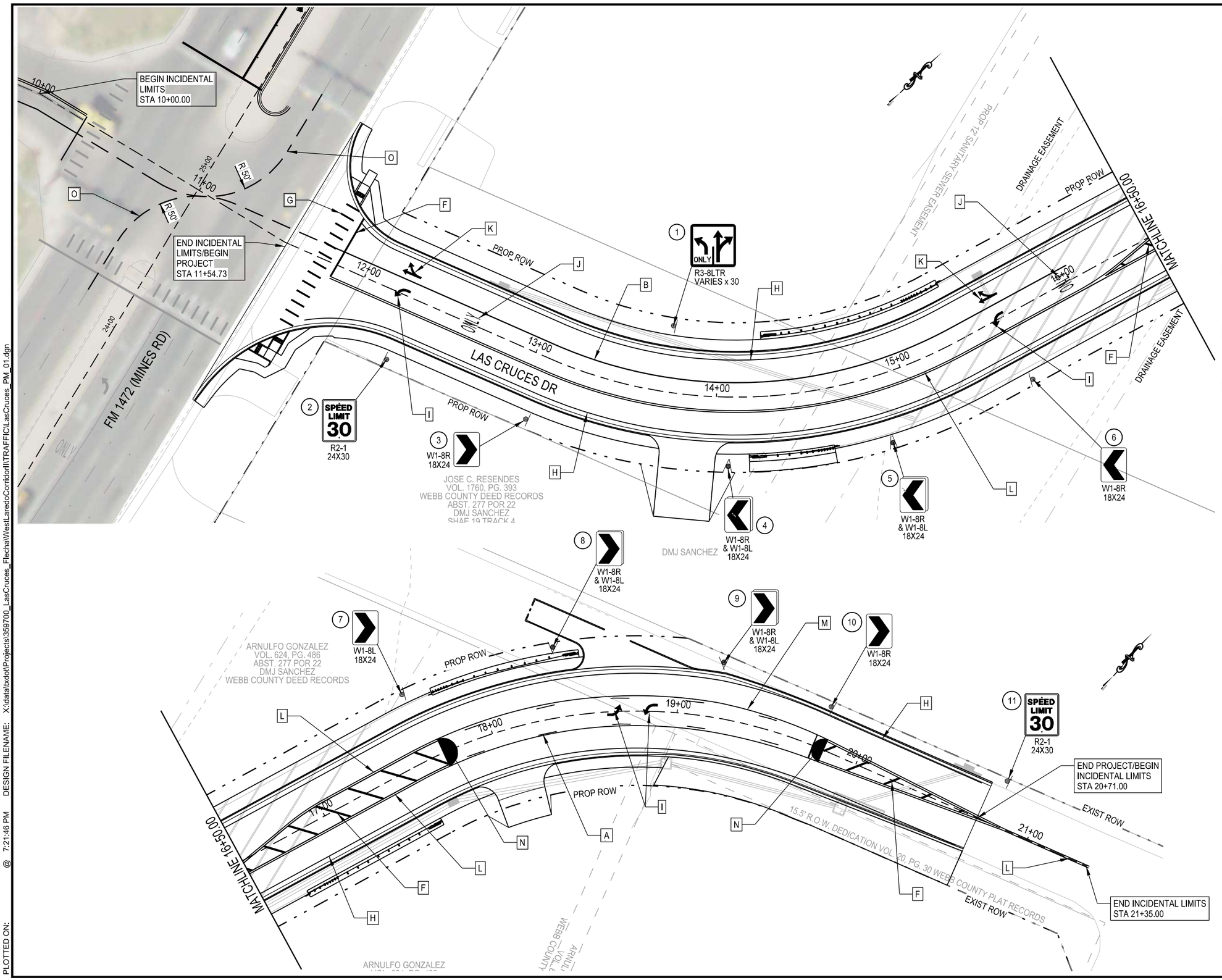

PAVEMENT MARKING LEGEND

- A — REFL PAV MRK TY I (Y) 6" (BRK) WITH REFL PAV MRKR TY II-AA @ 40' O.C.
- B — REFL PAV MRK TY I (W) 8" (SLD) WITH REFL PAV MRKR TY I-C @ 20' O.C.
- C — REFL PAV MRK TY I (W) 8" (SLD)
- D — REFL PAV MRK TY I (W) 6" (DOT) 2' LINE @ 8' O.C.
- E — REFL PAV MRK TY I (W) 12" (SLD) (DIAGONALS)
- F — REFL PAV MRK TY I (W or Y) 24" (SLD) (STOP BAR / DIAGONALS)
- G — REFL PAV MRK TY I (W) 24" (SLD) (CROSSWALK)
- H — REFL PAV MRK TY I (W) 6" (SLD)
- I — REFL PAV MRK TY I (W) (ARROW)
- J — REFL PAV MRK TY I (W) (WORD)
- K — REF PAV MRK TY I (W) (DBL ARROW)
- L — REFL PAV MRK TY I (Y) 6" (DBL) (SLD) WITH REFL PAV MRKR TY II-AA @ 20' O.C.
- M — REFL PAV MRK TY I (Y) 6" (SLD)
- N — REFL PAV MRK TY I (Y) (MED NOSE) WITH REFL PAV MRKR TY II-AA @ 2' O.C.
- O — REFL PAV MRK TY I (W) 8" (DOT)(100MIL)

GRAPHIC SCALE (IN FEET)
25 12.5 0 25 50 75
1" = 50'

STATE OF TEXAS
KYLE GASS
94833
LICENSED
PROFESSIONAL ENGINEER

KYLE GASS, P.E.
2/27/2025

LAS CRUCES REALIGNMENT

SIGNING & PAVEMENT MARKING LAYOUT

SHEET 1 OF 4

KCI TECHNOLOGIES, INC.
2806 W. BITTERS RD. - SUITE 218
SAN ANTONIO, TX 78248 - 210.641.9999
TEXAS REGISTERED ENGINEERING FIRM
TBPE FIRM No. F-10573
www.kci.com

© 2024 Texas Department of Transportation

FED.RD. DIV.NO.	FEDERAL AID PROJECT NO.		SHEET NO.
6	DMO 2012 (628)		151
STATE	DIST.	COUNTY	
TEXAS	LRD	WEBB	
CONT.	SECT.	JOB	HIGHWAY NO.
0922	33	076	CS

PLOTTED ON: @ 7:21:46 PM DESIGN FILENAME: X:\data\txdot\Projects\359700_LasCruces_FlechaWestLaredoCorridor\TRAFFIC\LasCruces_PM_01.dgn

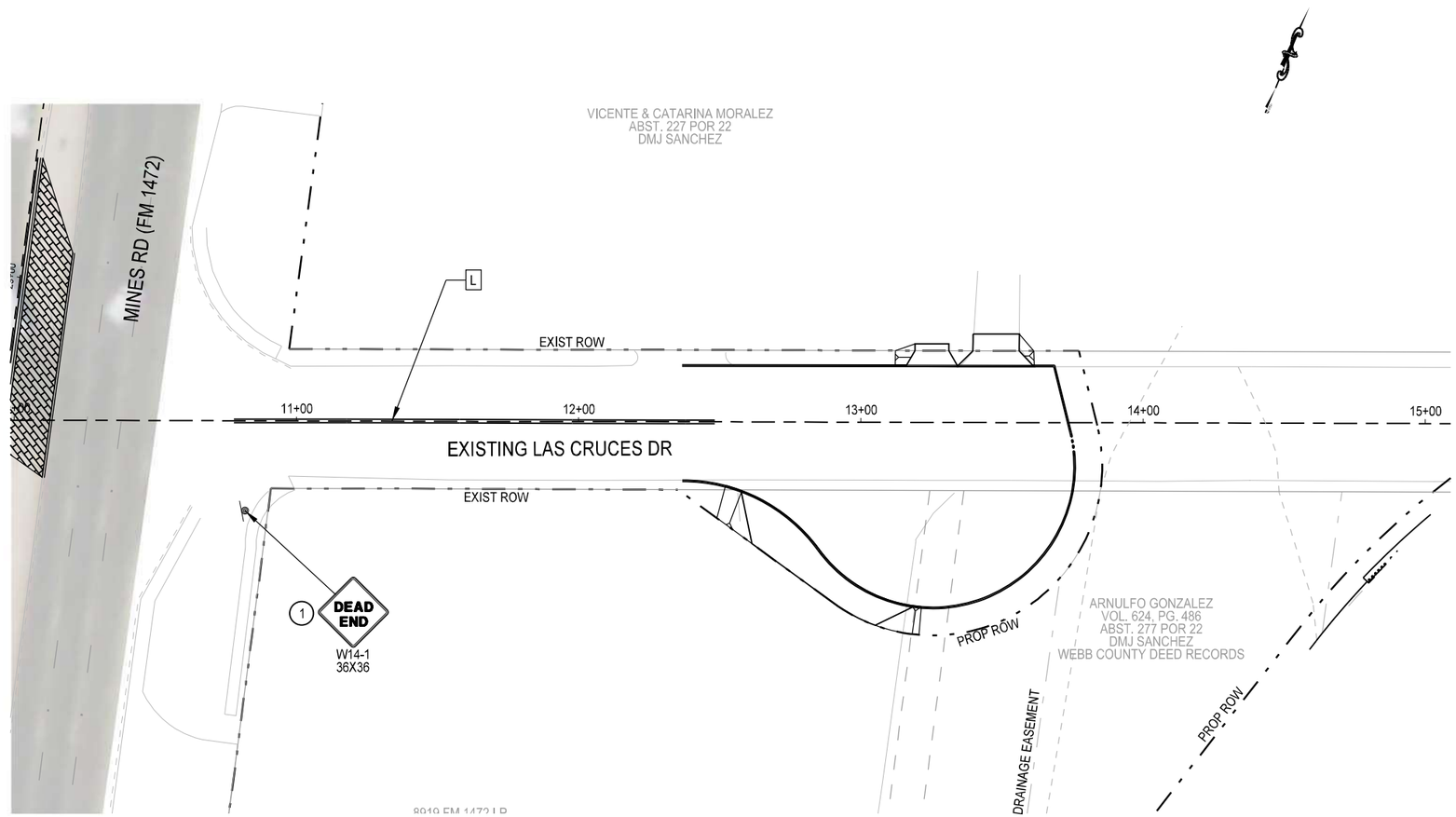

PAVEMENT MARKING LEGEND

A	REFL PAV MRK TY I (Y) 6" (BRK) WITH REFL PAV MRKR TY II-AA @ 40' O.C.
B	REFL PAV MRK TY I (W) 8" (SLD) WITH REFL PAV MRKR TY I-C @ 20' O.C.
C	REFL PAV MRK TY I (W) 8" (SLD)
D	REFL PAV MRK TY I (W) 6" (DOT) 2' LINE @ 8' O.C.
E	REFL PAV MRK TY I (W) 12" (SLD) (DIAGONALS)
F	REFL PAV MRK TY I (W or Y) 24" (SLD) (STOP BAR / DIAGONALS)
G	REFL PAV MRK TY I (W) 24" (SLD) (CROSSWALK)
H	REFL PAV MRK TY I (W) 6" (SLD)
I	REFL PAV MRK TY I (W) (ARROW)
J	REFL PAV MRK TY I (W) (WORD) ONLY
K	REF PAV MRK TY I (W) (DBL ARROW)
L	REFL PAV MRK TY I (Y) 6" (DBL) (SLD) WITH REFL PAV MRKR TY II-AA @ 20' O.C.
M	REFL PAV MRK TY I (Y) 6" (SLD)
N	REFL PAV MRK TY I (Y) (MED NOSE) WITH REFL PAV MRKR TY II-AA @ 2' O.C.
O	REFL PAV MRK TY I (W) 8" (DOT)(100MIL)

GRAPHIC SCALE
(IN FEET)
25 12.5 0 25 50 75
1" = 50'

STATE OF TEXAS
KYLE GASS
94833
LICENSED
PROFESSIONAL ENGINEER

KYLE GASS, P.E.
2/27/2025

LAS CRUCES REALIGNMENT

SIGNING & PAVEMENT MARKING LAYOUT

SHEET 2 OF 4

KCI TECHNOLOGIES, INC.
2806 W. BITTERS RD. - SUITE 218
SAN ANTONIO, TX 78248 - 210.641.9999
TEXAS REGISTERED ENGINEERING FIRM
TBPE FIRM No. F-10573
www.kci.com

© 2024 Texas Department of Transportation

FED.RD. DIV.NO.	FEDERAL AID PROJECT NO.		SHEET NO.
6	DMO 2012 (628)		152
STATE	DIST.	COUNTY	
TEXAS	LRD	WEBB	
CONT.	SECT.	JOB	HIGHWAY NO.
0922	33	076	CS

PLOTTED ON: @ 7:22:07 PM DESIGN FILENAME: X:\data\txdot\Projects\359700_LasCruces_Flecha\WestLaredoCorridor\TRAFFIC\LasCruces_PM_02.dgn

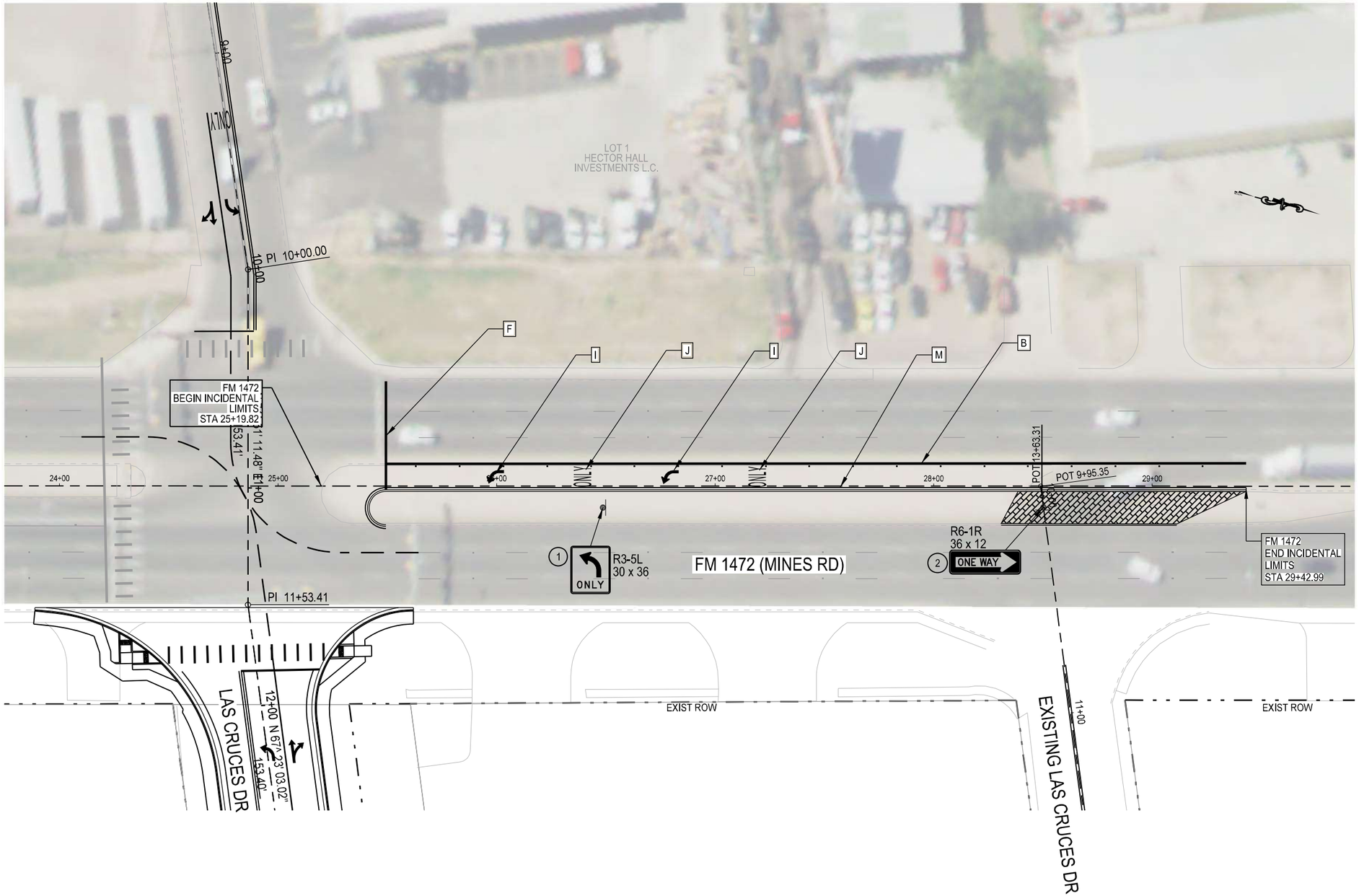

PAVEMENT MARKING LEGEND

A	REFL PAV MRK TY I (Y) 6" (BRK) WITH REFL PAV MRKR TY II-AA @ 40' O.C.
B	REFL PAV MRK TY I (W) 8" (SLD) WITH REFL PAV MRKR TY I-C @ 20' O.C.
C	REFL PAV MRK TY I (W) 8" (SLD)
D	REFL PAV MRK TY I (W) 6" (DOT) 2' LINE @ 8' O.C.
E	REFL PAV MRK TY I (W) 12" (SLD) (DIAGONALS)
F	REFL PAV MRK TY I (W or Y) 24" (SLD) (STOP BAR / DIAGONALS)
G	REFL PAV MRK TY I (W) 24" (SLD) (CROSSWALK)
H	REFL PAV MRK TY I (W) 6" (SLD)
I	REFL PAV MRK TY I (W) (ARROW)
J	ONLY REFL PAV MRK TY I (W) (WORD)
K	REF PAV MRK TY I (W) (DBL ARROW)
L	REFL PAV MRK TY I (Y) 6" (DBL) (SLD) WITH REFL PAV MRKR TY II-AA @ 20' O.C.
M	REFL PAV MRK TY I (Y) 6" (SLD)
N	REFL PAV MRK TY I (Y) (MED NOSE) WITH REFL PAV MRKR TY II-AA @ 2' O.C.
O	REFL PAV MRK TY I (W) 8" (DOT)(100MIL)

GRAPHIC SCALE
(IN FEET)
25 12.5 0 25 50 75
1" = 50'

STATE OF TEXAS
KYLE GASS
94833
LICENSED
PROFESSIONAL ENGINEER

KYLE GASS, P.E.
2/27/2025

LAS CRUCES REALIGNMENT

SIGNING & PAVEMENT
MARKING LAYOUT

SHEET 3 OF 4

KCI TECHNOLOGIES, INC.
2806 W. BITTERS RD. - SUITE 218
SAN ANTONIO, TX 78248 - 210.641.9999
TEXAS REGISTERED ENGINEERING FIRM
TBPE FIRM No. F-10573
www.kci.com

© 2024 Texas Department of Transportation

FED.RD. DIV.NO.	FEDERAL AID PROJECT NO.		SHEET NO.
6	DMO 2012 (628)		153
STATE	DIST.	COUNTY	
TEXAS	LRD	WEBB	
CONT.	SECT.	JOB	HIGHWAY NO.
0922	33	076	CS

PLOTTED ON: @ 7:22:13 PM DESIGN FILENAME: X:\data\txdot\Projects\359700_LasCruces_Flecha\WestLaredoCorridor\TRAFFIC\LasCruces_PM_03.dgn

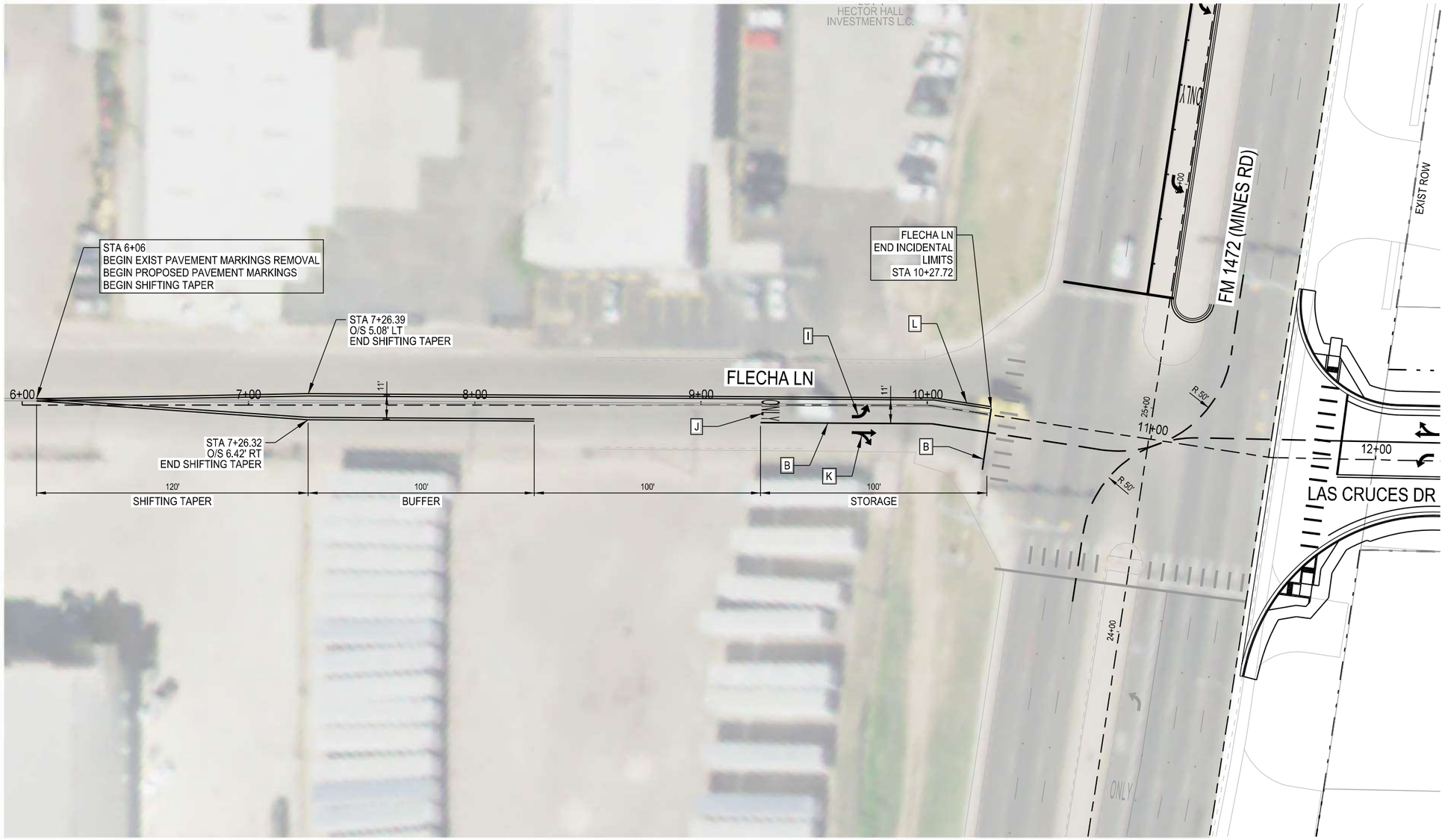

PAVEMENT MARKING LEGEND

A	REFL PAV MRK TY I (Y) 6" (BRK) WITH REFL PAV MRKR TY II-AA @ 40' O.C.
B	REFL PAV MRK TY I (W) 8" (SLD) WITH REFL PAV MRKR TY I-C @ 20' O.C.
C	REFL PAV MRK TY I (W) 8" (SLD)
D	REFL PAV MRK TY I (W) 6" (DOT) 2' LINE @ 8' O.C.
E	REFL PAV MRK TY I (W) 12" (SLD) (DIAGONALS)
F	REFL PAV MRK TY I (W or Y) 24" (SLD) (STOP BAR / DIAGONALS)
G	REFL PAV MRK TY I (W) 24" (SLD) (CROSSWALK)
H	REFL PAV MRK TY I (W) 6" (SLD)
I	REFL PAV MRK TY I (W) (ARROW)
J	REFL PAV MRK TY I (W) (WORD)
K	REF PAV MRK TY I (W) (DBL ARROW)
L	REFL PAV MRK TY I (Y) 6" (DBL) (SLD) WITH REFL PAV MRKR TY II-AA @ 20' O.C.
M	REFL PAV MRK TY I (Y) 6" (SLD)
N	REFL PAV MRK TY I (Y) (MED NOSE) WITH REFL PAV MRKR TY II-AA @ 2' O.C.
O	REFL PAV MRK TY I (W) 8" (DOT)(100MIL)

GRAPHIC SCALE
(IN FEET)
25 12.5 0 25 50 75
1" = 50'

STATE OF TEXAS
KYLE GASS
94833
LICENSED
PROFESSIONAL ENGINEER

KYLE GASS, P.E.
2/27/2025

LAS CRUCES REALIGNMENT

SIGNING & PAVEMENT
MARKING LAYOUT

SHEET 4 OF 4

KCI TECHNOLOGIES, INC.
2806 W. BITTERS RD. - SUITE 218
SAN ANTONIO, TX 78248 - 210.641.9999
TEXAS REGISTERED ENGINEERING FIRM
TBPE FIRM No. F-10573
www.kci.com

© 2024 Texas Department of Transportation

FED.RD. DIV.NO.	FEDERAL AID PROJECT NO.		SHEET NO.
6	DMO 2012 (628)		154
STATE	DIST.	COUNTY	
TEXAS	LRD	WEBB	
CONT.	SECT.	JOB	HIGHWAY NO.
0922	33	076	CS

PLOTTED ON: @ 7:22:38 PM DESIGN FILENAME: X:\data\txdot\Projects\359700_LasCruces_FlechaWestLaredoCorridor\TRAFFIC\LasCruces_PM_04.dgn

DISCLAIMER: The use of this standard is governed by the "Texas Engineering Practice Act". No warranty of any kind is made by TxDOT for any purpose whatsoever. TxDOT assumes no responsibility for the conversion of this standard to other formats or for incorrect results or damages resulting from its use.

SIGN SUPPORT DESCRIPTIVE CODES

(Descriptive Codes correspond to project estimate and quantities sheets)

SM RD SGN ASSM TY XXXXX(X)XX(X-XXXX)

Post Type

- FRP = Fiberglass Reinforced Plastic Pipe (see SMD(FRP))
- TWT = Thin-Walled Tubing (see SMD(TWT))
- 10BWG = 10 BWG Tubing (see SMD(SLIP-1) to (SLIP-3))
- S80 = Schedule 80 Pipe (see SMD(SLIP-1) to (SLIP-3))

Number of Posts (1 or 2)

Anchor Type

- UA = Universal Anchor - Concreted (see SMD(FRP) and (TWT))
- UB = Universal Anchor - Bolted down (see SMD(FRP) and (TWT))
- WS = Wedge Anchor Steel - (see SMD(TWT))
- WP = Wedge Anchor Plastic (see SMD(TWT))
- SA = Slipbase - Concreted (see SMD(SLIP-1) to (SLIP-3))
- SB = Slipbase - Bolted Down (see SMD(SLIP-1) to (SLIP-3))

Sign Mounting Designation

- P = Prefab. "Plain" (see SMD(SLIP-1) to (SLIP-3), (TWT), (FRP))
- T = Prefab. "T" (see SMD(SLIP-1) to (SLIP-3), (TWT))
- U = Prefab. "U" (see SMD(SLIP-1) to (SLIP-3))
- IF REQUIRED
- 1EXT or 2EXT = Number of Extensions (see SMD(SLIP-1) to (SLIP-3), (TWT))
- BM = Extruded Wind Beam (see SMD(SLIP-1) to (SLIP-3))
- WC = 1.12 #/ft Wing Channel (see SMD(SLIP-1) to (SLIP-3))
- EXAL = Extruded Aluminum Sign Panels (see SMD(SLIP-3))

REQUIRED CLEARANCE FOR BREAKAWAY SUPPORT

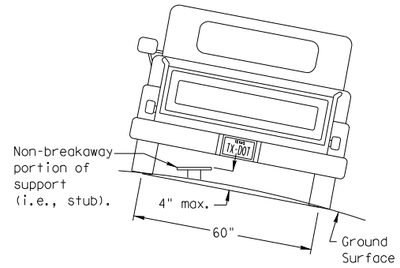

To avoid vehicle undercarriage snagging, any substantial remains of a breakaway support, when it is broken away, should not project more than 4 inches above a 60-inch chord (i.e., typical space between wheel paths).

SIGN LOCATION

PAVED SHOULDERS

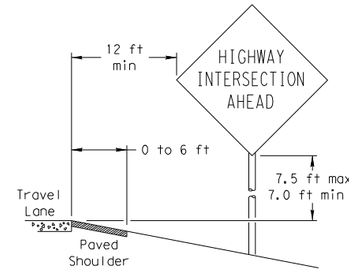

LESS THAN 6 FT. WIDE

When the shoulder is 6 ft. or less in width, the sign must be placed at least 12 ft. from the edge of the travel lane.

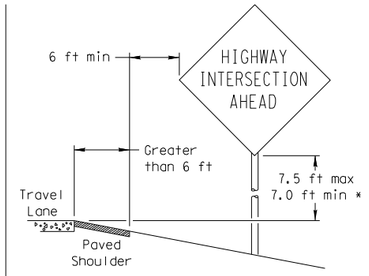

GREATER THAN 6 FT. WIDE

When the shoulder is greater than 6 ft in width, the sign must be placed at least 6 ft. from the edge of the shoulder.

T-INTERSECTION

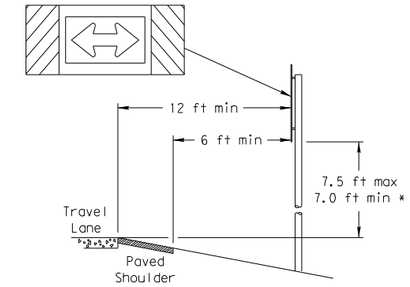

When this sign is needed at the end of a two-lane, two way roadway, the right edge of the sign should be in line with the centerline of the roadway. Place as close to ROW as practical.

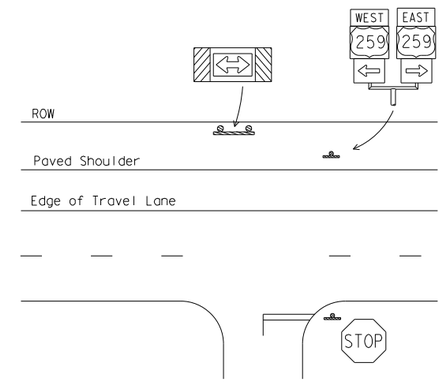

BEHIND BARRIER

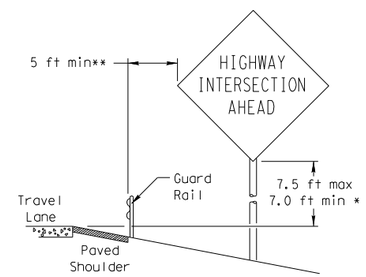

BEHIND GUARDRAIL

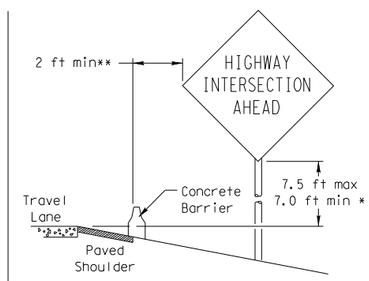

BEHIND CONCRETE BARRIER

**Sign clearance based on distance required for proper guard rail or concrete barrier performance.

* Signs shall be mounted using the following condition that results in the greatest sign elevation:

(1) a minimum of 7 to a maximum of 7.5 feet above the edge of the travel lane or

(2) a minimum of 7 to a maximum of 7.5 feet above the grade at the base of the support when sign is installed on the backslope.

The maximum values may be increased when directed by the Engineer.

See the Traffic Operations Division website for detailed drawings of sign clamps, Triangular Slipbase System components and Wedge Anchor System components.

The website address is:
http://www.txdot.gov/publications/traffic.htm

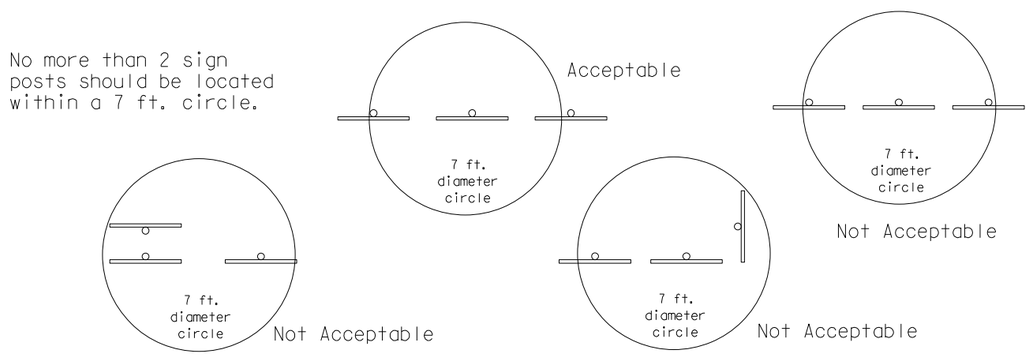

TYPICAL SIGN ATTACHMENT DETAIL

Single Signs

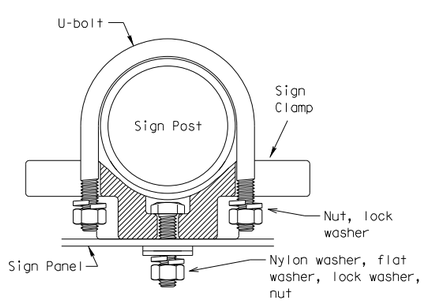

Bolts used to mount sign panels to the clamp are 5/16-18 UNC galvanized square head with nut, nylon washer, flat washer and lock washer. The bolt length is 1 inch for aluminum.

When two sign clamps are used to mount signs back-to-back, use a 5/16-18 UNC galvanized hex head per ASTM A307 with nut and helical-spring lock washer. The approximate bolt lengths for various post sizes and sign clamp types are given in the table at right. The bolt length may need to be adjusted depending upon field conditions.

Sign clamps may be either the specific size clamp or the universal clamp.

Back-to-Back Signs

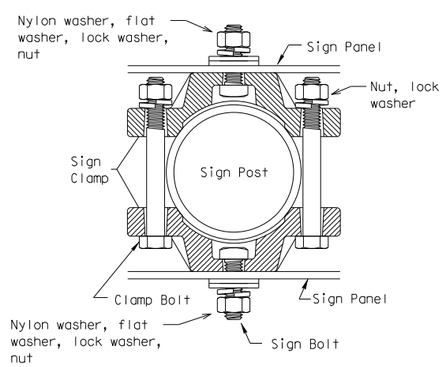

Pipe Diameter	Approximate Bolt Length	
	Specific Clamp	Universal Clamp
2" nominal	3"	3 or 3 1/2"
2 1/2" nominal	3 or 3 1/2"	3 1/2 or 4"
3" nominal	3 1/2 or 4"	4 1/2"

SIGNS WITH PLAQUES

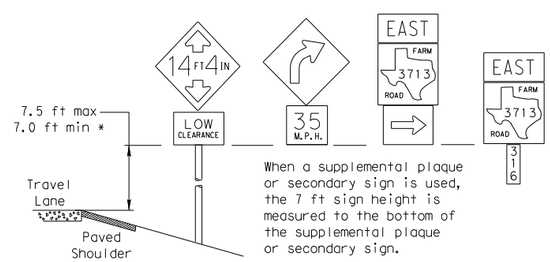

When a supplemental plaque or secondary sign is used, the 7 ft sign height is measured to the bottom of the supplemental plaque or secondary sign.

CURB & GUTTER OR RAISED ISLAND

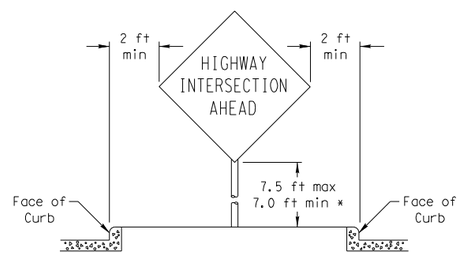

RESTRICTED RIGHT-OF-WAY

(When 6 ft min. is not possible.)

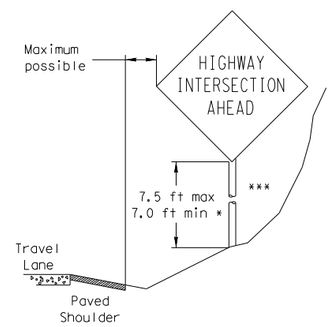

Right-of-way restrictions may be created by rocks, water, vegetation, forest, buildings, a narrow island, or other factors.

In situations where a lateral restriction prevents the minimum horizontal clearance from the edge of the travel lane, signs should be placed as far from the travel lane as practical.

*** Post may be shorter if protected by guardrail or if Engineer determines the post could not be hit due to extreme slope.

Texas Department of Transportation
Traffic Operations Division

SIGN MOUNTING DETAILS SMALL ROADSIDE SIGNS GENERAL NOTES & DETAILS

SMD(GEN)-08

©TxDOT July 2002

9-08 REVISIONS

DN: TXDOT	CK: TXDOT	DW: TXDOT	CK: TXDOT
CONT	SECT	JOB	HIGHWAY
0922	33	076	CS
DIST		COUNTY	SHEET NO.
LRD		WEBB	155

26A

DATE:
FILE:

DISCLAIMER: The use of this standard is governed by the "Texas Engineering Practice Act". No warranty of any kind is made by TxDOT for any purpose whatsoever. TxDOT assumes no responsibility for the conversion of this standard to other formats or for incorrect results or damages resulting from its use.

TRIANGULAR SLIPBASE INSTALLATION GENERAL REQUIREMENTS

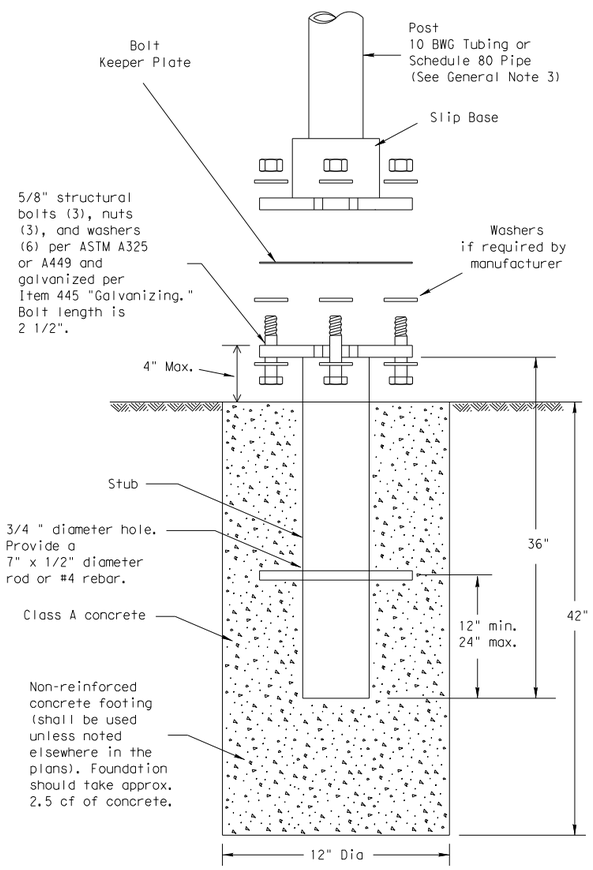

SM RD SGN ASSM TY XXXXX(X)SA(X-XXXX)

NOTE

There are various devices approved for the Triangular Slipbase System. Please reference the Material Producer List for approved slip base systems. http://www.txdot.gov/business/producer_list.htm The devices shall be installed per manufacturers' recommendations. Installation procedures shall be provided to the Engineer by Contractor.

GENERAL NOTES:

1. Slip base shall be permanently marked to indicate manufacturer. Method, design, and location of marking are subject to approval of the TxDOT Traffic Standards Engineer.
2. Material used as post with this system shall conform to the following specifications:
   10 BWG Tubing (2.875" outside diameter)
   - 0.134" nominal wall thickness
   - Seamless or electric-resistance welded steel tubing or pipe
   - Steel shall be HSLAS Gr 55 per ASTM A1011 or ASTM A1008
   - Other steels may be used if they meet the following:
     - 55,000 PSI minimum yield strength
     - 70,000 PSI minimum tensile strength
     - 20% minimum elongation in 2"
   - Wall thickness (uncoated) shall be within the range of 0.122" to 0.138"
   - Outside diameter (uncoated) shall be within the range of 2.867" to 2.883"
   - Galvanization per ASTM A123 or ASTM A653 G210. For precoated steel tubing (ASTM A653), recoat tube outside diameter weld seam by metallizing with zinc wire per ASTM B833.

   Schedule 80 Pipe (2.875" outside diameter)
   - 0.276" nominal wall thickness
   - Steel tubing per ASTM A500 Gr C
   - Other seamless or electric-resistance welded steel tubing or pipe with equivalent outside diameter and wall thickness may be used if they meet the following:
     - 46,000 PSI minimum yield strength
     - 62,000 PSI minimum tensile strength
     - 21% minimum elongation in 2"
   - Wall thickness (uncoated) shall be within the range of 0.248" to 0.304"
   - Outside diameter (uncoated) shall be within the range of 2.855" to 2.895"
   - Galvanization per ASTM A123
3. See the Traffic Operations Division website for detailed drawings of sign clamps and Texas Universal Triangular Slipbase System components. The website address is:
   http://www.txdot.gov/publications/traffic.htm
4. Sign supports shall not be spliced except where shown. Sign support posts shall not be spliced.

ASSEMBLY PROCEDURE

Foundation

1. Prepare 12-inch diameter by 42-inch deep hole. If solid rock is encountered, the depth of the foundation may be reduced such that it is embedded a minimum of 18 inches into the solid rock.
2. The Engineer may permit batches of concrete less than 2 cubic yards to be mixed with a portable, motor-driven concrete mixer. For small placements less than 0.5 cubic yards, hand mixing in a suitable container may be allowed by Engineer. Concrete shall be Class A.
3. Push the pipe end of the slip base stub into the center of the concrete. Rotate the stub back and forth while pushing it down into the concrete to assure good contact between the concrete and stub. Continue to work the stub into the concrete until it is between 2 to 4 inches above the ground.
4. Plumb the stub. Allow a minimum of 4 days to set, unless otherwise directed by the Engineer.
5. The triangular slipbase system is multidirectional and is designed to release when struck from any direction.

Support

1. Cut support so that the bottom of the sign will be 7 to 7.5 feet above the edge of the travelway (i.e., edge of the closest lane) when slip plate is below the edge of pavement or 7 to 7.5 feet above slip plate when the slip plate is above the edge of the travelway. The cut shall be plumb and straight.
2. Attach sign to support using connections shown. When multiple signs are installed on the same support, ensure the minimum clearance between each sign is maintained. See SMD(SLIP-2) for clearances based on sign types.

CONCRETE ANCHOR

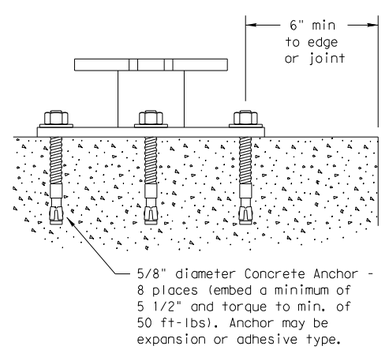

SM RD SGN ASSM TY XXXXX(X)SB(X-XXXX)

Concrete anchor consists of 5/8" diameter stud bolt with UNC series bolt threads on the upper end. Heavy hex nut per ASTM A563, and hardened washer per ASTM F436. The stud bolt shall have a minimum yield and ultimate tensile strength of 50 and 75 KSI, respectively. Nuts, bolts and washers shall be galvanized per Item 445, "Galvanizing." Adhesive type anchors shall have stud bolts installed with Type III epoxy per DMS-6100, "Epoxies and Adhesives." Adhesive anchors may be loaded after adequate epoxy cure time per the manufacturer's recommendations. Top of bolt shall extend at least flush with top of the nut when installed. The anchor, when installed in 4000 psi normal-weight concrete with a 5 1/2" minimum embedment, shall have a minimum allowable tension and shear of 3900 and 3100 psi, respectively.

Texas Department of Transportation
Traffic Operations Division

SIGN MOUNTING DETAILS
SMALL ROADSIDE SIGNS
TRIANGULAR SLIPBASE SYSTEM

SMD(SLIP-1)-08

©TxDOT July 2002

DN: TXDOT	CK: TXDOT	DW: TXDOT	CK: TXDOT

REVISIONS 9-08

CONT	SECT	JOB	HIGHWAY
0922	33	076	CS

DIST	COUNTY	SHEET NO.
LRD	WEBB	156

DATE:
FILE:

DISCLAIMER: The use of this standard is governed by the "Texas Engineering Practice Act". No warranty of any kind is made by TxDOT for any purpose whatsoever. TxDOT assumes no responsibility for the conversion of this standard to other formats or for incorrect results or damages resulting from its use.

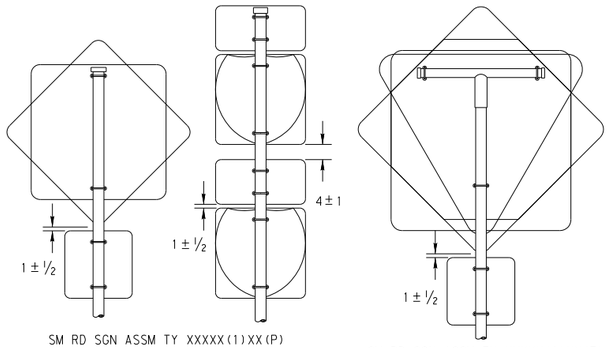

SM RD SGN ASSM TY XXXXX(1)XX(P)

SM RD SGN ASSM TY XXXXX(1)XX(T)

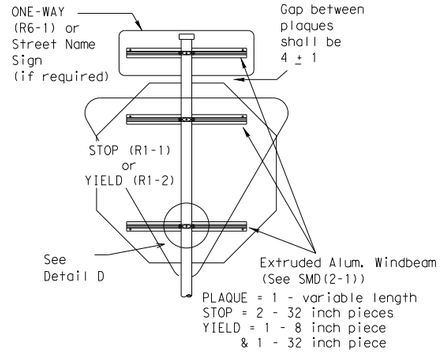

SM RD SGN ASSM TY XXXXX(1)XX(P-BM)

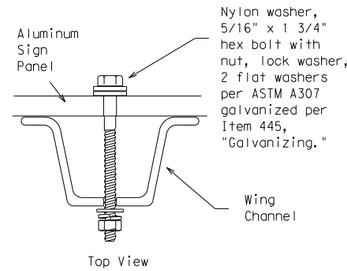

Detail A

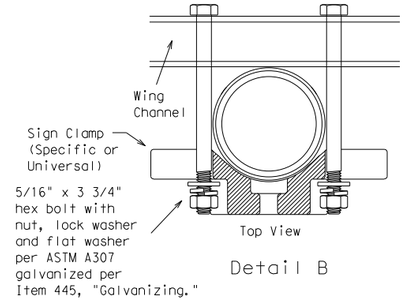

Detail B

GENERAL NOTES:

1.

SIGN SUPPORT	# OF POSTS	MAX. SIGN AREA
10 BWG	1	16 SF
10 BWG	2	32 SF
Sch 80	1	32 SF
Sch 80	2	64 SF

2. The Engineer may require that a Schedule 80 post be used in place of a 10 BWG where a sign height is abnormally high due to a fill slope.
3. Sign supports shall not be spliced except where shown. Sign support posts shall not be spliced.
4. Aluminum sign blanks shall conform to Departmental Material Specifications DMS-7110 and shall have the following minimum thicknesses: 0.080 for signs less than 7.5 sq. ft., 0.100 for signs 7.5 to 15 sq. ft., and 0.125 for signs greater than 15 sq. ft.
5. Signs that require specific supports due to reasons in addition to windloading are indicated on the "REQUIRED SUPPORT" table on this sheet.
6. For horizontal rectangular signs fabricated from flat aluminum, T-brackets are used for signs 24 inches or less in height. U-brackets are used for signs of greater height.
7. When two triangular slipbase supports are used to support a single sign, they shall not be "rigidly" connected to each other except through the sign panel. This will allow each support to act independently when impacted by an errant vehicle.
8. Wing channel shall meet ASTM A 1011 SS Gr 50 and be galvanized per ASTM A 123.
9. Excess pipe, wing channel, or windbeam shall be cut off so that it does not extend beyond the sign panel (i.e., excess support shall not be visible when the sign is viewed from the front.) Repair galvanized coating at cut support ends per Item 445, "Galvanizing."
10. Additional route markers may be added vertically, provided the total sign area does not exceed the maximum allowable amount per Note 1.
11. Additional sign clamp required on the "T-bracket" post for 24 inch height signs. Place the clamp 3 inches above bottom of sign when possible.
12. Post open ends shall be fitted with Friction Caps.
13. Sign blanks shall be the sizes and shapes shown on the plans.

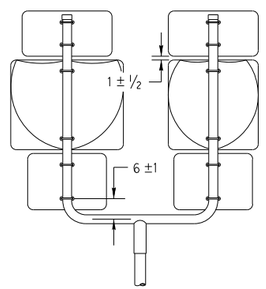

SM RD SGN ASSM TY XXXXX(1)XX(U)

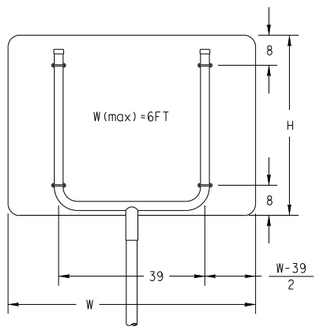

SM RD SGN ASSM TY XXXXX(1)XX(U)

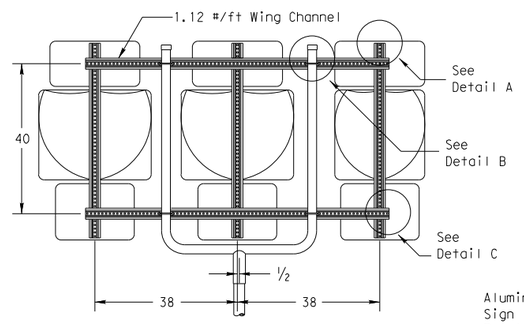

SM RD SGN ASSM TY XXXXX(1)XX(U-WC)
(See Note 11)

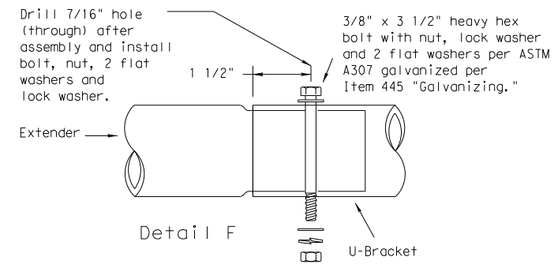

Detail F

Splices shall only be allowed behind the sign substrate.

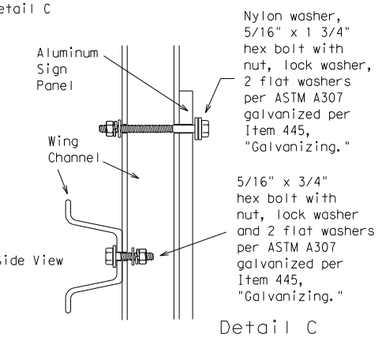

Detail C

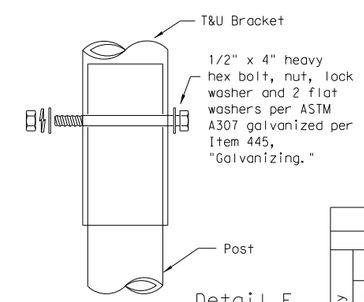

Detail E

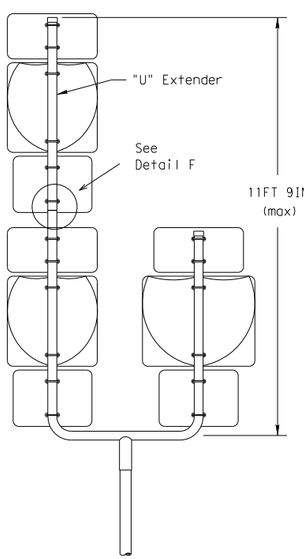

SM RD SGN ASSM TY S80(1)XX(U-1EXT)

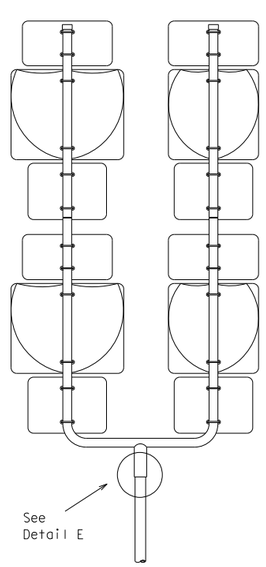

SM RD SGN ASSM TY S80(1)XX(U-2EXT)

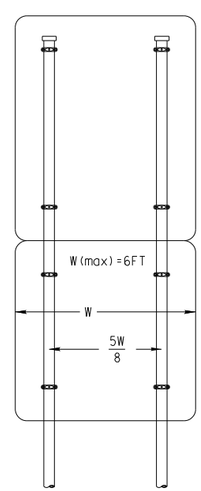

SM RD SGN ASSYM TY XXXXX(2)XX(P)

SIDE VIEW

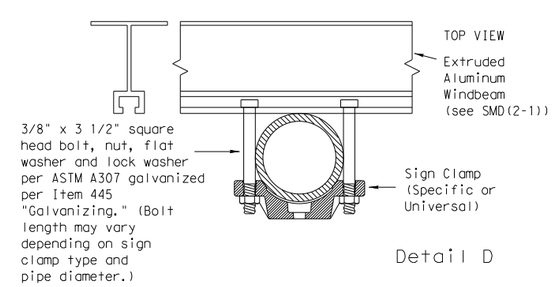

Detail D

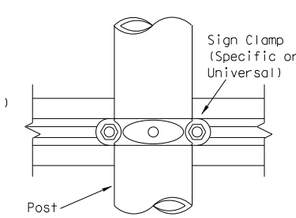

REQUIRED SUPPORT

	SIGN DESCRIPTION	SUPPORT
Regulatory	48-inch STOP sign (R1-1)	TY 10BWG(1)XX(T) TY 10BWG(1)XX(P-BM)
Regulatory	60-inch YIELD sign (R1-2)	TY 10BWG(1)XX(T) TY 10BWG(1)XX(P-BM)
Regulatory	48x16-inch ONE-WAY sign (R6-1)	TY 10BWG(1)XX(T) TY 10BWG(1)XX(P-BM)
Regulatory	36x48, 48x36, and 48x48-inch signs	TY 10BWG(1)XX(T)
Regulatory	48x60-inch signs	TY S80(1)XX(T)
Warning	48x48-inch signs (diamond or square)	TY 10BWG(1)XX(T)
Warning	48x60-inch signs	TY S80(1)XX(T)
Warning	48-inch Advance School X-ing sign (S1-1)	TY 10BWG(1)XX(T)
Warning	48-inch School X-ing sign (S2-1)	TY 10BWG(1)XX(T)
Warning	Large Arrow sign (W1-6 & W1-7)	TY 10BWG(1)XX(T)

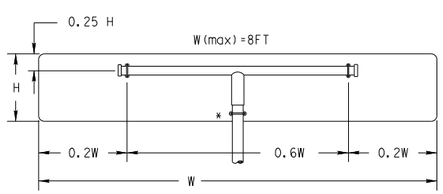

All dimensions are in english unless detailed otherwise.

SM RD SGN ASSM TY XXXXX(1)XX(T)
(* - See Note 12)

FRICTION CAP DETAIL

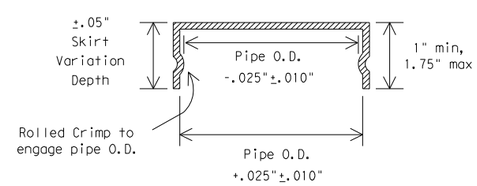

Friction caps may be manufactured from hot rolled or cold rolled steel sheets. The minimum sheet metal thickness shall be 24 gauge for all cap sizes.

The rim edges shall be reasonably straight and smooth. Caps shall be sized and formed in such a manner as to produce a drive-on friction fit and have no tendency to rock when seated on the pipe. The depth shall be sufficient to give positive protection against entrance of rainwater. They shall be free of sharp creases or indentations and show no evidence of metal fracture.

Caps shall have an electrodeposited coating of zinc in accordance with the requirements of ASTM B633 Class FE/ZN 8.

Texas Department of Transportation
Traffic Operations Division

SIGN MOUNTING DETAILS SMALL ROADSIDE SIGNS TRIANGULAR SLIPBASE SYSTEM

SMD(SLIP-2)-08

©TxDOT July 2002

DN: TXDOT	CK: TXDOT	DW: TXDOT	CK: TXDOT

REVISIONS 9-08

CONT	SECT	JOB	HIGHWAY
0922	33	076	CS
DIST		COUNTY	SHEET NO.
LRD		WEBB	157

26C

DATE:
FILE:

DISCLAIMER: The use of this standard is governed by the "Texas Engineering Practice Act". No warranty of any kind is made by TxDOT for any purpose whatsoever. TxDOT assumes no responsibility for the conversion of this standard to other formats or for incorrect results or damages resulting from its use.

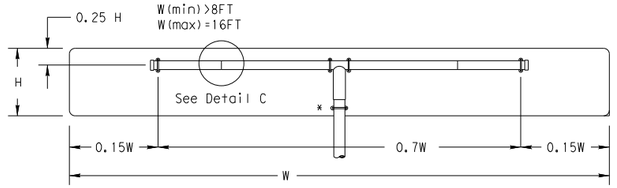

SM RD SGN ASSM TY XXXXX(1)XX(T-2EXT)

(* - See Note 12)

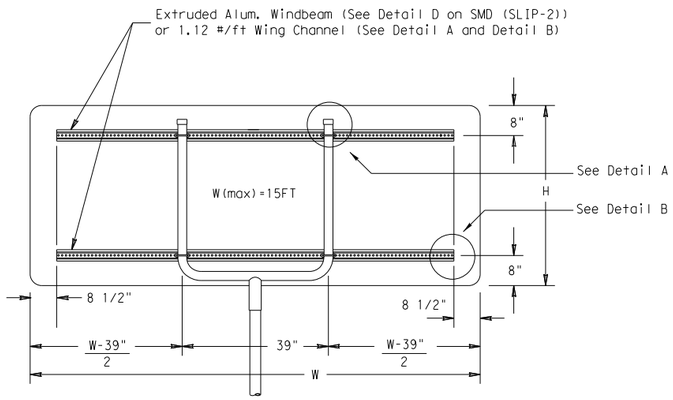

SM RD SGN ASSM TY XXXXX(1)XX(U-XX)

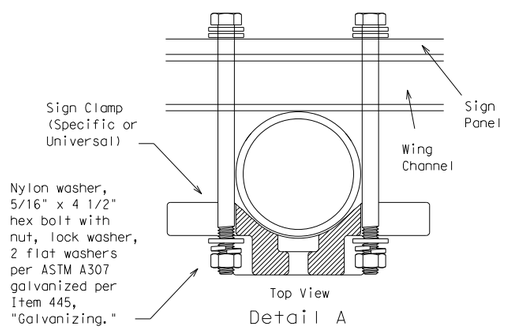

Detail A

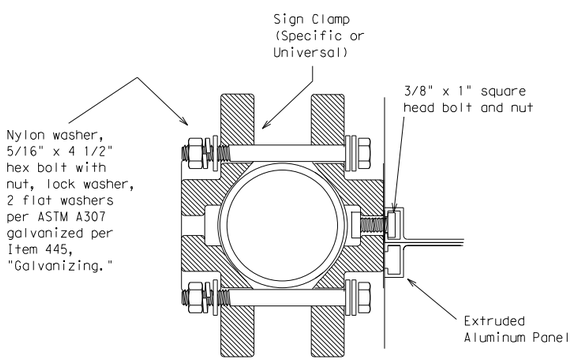

Detail D

EXTRUDED ALUMINUM SIGN WITH T BRACKET

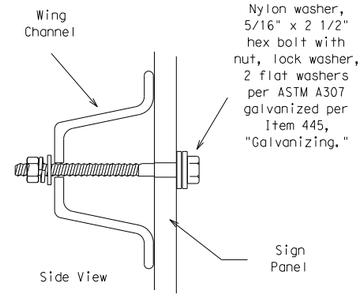

Detail B

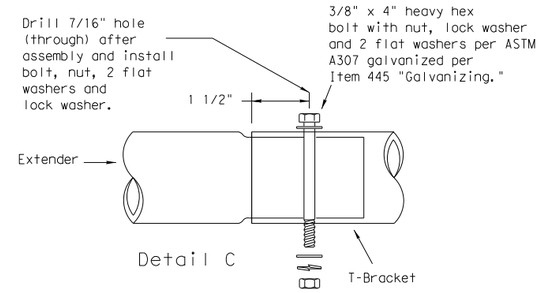

Detail C

Splices shall only be allowed behind the sign substrate.

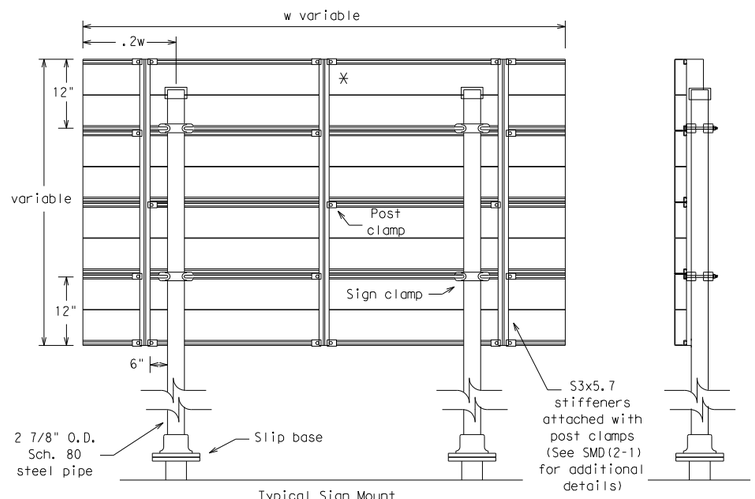

Typical Sign Mount

SM RD SGN ASSM TY S80(2)XX(P-EXAL)

* Additional stiffener placed at approximate center of signs when sign width is greater than 10'.

See Detail E for clamp installation

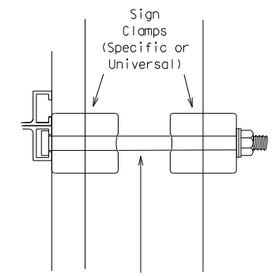

3/8" x 4 1/2"
square head
bolt, nut,
flat washer
and lock washer per
ASTM A307 galvanized
per Item 445,
"Galvanizing."

Detail E

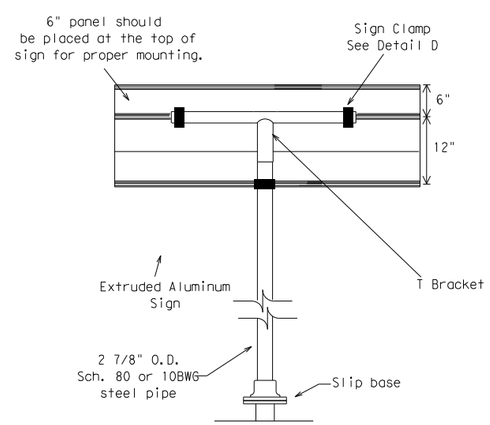

Extruded Aluminum Sign
With T Bracket

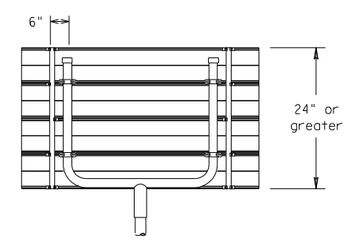

Use Extruded Alum. Windbeam as stiffeners
See SMD (2-1) for additional details

See Detail E
for clamp installation

GENERAL NOTES:

1.

SIGN SUPPORT	# OF POSTS	MAX. SIGN AREA
10 BWG	1	16 SF
10 BWG	2	32 SF
Sch 80	1	32 SF
Sch 80	2	64 SF

2. The Engineer may require that a Schedule 80 post be used in place of a 10 BWG where a sign height is abnormally high due to a fill slope.
3. Sign supports shall not be spliced except where shown. Sign support posts shall not be spliced.
4. Aluminum sign blanks shall conform to Departmental Material Specifications DMS-7110 and shall have the following minimum thicknesses: 0.080 for signs less than 7.5 sq. ft., 0.100 for signs 7.5 to 15 sq. ft., and 0.125 for signs greater than 15 sq. ft.
5. Signs that require specific supports due to reasons in addition to windloading are indicated on the "REQUIRED SUPPORT" table on this sheet.
6. For horizontal rectangular signs fabricated from flat aluminum, T-brackets are used for signs 24 inches or less in height. U-brackets are used for signs of greater height.
7. When two triangular slipbase supports are used to support a single sign, they shall not be "rigidly" connected to each other except through the sign panel. This will allow each support to act independently when impacted by an errant vehicle.
8. Wing channel shall meet ASTM A 1011 SS Gr 50 and be galvanized per ASTM A 123.
9. Excess pipe, wing channel, or windbeam shall be cut off so that it does not extend beyond the sign panel (i.e., excess support shall not be visible when the sign is viewed from the front.) Repair galvanized coating at cut support ends per Item 445, "Galvanizing."
10. Sign blanks shall be the sizes and shapes shown on the plans.
11. Additional sign clamp required on the "T-bracket" post for 24 inch high signs. Place the clamp 3 inches above bottom of sign when possible.
12. Post open ends shall be fitted with Friction Caps.

REQUIRED SUPPORT

	SIGN DESCRIPTION	SUPPORT
Regulatory	48-inch STOP sign (R1-1)	TY 10BWG(1)XX(T) TY 10BWG(1)XX(P-BM)
Regulatory	60-inch YIELD sign (R1-2)	TY 10BWG(1)XX(T) TY 10BWG(1)XX(P-BM)
Regulatory	48x16-inch ONE-WAY sign (R6-1)	TY 10BWG(1)XX(T) TY 10BWG(1)XX(P-BM)
Regulatory	36x48, 48x36, and 48x48-inch signs	TY 10BWG(1)XX(T)
Regulatory	48x60-inch signs	TY S80(1)XX(T)
Warning	48x48-inch signs (diamond or square)	TY 10BWG(1)XX(T)
Warning	48x60-inch signs	TY S80(1)XX(T)
Warning	48-inch Advance School X-ing sign (S1-1)	TY 10BWG(1)XX(T)
Warning	48-inch School X-ing sign (S2-1)	TY 10BWG(1)XX(T)
Warning	Large Arrow sign (W1-6 & W1-7)	TY 10BWG(1)XX(T)

Texas Department of Transportation
Traffic Operations Division

SIGN MOUNTING DETAILS SMALL ROADSIDE SIGNS TRIANGULAR SLIPBASE SYSTEM

SMD(SLIP-3)-08

©TxDOT July 2002

DN: TXDOT	CK: TXDOT	DW: TXDOT	CK: TXDOT
CONT	SECT	JOB	HIGHWAY
0922	33	076	CS
DIST		COUNTY	SHEET NO.
LRD		WEBB	158

9-08 REVISIONS

26D

DATE:
FILE:

DISCLAIMER:
The use of this standard is governed by the "Texas Engineering Practice Act". No warranty of any kind is made by TxDOT for any purpose whatsoever. TxDOT assumes no responsibility for the conversion of this standard to other formats or for incorrect results or damages resulting from its use.

Wedge Anchor Steel System

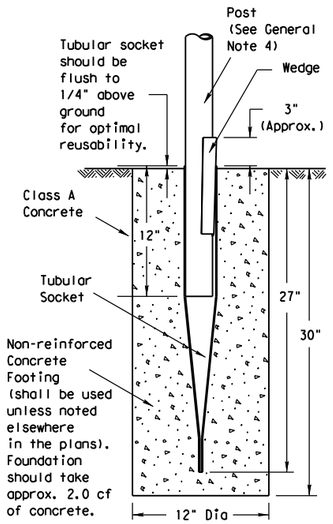

SM RD SGN ASSM TY TWT(X)WS(X)

Wedge Anchor High Density Polyethylene (HDPE) System

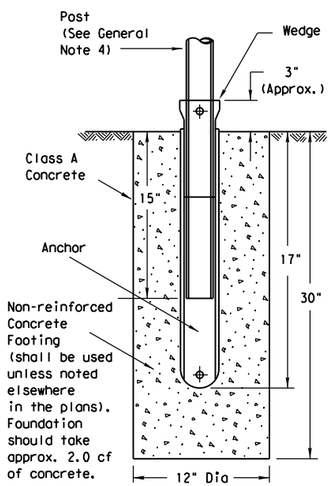

SMD RD SGN ASSM TY TWT(X)WP(X)

Universal Anchor System with Thin-Walled Tubing Post

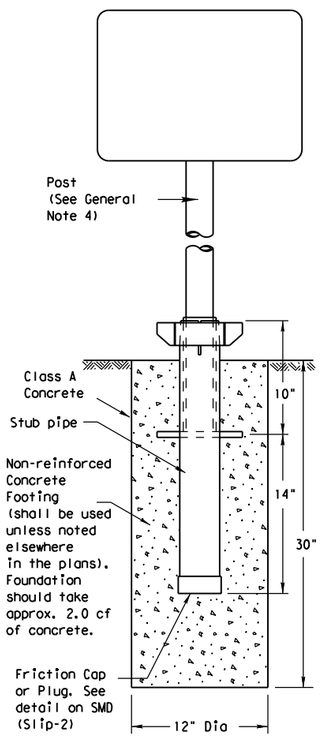

SM RD SGN ASSM TY TWT(X)UA(P)

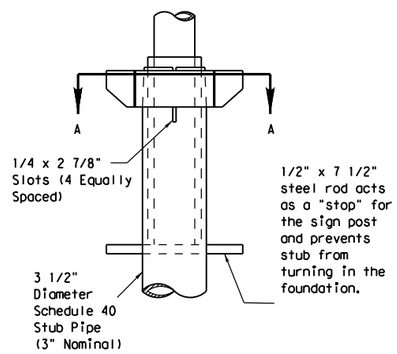

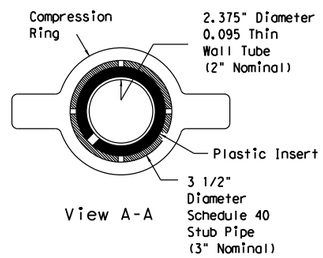

View A-A

Plastic insert must be used when using the TWT with either the Universal Anchor System or the Bolt Down Universal Anchor System. The insert should be approx. 10" long and cover the tubing from just above the top of the stub pipe to the bottom of the sign post when using the Universal Anchor System. The insert should be cut to approx. 4 1/2" when used with the Bolt Down Universal Anchor System.

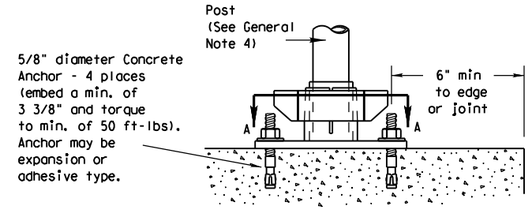

Concrete anchor consists of 5/8" diameter stud bolt with UNC series bolt threads on the upper end. A heavy hex nut per ASTM A563 and hardened washer per ASTM F436. The stud bolt shall have minimum yield and ultimate tensile strengths of 50 and 75 ksi, respectively. Nuts, bolts and washers shall be galvanized per Item 445, "Galvanizing." Top of bolt shall extend at least flush with top of nut when installed. The anchor, when installed in 4000 psi normal-weight concrete with a 3 3/8" minimum embedment, shall have a minimum allowable tension and shear of 2450 and 1525 psi, respectively. Adhesive type anchors shall have stud bolts installed with Type III epoxy per DMS-6100, "Epoxies and Adhesives." Adhesive anchors may be loaded after adequate epoxy cure time per the manufacturer's recommendations.

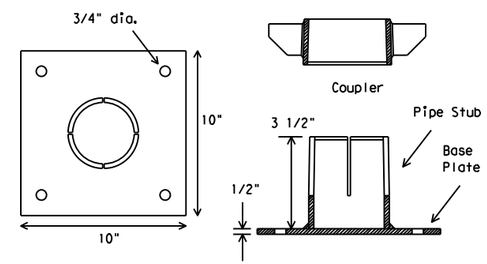

SM RD SGN ASSM TY TWT(X)UB(P)

Sign Installation Using a Prefabricated T-Bracket for Thin-Wall Tubing Post

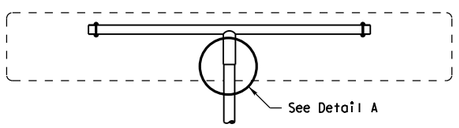

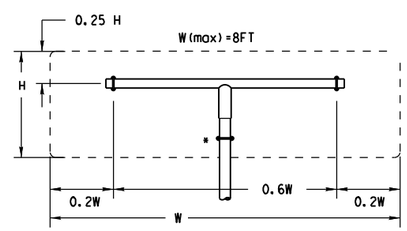

SM RD SGN ASSM TY TWT(X)XX(T)

(* - See General Note 6)

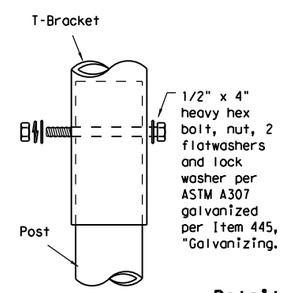

9/16" hole may need to be drilled through post to accommodate bolt.

Detail A

NOTE

The devices shall be installed per manufacturer's recommendations.
Installation procedures shall be provided to the Engineer by Contractor.

GENERAL NOTES:

1. The Wedge Anchor System and the Universal Anchor System with thin wall tubing post may be used to support up to 10 square feet of sign area.
2. The tubular socket, wedge and prefabricated T-bracket shall be permanently marked to indicate manufacturer. Method, design, and location of marking are subject to the approval of the TxDOT Traffic Standards Engineer.
3. Except for posts (13 BWG Tubing), clamps, nuts and bolts, all components shall be prequalified. A list of prequalified vendors may be obtained from the Material Producer List web page. The website address is:
   http://www.txdot.gov/business/producer list.htm
4. Material used as post with this system shall conform to the following specifications:
   13 BWG Tubing (2.375" outside diameter) (TWT)
   - 0.095" nominal wall thickness
   - Seamless or electric-resistance welded steel tubing
   - Steel shall be HSLAS Gr 55 per ASTM A1011 or ASTM A1008
   - Other steels may be used if they meet the following:
     - 55,000 PSI minimum yield strength
     - 70,000 PSI minimum tensile strength
     - 18% minimum elongation in 2"
   - Wall thickness (uncoated) shall be within the range of .083" to .099"
   - Outside diameter (uncoated) shall be within the range of 2.369" to 2.381"
   - Galvanization per ASTM 123 or ASTM A653 G210. For precoated steel tubing (ASTM A653), recoat tube outside diameter weld seam by metallizing with zinc wire per ASTM B833.
5. Sign blanks shall be the sizes and shapes shown on the plans.
6. Additional sign clamp required on the "T-bracket" post for 24" high signs. Place clamp at least 3" above bottom of sign when possible.
7. Sign supports shall not be spliced except where shown. Sign support posts shall not be spliced.
8. See the Traffic Operations Division website for detailed drawings of sign clamps and Wedge Anchor System components. The website address is:
   http://www.txdot.gov/publications/traffic.htm

WEDGE ANCHOR SYSTEM INSTALLATION PROCEDURE

1. Dig foundation hole. Where solid rock is encountered at ground level, the foundation shall be a minimum depth of 18". When solid rock is encountered below ground level, the foundation shall extend in the solid rock a minimum depth of 18" or provide a minimum foundation depth of 30". If solid rock is encountered, the socket/stub may be reduced in length as required to a minimum length of 18". Any material removed from the socket/stub shall be from the bottom and the clearance requirements given on SMD(GEN) must be followed. The inner surfaces of the socket/stub must remain free of concrete or other debris.
2. The Engineer may permit batches of concrete less than 2 cubic yards to be mixed with a portable, motor driven concrete mixer. For small placements less than 0.5 cubic yards, hand mixing in a suitable container may be allowed by Engineer. Place concrete into hole until it is approximately flush with the ground. Concrete shall be Class A.
3. Insert tubular socket into concrete until top of socket is approximaely 1/4 " above the concrete footing.
4. Plumb the socket. Allow a minimum 4 days for concrete to set, unless otherwise directed by Engineer..
5. Attach the sign to the sign post.
6. Insert the sign post into socket and align sign face with roadway.
7. Drive the wedge into the socket to secure post. This will leave approximately 3 inches of the wedge exposed.

UNIVERSAL ANCHOR SYSTEM INSTALLATION PROCEDURE

1. Dig foundation hole. Where solid rock is encountered at ground level, the foundation shall be a minimum depth of 18". When solid rock is encountered below ground level, the foundation shall extend in the solid rock a minimum depth of 18" or provide a minimum foundation depth of 30". If solid rock is encountered, the socket/stub may be reduced in length as required to a minimum length of 18". Any material removed from the socket/stub shall be from the bottom and the clearance requirements given on SMD(GEN) must be followed. The inner surfaces of the socket/stub must remain free of concrete or other debris.
2. Insert base post in hole to depths shown and backfill hole with concrete.
3. Level and plumb the base post using a torpedo level and allow concrete adequate time to set. The bottom of the slots provided in the stub pipe shall remain above the top of the concrete foundation.
4. Attach the sign to the sign post.
5. Install plastic insert around bottom of post.
6. Insert sign post into base post. Lower until the post comes to rest on steel rod.
7. Seat compression ring using a hammer. Typically, the top of compression ring will be approximately level with top of stub post when optimally installed.
8. Check sign post by hand to ensure it is unable to turn. If loose, increase the tightening of the compression ring.

Texas Department of Transportation
Traffic Operations Division

SIGN MOUNTING DETAILS SMALL ROADSIDE SIGNS WEDGE & UNIVERSAL ANCHOR WITH THIN WALL TUBING POST

SMD(TWT)-08

©TxDOT July 2002

DN: TXDOT	CK: TXDOT	DW: TXDOT	CK: TXDOT

9-08 REVISIONS

CONT	SECT	JOB	HIGHWAY
0922	33	076	CS
DIST		COUNTY	SHEET NO.
LRD		WEBB	159

26E

DATE:
FILE:

DISCLAIMER: The use of this standard is governed by the "Texas Engineering Practice Act". No warranty of any kind is made by TxDOT for any purpose whatsoever. TxDOT assumes no responsibility for the conversion of this standard to other formats or for incorrect results or damages resulting from its use.

Universal Anchor System with Fiberglass Reinforced Plastic (FRP) Post

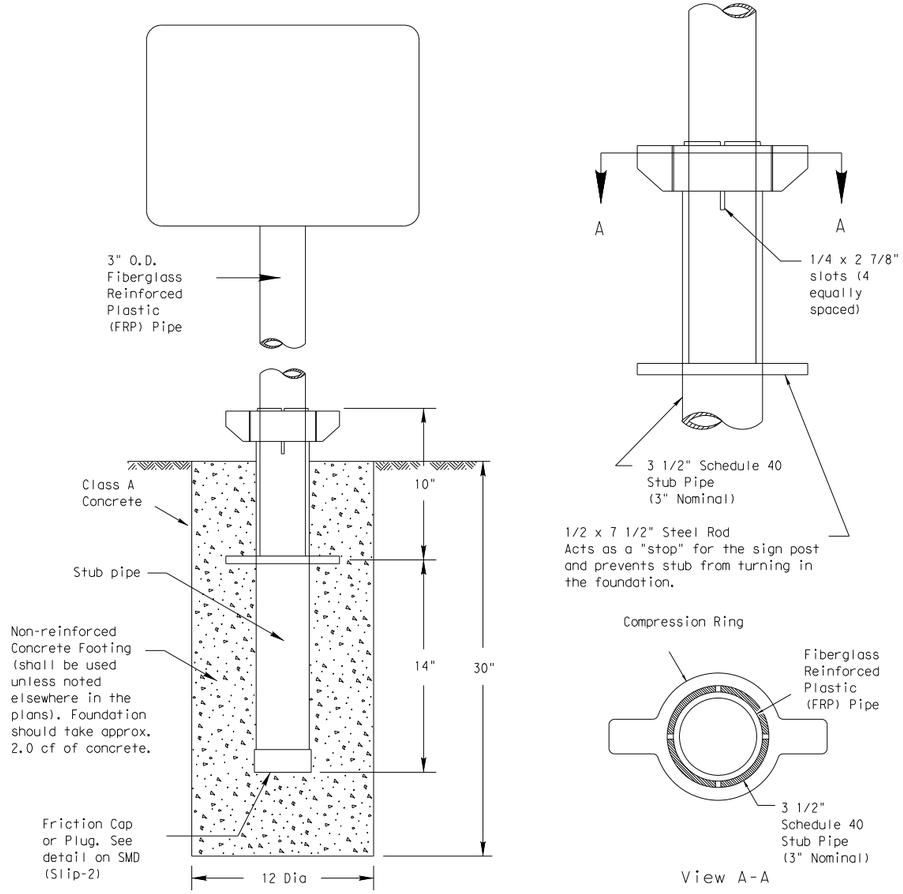

SM RD SGN ASSM TY FRP(X)UA(P)

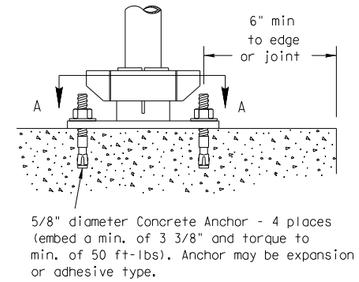

Concrete anchor consists of 5/8" diameter stud bolt with UNC series bolt threads on the upper end. A heavy hex nut per ASTM A563 and hardened washer per ASTM F436. The stud bolt shall have minimum yield and ultimate tensile strengths of 50 and 75 ksi, respectively. Nuts, bolts and washers shall be galvanized per Item 445, "Galvanizing." Top of bolt shall extend at least flush with top of nut when installed. The anchor, when installed in 4000 psi normal-weight concrete with a 3 3/8" minimum embedment, shall have a minimum allowable tension and shear of 2450 and 1525 psi, respectively. Adhesive type anchors shall have stud bolts installed with Type III epoxy per DMS-6100, "Epoxies and Adhesives." Adhesive anchors may be loaded after adequate epoxy cure time per the manufacturer's recommendations.

BOLT-DOWN DETAILS

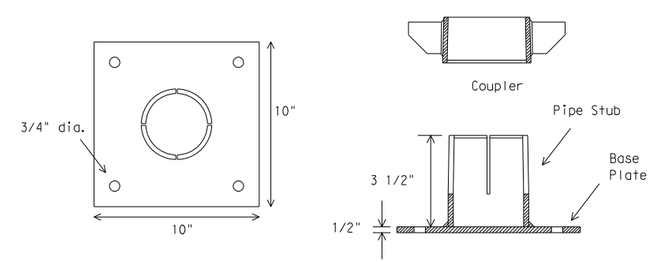

SM RD SGN ASSM TY FRP(X)UB(P)

GENERAL NOTES:

1. FRP sign supports for a single type sign support may be used for signs up to and including 16 square feet. Dual post installation may be used for signs up to and including 32 square feet.
2. All nuts, bolts and washers shall be galvanized per Item 445, "Galvanizing."
3. See the Traffic Operations Division website for detailed drawings of sign clamps. The website address is: http://www.txdot.gov/publications/traffic.htm

FRP POST REQUIREMENTS

1. Materials shall conform to the requirements of Departmental Material Specification DMS-4410 and will be furnished in a yellow or gray color as specified elsewhere in the plans.
2. Thickness of FRP sign support is 0.125" + 0.031", - 0.0".
3. FRP sign supports are prequalified by the Traffic Operations Division. Prequalification procedures are obtained by writing:
   Texas Department of Transportation
   Traffic Operations Division
   125 East 11th Street
   Austin, Texas 78701-2483

UNIVERSAL ANCHOR SYSTEM INSTALLATION PROCEDURES

1. Dig foundation hole. Where solid rock is encountered at ground level, the foundation shall be a minimum depth of 18". When solid rock is encountered below ground level, the foundation shall extend in the solid rock a minimum depth of 18" or provide a minimum foundation depth of 30". If solid rock is encountered, the socket/stub may be reduced in length as required to a minimum length of 18". Any material removed from the socket/stub shall be from the bottom and the clearance requirements given on SMD(GEN) must be followed. The inner surfaces of the socket/stub must remain free of concrete or other debris.
2. The Engineer may permit batches of concrete less than 2 cubic yards to be mixed with a portable, motor driven concrete mixer. For small placements less than 0.5 cubic yards, hand mixing in a suitable container may be allowed by Engineer. Concrete shall be Class A.
3. Insert base post in foundation hole to depths shown and fill hole with concrete. Cut base post from bottom and ensure a minimum of 18" embedment if installed in solid rock.
4. Level and plumb the base post with coupler using a torpedo level and let concrete set a minimum of 4 days, unless otherwise directed by Engineer. Bottom of base post slots shall be above the concrete footing.
5. Attach sign to FRP post.
6. Insert sign post into base post. Lower until the post comes to rest on the steel rod.
7. Use hammer to ensure the coupler is firmly seated. Top of coupler should be level with top of base post in most instances.
8. Check sign to ensure there is no twist. If loose, increase the tightening of coupler.

BOLT DOWN SIGN SUPPORT

1. Position base plate with coupler on existing concrete.
2. Drill holes into concrete and insert the 5/8" diameter bolts with wedge anchors, and tighten nuts.
3. Attach sign to FRP post.
4. Insert bottom of sign post into pipe stub.
5. Use hammer to ensure the coupler is firmly seated. Top of coupler should be level with top of base post in most instances.
6. Check sign to ensure there is no twist. If loose, increase the tightening of coupler.

Typical Sign Mounting Detail for FRP Support with Single Sign

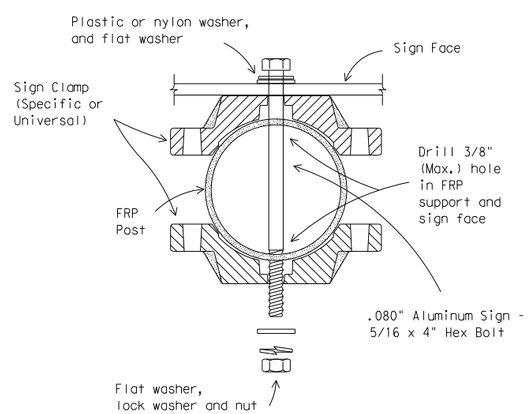

Typical Sign Mounting Detail for FRP Support with Back-to-Back Signs

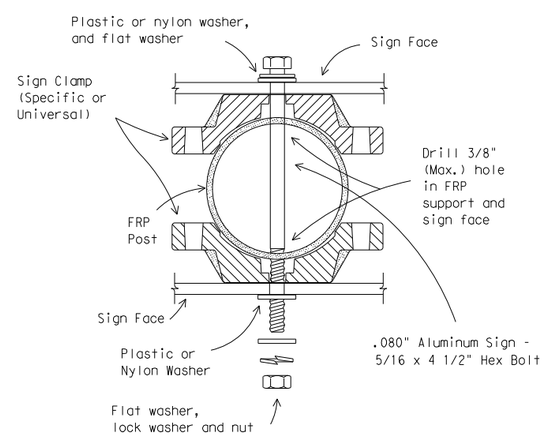

Texas Department of Transportation
Traffic Operations Division

SIGN MOUNTING DETAILS
SMALL ROADSIDE SIGNS
UNIVERSAL ANCHOR SYSTEM
WITH FRP POST

SMD(FRP)-08

©TxDOT July 2002

DN: TXDOT	CK: TXDOT	DW: TXDOT	CK: TXDOT
9-08 REVISIONS			

CONT	SECT	JOB	HIGHWAY
0922	33	076	CS
DIST		COUNTY	SHEET NO.
LRD		WEBB	160

26F

DATE:
FILE:

DISCLAIMER:
The use of this standard is governed by the "Texas Engineering Practice Act". No warranty of any kind is made by TxDOT for any purpose whatsoever. TxDOT assumes no responsibility for the conversion of this standard to other formats or for incorrect results or damages resulting from its use.

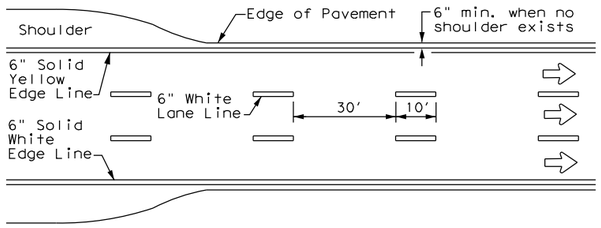

EDGE LINE AND LANE LINES ONE-WAY ROADWAY WITH OR WITHOUT SHOULDERS

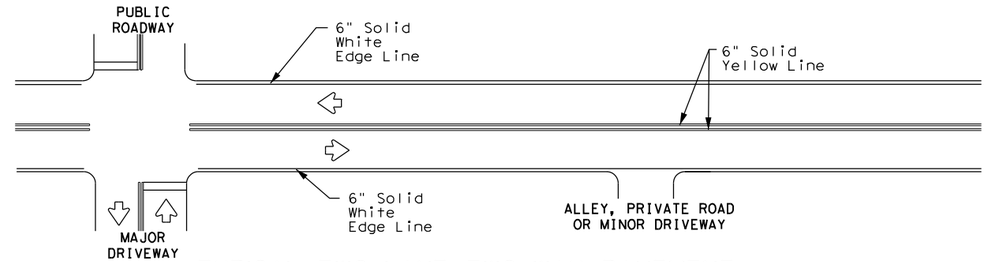

TYPICAL TWO-LANE, TWO-WAY PAVEMENT MARKINGS THROUGH INTERSECTIONS

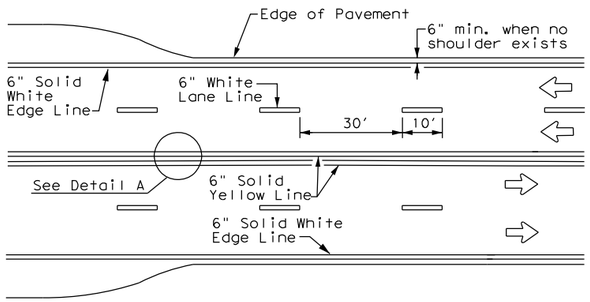

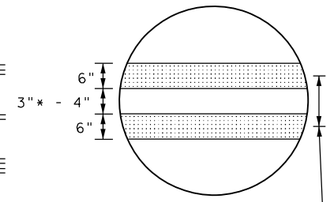

DETAIL "A"

9"** min. - 10" typ. (18" max. for traveled way greater than 48' only)

* 2" minimum for restripe projects when approved by the Engineer.

** 8" minimum for restripe projects when approved by the Engineer.

CENTERLINE AND LANE LINES FOUR LANE TWO-WAY ROADWAY WITH OR WITHOUT SHOULDERS

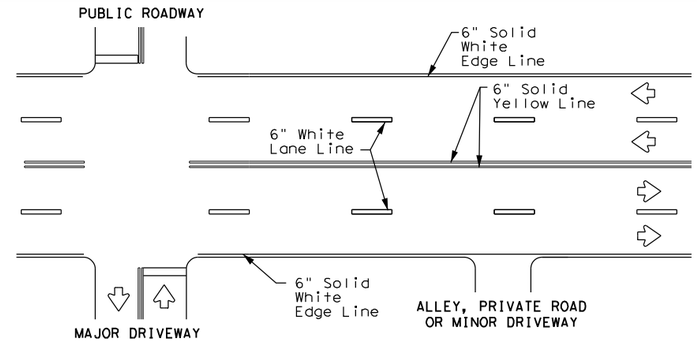

TYPICAL MULTI-LANE, TWO-WAY PAVEMENT MARKINGS THROUGH INTERSECTIONS

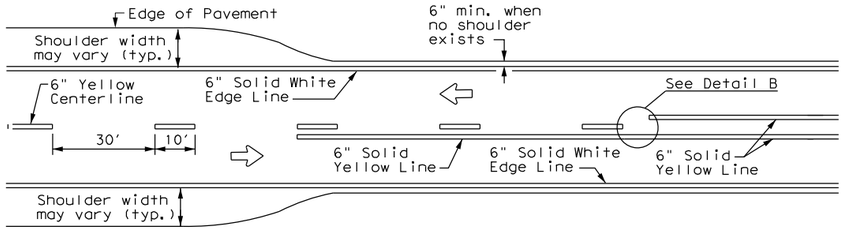

TWO LANE TWO-WAY ROADWAY WITH OR WITHOUT SHOULDERS

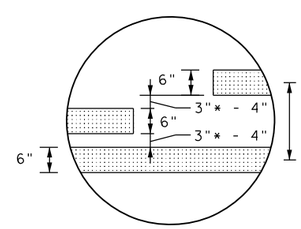

18" min. - 20" max. (16" minimum for restripe projects when approved by the Engineer.)

DETAIL "B"

* 2" minimum for restripe projects when approved by the Engineer.

For posted speed on road being marked equal to or greater than 45 MPH.

YIELD LINES

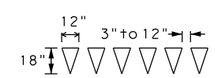

For posted speed on road being marked equal to or less than 40 MPH.

GENERAL NOTES

1. Edge line striping shall be as shown in the plans or as directed by the Engineer. The edge line should not be placed less than 6 inches from the edge of pavement. This distance may vary due to pavement raveling or other conditions. Edge lines are not required in curb and gutter sections of roadways.

2. The traveled way includes only that portion of the roadway used for vehicular travel. It does not include the parking lanes, sidewalks, berms and shoulders. The traveled ways shall be measured from the center of edge line to the center of edge line of a two lane roadway.

MATERIAL SPECIFICATIONS	
PAVEMENT MARKERS (REFLECTORIZED)	DMS-4200
EPOXY AND ADHESIVES	DMS-6100
BITUMINOUS ADHESIVE FOR PAVEMENT MARKERS	DMS-6130
TRAFFIC PAINT	DMS-8200
HOT APPLIED THERMOPLASTIC	DMS-8220
PERMANENT PREFABRICATED PAVEMENT MARKINGS	DMS-8240

All pavement marking materials shall meet the required Departmental Material Specifications as specified by the plans.

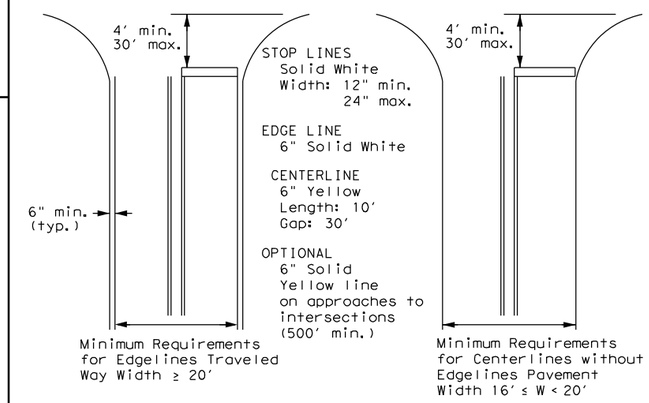

NOTE: Traveled way is exclusive of shoulder widths. Refer to General Note 2 for additional details.

GUIDE FOR PLACEMENT OF STOP LINES, EDGE LINE & CENTERLINE

Based on Traveled Way and Pavement Widths for Undivided Roadways

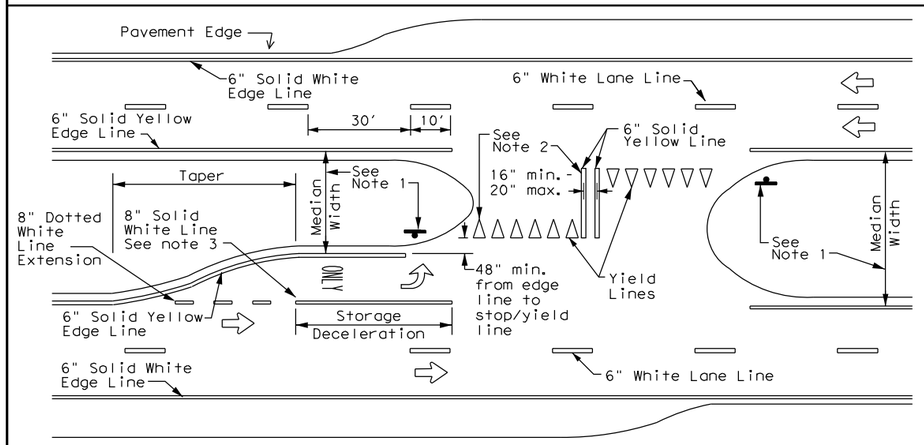

FOUR LANE DIVIDED ROADWAY CROSSOVERS

NOTES

1. Where divided highways are separated by median widths at the median opening itself of 30 feet or more, median openings shall be signed as two separate intersections. Each median opening has two width measurements, with one measurement for each approach. The narrow median width will be the controlling width to determine if signs are required. Yield signs are the typical intersection control. Stop signs and stop bars are optional as determined by the Engineer.

2. Install median striping (double yellow centerlines and stop lines/yield lines) when a 50' or greater median centerline can be placed. Stop lines shall only be used with stop signs. Yield lines shall only be used with yield signs.

3. Length of turn bays, including taper, deceleration, and storage lengths shall be as shown on the plans or as directed by the Engineer.

Texas Department of Transportation

Traffic Safety Division Standard

TYPICAL STANDARD PAVEMENT MARKINGS

PM(1)-22

FILE: pm1-22.dgn	DN:	CK:	DW:	CK:
© TxDOT December 2022	CONT	SECT	JOB	HIGHWAY
REVISIONS 11-78 8-00 6-20 8-95 3-03 12-22 5-00 2-12	0922	33	076	CS
	DIST		COUNTY	SHEET NO.
	LRD		WEBB	161

22A

DATE:
FILE:

REFLECTIVE RAISED PAVEMENT MARKERS FOR VEHICLE POSITIONING GUIDANCE

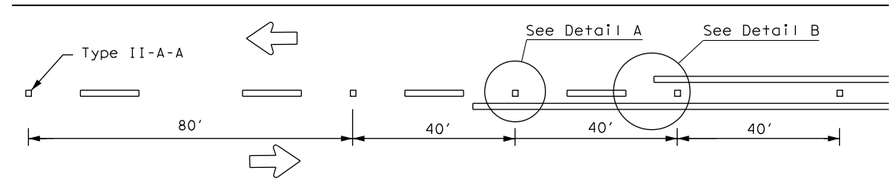

CENTERLINE FOR ALL TWO LANE TWO-WAY ROADWAYS

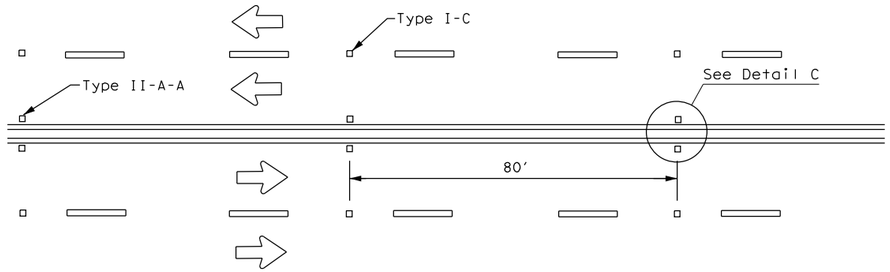

CENTERLINE & LANE LINES FOR FOUR LANE TWO-WAY ROADWAYS

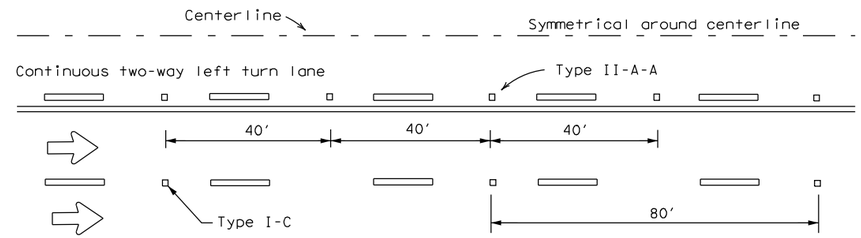

CENTERLINE AND LANE LINES FOR TWO-WAY LEFT TURN LANE

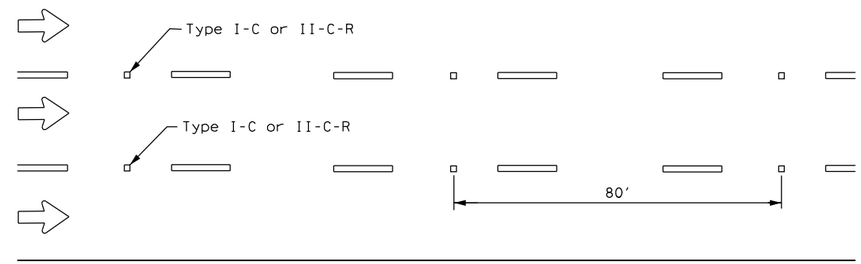

LANE LINES FOR ONE-WAY ROADWAY (NON-FREEWAY FACILITIES)

Raised pavement markers Type II-C-R shall have clear face toward normal traffic and red face toward wrong-way traffic.

See Note 3.

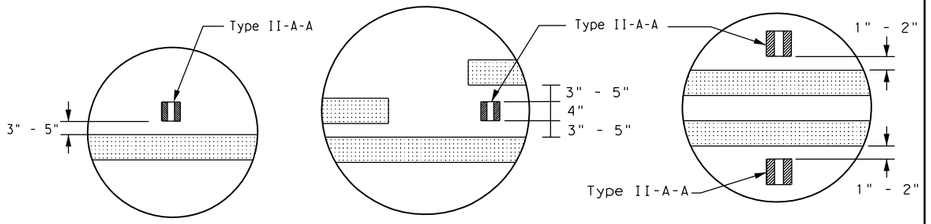

DETAIL "A" DETAIL "B" DETAIL "C"

MATERIAL SPECIFICATIONS	
PAVEMENT MARKERS (REFLECTORIZED)	DMS-4200
EPOXY AND ADHESIVES	DMS-6100
BITUMINOUS ADHESIVE FOR PAVEMENT MARKERS	DMS-6130
TRAFFIC PAINT	DMS-8200
HOT APPLIED THERMOPLASTIC	DMS-8220
PERMANENT PREFABRICATED PAVEMENT MARKINGS	DMS-8240

All pavement marking materials shall meet the required Departmental Material Specifications as specified by the plans.

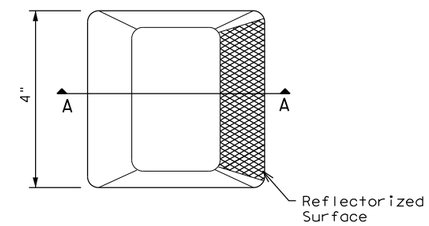

Type I (Top View)

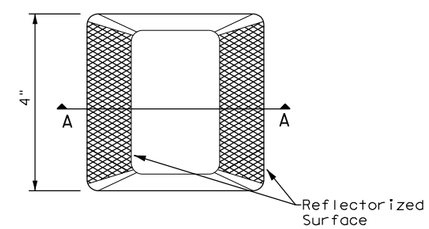

Type II (Top View)

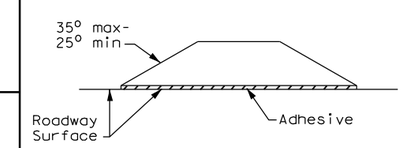

SECTION A

RAISED PAVEMENT MARKERS

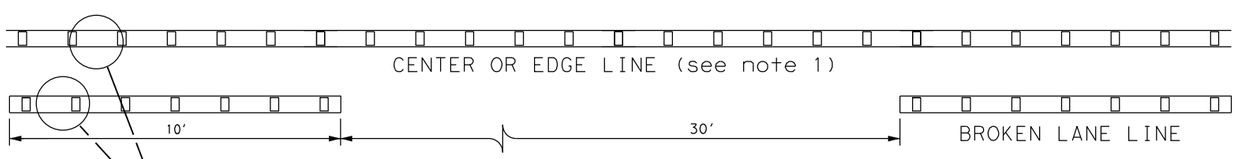

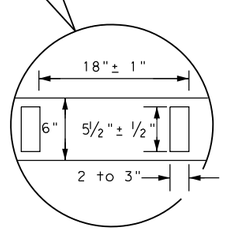

6" EDGE LINE, 6" CENTERLINE OR 6" LANE LINE

REFLECTORIZED PROFILE PATTERN DETAIL

USING REFLECTIVE PROFILE PAVEMENT MARKINGS

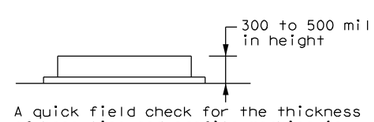

A quick field check for the thickness of base line and profile marking is approximately equal to a stack of 5 quarters to a maximum height of 7 quarters.

NOTES

1. Edge lines should typically be 6" wide and the materials shall be specified in the plans.
2. Profile markings shall not be placed on roadways with a posted speed limit of 45 MPH or less.

GENERAL NOTES

1. All raised pavement markers placed along broken lines shall be placed in line with and midway between the stripes.
2. On concrete pavements, the raised pavement markers should be placed to one side of the longitudinal joints.
3. Use raised pavement marker Type I-C with undivided roadways, flush medians, and two way left turn lanes. Use raised pavement marker Type II-C-R with divided highways and raised medians.

Texas Department of Transportation — Traffic Safety Division Standard

POSITION GUIDANCE USING RAISED MARKERS REFLECTORIZED PROFILE MARKINGS PM(2)-22

FILE: pm2-22.dgn	DN:	CK:	DW:	CK:
©TxDOT December 2022	CONT	SECT	JOB	HIGHWAY
REVISIONS 4-77 8-00 6-20 4-92 2-10 12-22 5-00 2-12	0922	33	076	CS
	DIST		COUNTY	SHEET NO.
	LRD		WEBB	162

22B

DISCLAIMER:
The use of this standard is governed by the "Texas Engineering Practice Act". No warranty of any kind is made by TxDOT for any purpose whatsoever. TxDOT assumes no responsibility for the conversion of this standard to other formats or for incorrect results or damages resulting from its use.

DATE:
FILE:

DISCLAIMER:
The use of this standard is governed by the "Texas Engineering Practice Act". No warranty of any kind is made by TxDOT for any purpose whatsoever. TxDOT assumes no responsibility for the conversion of this standard to other formats or for incorrect results or damages resulting from its use.

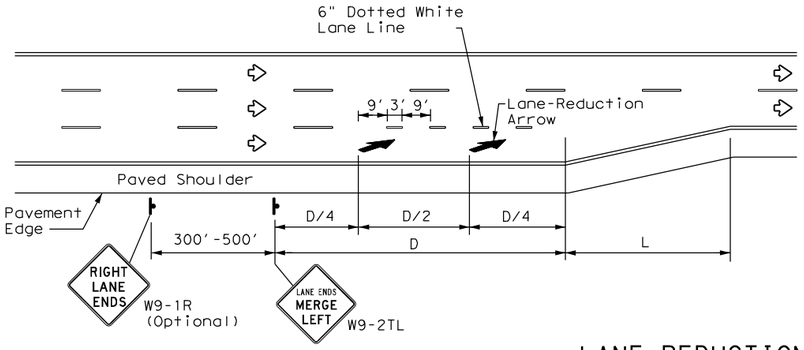

LANE REDUCTION

NOTES

1. Lane reduction pavement markings are used where the number of through lanes is reduced because of narrowing of the roadway or because of a section of on-street parking in what would otherwise be a through lane. For Texas Super 2 Passing Lanes, see TS2(PL) standard sheets.
2. On divided highways, an additional RIGHT LANE ENDS (W9-1R) sign may be installed in the median aligned with the W9-1R sign on the right side of the highway.
3. Lane reduction arrows are required for speeds of 45 mph or greater. An optional third lane reduction arrow may be added based on engineering judgement. If used, the optional third lane reduction arrow should be centered between the first and last lane reduction arrows.
4. For lane reductions on Freeways and Expressways, signing shall conform to the TxDOT Freeway Signing Handbook.

ADVANCED WARNING SIGN DISTANCE (D)		
Posted Speed	D (ft)	L (ft)
30 MPH	460	$L = \frac{WS^2}{60}$
35 MPH	565	
40 MPH	670	
45 MPH	775	L=WS
50 MPH	885	
55 MPH	990	
60 MPH	1,100	
65 MPH	1,200	
70 MPH	1,250	
75 MPH	1,350	

GENERAL NOTES

1. Lane use word and arrow markings shall be used where through lanes approaching an intersection become mandatory turn lanes. Lane use word and arrow markings should be used in auxiliary lanes of substantial length. Lane use arrow markings or word and arrow markings may be used in other lanes and turn bays for emphasis. Details for words and arrows are as shown in the Standard Highway Sign Designs for Texas.
2. When lane-use words and arrow markings are used, two sets of arrows should be used if the length of the bay is greater than 180 feet. When a single lane use arrow or word and arrow marking is used for a short turn lane, it should be located at or near the upstream end of the full-width turn lane.
3. Use raised pavement marker Type I-C with undivided highways, flush medians and two way left turn lanes. Use raised pavement marker Type II-C-R with divided highways and raised medians.
4. Length of turn bays, including taper, deceleration, and storage lengths shall be as shown on the plans or as directed by the Engineer. See Chapter 3 of the Roadway Design Manual for additional information on turning lanes or storage lengths.

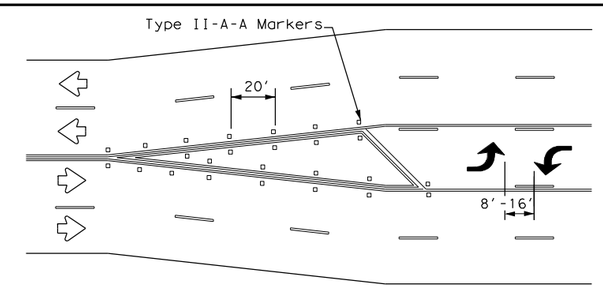

A two-way left-turn (TWLT) lane-use arrow pavement marking should be used at or just downstream from the beginning of a two-way left-turn lane within a corridor. Repeating the marking after each intersection or dedicated turn bay is not required unless stated elsewhere in the plans.

TYPICAL TRANSITION FOR TWLTL AND DIVIDED HIGHWAY

MATERIAL SPECIFICATIONS	
PAVEMENT MARKERS (REFLECTORIZED)	DMS-4200
EPOXY AND ADHESIVES	DMS-6100
BITUMINOUS ADHESIVE FOR PAVEMENT MARKERS	DMS-6130
TRAFFIC PAINT	DMS-8200
HOT APPLIED THERMOPLASTIC	DMS-8220
PERMANENT PREFABRICATED PAVEMENT MARKINGS	DMS-8240

All pavement marking materials shall meet the required Departmental Material Specifications as specified by the plans.

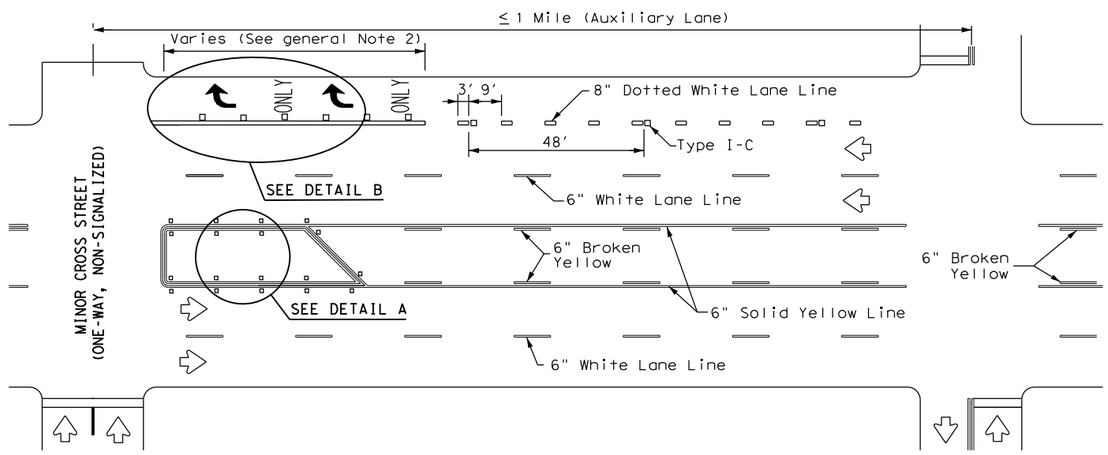

TYPICAL TWLTL AT ONE-WAY STREET AND RIGHT TURN AUXILIARY LANE

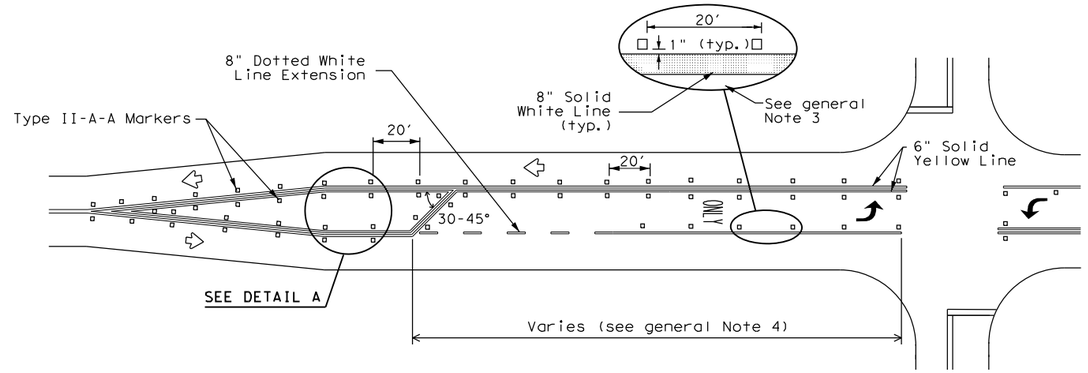

TYPICAL TWO-LANE ROADWAY INTERSECTION WITH LEFT TURN BAYS

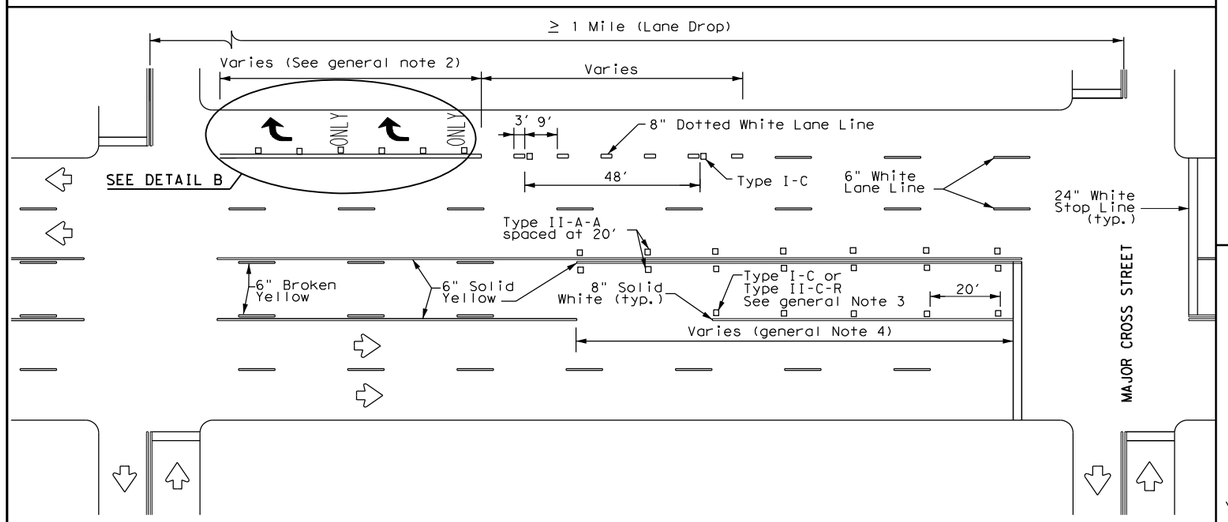

TYPICAL TWLTL AT TWO-WAY CROSS STREET AND RIGHT TURN LANE DROP

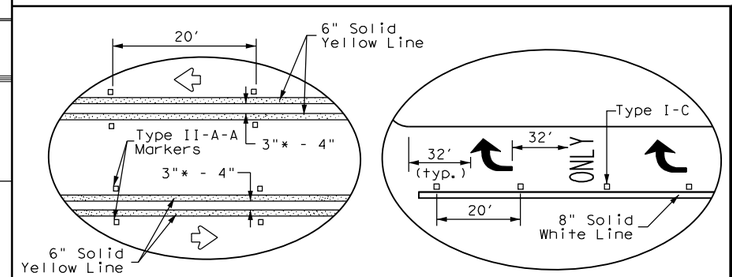

DETAIL A DETAIL B

* 2" minimum allowed for restripe projects when approved by the Engineer.

Texas Department of Transportation — Traffic Safety Division Standard

TWO-WAY LEFT TURN LANES, RURAL LEFT TURN BAYS, AND LANE REDUCTION PAVEMENT MARKINGS

PM(3)-22

FILE: pm3-22.dgn	DN:	CK:	DW:	CK:
©TxDOT December 2022	CONT	SECT	JOB	HIGHWAY
REVISIONS 4-98 3-03 6-20 / 5-00 2-10 12-22 / 8-00 2-12	0922	33	076	CS
	DIST		COUNTY	SHEET NO.
	LRD		WEBB	163

22C

DATE:
FILE:

DISCLAIMER:
The use of this standard is governed by the "Texas Engineering Practice Act". No warranty of any kind is made by TxDOT for any purpose whatsoever. TxDOT assumes no responsibility for the conversion of this standard to other formats or for incorrect results or damages resulting from its use.

REFLECTOR UNIT SIZES FOR DELINEATORS AND OBJECT MARKERS

	SIZE 1	SIZE 2	SIZE 3	SIZE 4
DEVICE	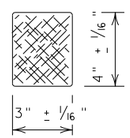	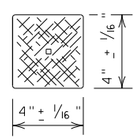	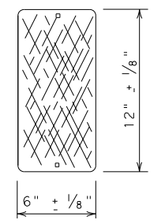	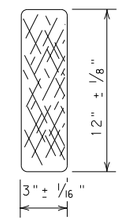
SHEETING	Yellow, White or Red Type B or C reflective sheeting			
NOTE	1. Size 1 and 4 - Direct applied reflective sheeting for use on flexible post (flx). 2. Size 2 and 3 - For use on wing channel (wc) post only. Use approved metal, plastic or fiberglass backplate with 17/64" mounting holes.			

DELINEATORS

	SINGLE		DOUBLE	
DEVICE	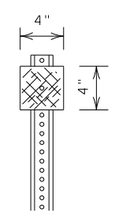	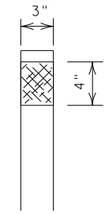	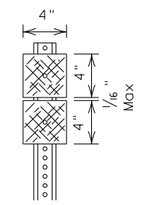	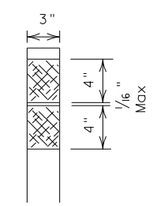
	1-Size 2 reflector unit	1-Size 1 reflector unit	2-Size 2 reflector units	2-Size 1 reflector units
SHEETING	Yellow, White or Red Type B or C Reflective Sheeting			
POST TYPE	WC	YFLX, WFLX	WC	YFLX, WFLX
MOUNT TYPE	GND	GND, SRF	GND	GND, SRF

D & OM DESCRIPTIVE CODES

INSTL DEL ASSM (D-XX)SZ X (XXXX)XXX(XX)

NUMBER OF REFLECTORS
- S = Single
- D = Double

COLOR OF REFLECTORS
- W = White
- Y = Yellow
- R = Red

REFLECTOR UNIT SIZE
- 1 or 2

TYPE OF POST OR DELINEATOR
- WC = Wing Channel Post
- YFLX = Yellow Flexible Post
- WFLX = White Flexible Post
- BRF = Barrier Reflector

TYPE OF MOUNT
- GND = Embedded (drivable or set in concrete)
- CTB = Concrete Barrier Mount
- GF1 or GF2 = Guard Fence Attachment
- SRF = Surface Mount

DIRECTION
- If Required
- BI = Bi-Directional
- BR = Bi-Directional with red on back

INSTL OM ASSM (OM-XX) (XXXX)XXX(XX)

TYPE OF OBJECT MARKER
- 1, 2, 3, or 4

NUMBER OF REFLECTORS OR DIRECTION
- X = 3-Size 2 reflector units (Type 2 only)
- Y = 1-Size 3 reflector unit (Type 2 only)
- Z = 3-Size 1 or 1-Size 4 reflector unit(s)(Type 2 only)
- L = Left Side (Type 3 Object Marker only)
- R = Right Side (Type 3 Object Marker only)
- C = Center (Type 3 Object Marker only)

TYPE OF POST
- WC = Wing Channel Post
- WFLX = White Flexible Post
- TWT = Thin Walled Tubing

TYPE OF MOUNT
- GND = Embedded (drivable)
- SRF = Surface Mount
- WAS = Wedge Anchor Steel
- WAP = Wedge Anchor Plastic

DIRECTION
- If Required
- BI = Bi-Directional

DEPARTMENTAL MATERIAL SPECIFICATIONS	
FLEXIBLE DELINEATOR & OBJECT MARKER POSTS (EMBEDDED & SURFACE MOUNT TYPES)	DMS-4400
SIGN FACE MATERIALS	DMS-8300
DELINEATORS, OBJECT MARKERS AND BARRIER REFLECTORS	DMS-8600

OBJECT MARKERS

	Type 1 (OM-1)	Type 2 (OM-2)			Type 3 (OM-3)			Type 4 (OM-4)
	OM-1	OM-2X	OM-2Y	OM-2Z	OM-3L	OM-3R	OM-3C	OM-4
DEVICE	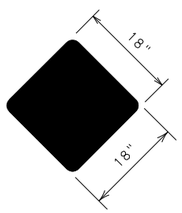	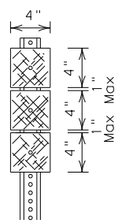	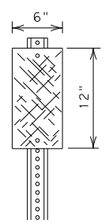	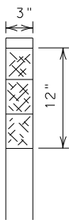	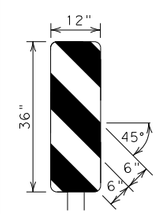	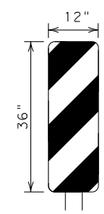	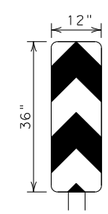	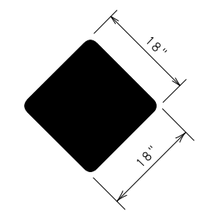
		3-Size 2 reflector units	1-Size 3 reflector unit	3-Size 1 reflector units or 1-Size 4 reflector unit				
SHEETING	Yellow-Type B_{FL} or C_{FL} Sheeting	Yellow - Type B or C Sheeting			Alternating acrylic black and retroflective yellow - Type B_{FL} or C_{FL} Sheeting			Red -Type B_{FL} or C_{FL} Sheeting
POST TYPE	TWT	WC	WC	WFLX	TWT			TWT
MOUNT TYPE	WAS, WAP	GND	GND	GND, SRF	WAS, WAP			WAS, WAP

BARRIER REFLECTORS (BRF)

	GF1	GF2	CTB
DEVICE	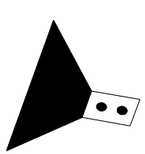		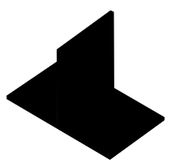
	1. Barrier reflectors shall meet the requirements of DMS 8600. 2. Approved Barrier Reflectors are listed on the "Barrier Reflectors" Material Producer List at: www.txdot.gov.		
SHEETING	Yellow, White, Red		
NOTE	1. Reflective sheeting shall have a minimum dimension of 3 inches and minimum surface area of 9 square inches.		

CHEVRONS

DEVICE	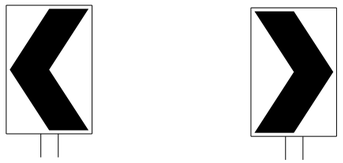 W1-8			
SIZE (W x L)	18"x 24" (Conventional)	24"x 30" (Conventional Oversize)	30"x 36" (Expressway)	36" x 48" (Freeway)
MOUNTING HEIGHT	4'-0" or 7'-0"		7'-0" Only	
NOTE	1. CHEVRON (W1-8) signs and ONE DIRECTION LARGE ARROW (W1-6) Signs shall be installed per Sign Mounting Details (SMD) Standard Sheets and paid under Item 644 (Small Roadside Sign Assemblies). 2. When there is a need to increase conspicuity, the Texas version of the ONE DIRECTION LARGE ARROW sign (W1-9T) may be used instead of the ONE DIRECTION LARGE ARROW (W1-6).			

ONE DIRECTION LARGE ARROW

DEVICE	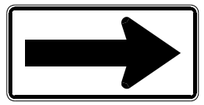 W1-6	
SIZE (W x L)	48" x 24" (Conventional)	60" x 30" (Expressway & Freeway)
MOUNTING HEIGHT	7'-0"	

NOTE:

Delineator and object marker substrates and sign substrates shall be 0.080" Aluminum sign blank to conform to ASTM B-209 Alloy 6061-T6 or approved alternative.

Texas Department of Transportation — Traffic Safety Division Standard

DELINEATOR & OBJECT MARKER MATERIAL DESCRIPTION

D & OM(1)-20

FILE: dom1-20.dgn	DN: TXDOT	CK: TXDOT	DW: TXDOT	CK: TXDOT
©TxDOT August 2004	CONT	SECT	JOB	HIGHWAY
REVISIONS	0922	33	076	CS
10-09 3-15	DIST		COUNTY	SHEET NO.
4-10 7-20	LRD		WEBB	164

20A

DATE:
FILE:

DISCLAIMER
The use of this standard is governed by the "Texas Engineering Practice Act". No warranty of any kind is made by TxDOT for any purpose whatsoever. TxDOT assumes no responsibility for the conversion of this standard to other formats or for incorrect results or damages resulting from its use.

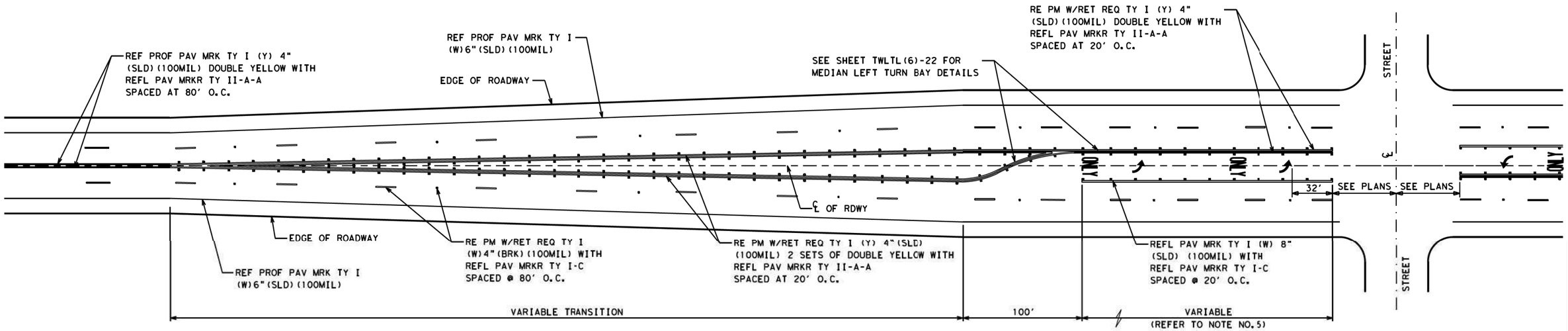

TYPICAL MEDIAN LEFT TURN BAY (FOR USE ON RURAL ROADS)

SIGNALIZED AND NON-SIGNALIZED CROSS STREETS
WITH LEFT TURN BAY

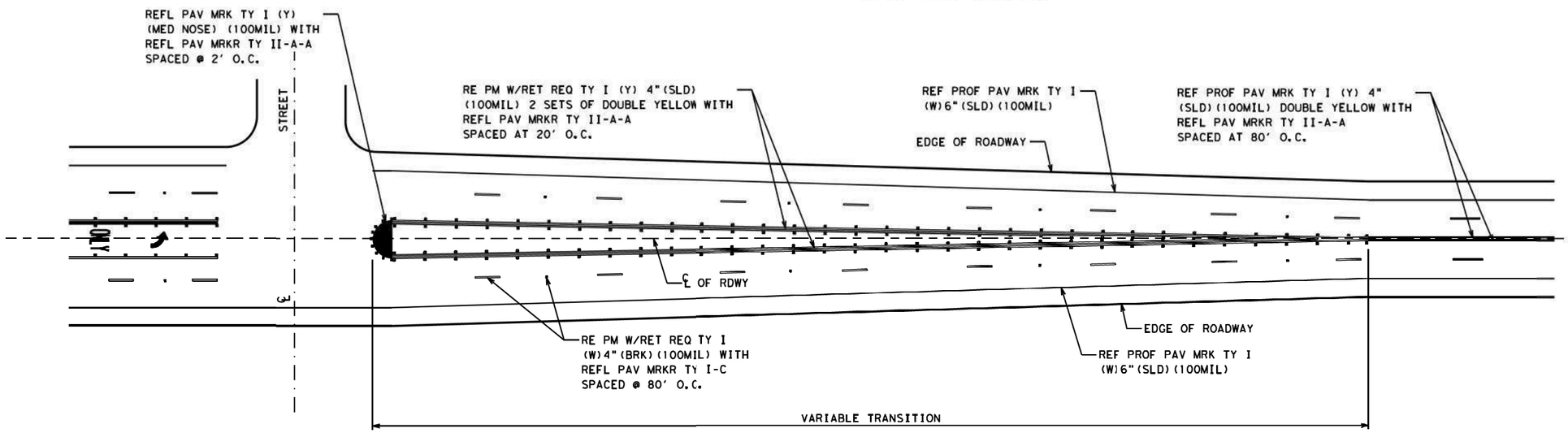

NOTES:

1. PAVEMENT MARKERS SHOULD BE IN ACCORDANCE WITH STATE STANDARDS PM(2)-20 (POSITIONING GUIDANCE).
2. PAVEMENT MARKING ARROWS SHALL COMPLY TO TEXAS MUTCD
3. LEFT TURN BAY LAYOUT, TWO SETS OF "WORDS" AND "ARROWS" SHALL BE USED IF THE LENGTH OF THE BAY IS EQUAL TO OR GREATER THAN 180 FEET. THE BOTTOM OF THE FIRST "ONLY" SHALL BE PLACED AT THE BEGINNING OF THE TURN BAY LANE LINE AS SHOWN ABOVE.
4. REFER TO TXDOT STANDARD PM(3)-20 FOR MORE TURN LANE DETAILS.
5. REFER TO TXDOT ROADWAY DESIGN MANUAL FOR DECELERATION AND STORAGE LENGTH.

TYPICAL TRANSITION

LEFT TURN BAY END CONDITION AND ROADWAY TRANSITION

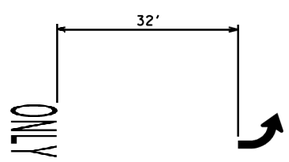

LEGEND

TYPICAL DETAIL
(PLACE LEGENDS IN ACCORDANCE TO STATE STANDARD PM(3)-20)

Texas Department of Transportation
© 2018

San Antonio District Standard

TWO WAY LEFT TURN LANE AND LEFT TURN BAYS - RURAL ROADS

SCALE: NS

TWLTL(1)-22

REVISIONS	FED. RD. DIV. NO.	FEDERAL AID PROJECT NO.		SHEET NO.
MAY 2010 MAY 2018 MAY 2022	6	DMO 2012 (628)		165
	STATE	DIST.	COUNTY	
	TX	LRD	WEBB	
	CONT.	SECT.	JOB	HIGHWAY NO.
	0922	33	076	CS

$FILE$ $DATE$ $TIME$ REVISED ON 5-18 CHECKED BY G.C./OMG REVISED BY: JCO3 DRAWN BY: TED

DISCLAIMER
The use of this standard is governed by the "Texas Engineering Practice Act". No warranty of any kind is made by TxDOT for any purpose whatsoever. TxDOT assumes no responsibility for the conversion of this standard to other formats or for incorrect results or damages resulting from its use.

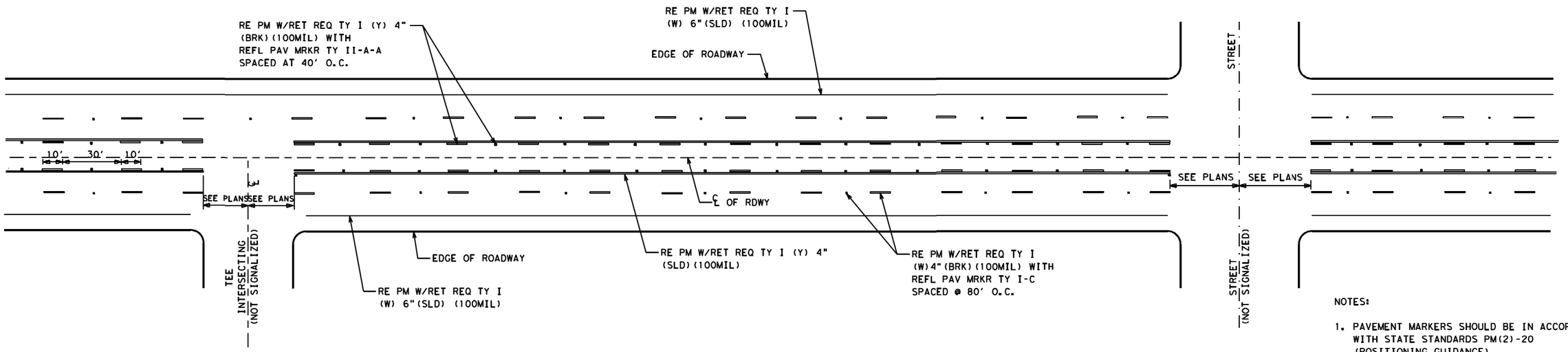

TWO WAY LEFT TURN LANE DETAILS

NON-SIGNALIZED INTERSECTIONS

NOTES:

1. PAVEMENT MARKERS SHOULD BE IN ACCORDANCE WITH STATE STANDARDS PM(2)-20 (POSITIONING GUIDANCE).
2. PAVEMENT MARKING ARROWS SHALL COMPLY TO TEXAS MUTCD
3. LEFT TURN BAY LAYOUT, TWO SETS OF "WORDS" AND "ARROWS" SHALL BE USED IF THE LENGTH OF THE BAY IS EQUAL TO OR GREATER THAN 180 FEET. THE BOTTOM OF THE FIRST "ONLY" SHALL BE PLACED AT THE BEGINNING OF THE TURN BAY LANE LINE AS SHOWN ABOVE.
4. REFER TO TXDOT STANDARD PM(3)-20 FOR MORE TURN LANE DETAILS.
5. REFER TO TXDOT ROADWAY DESIGN MANUAL FOR DECELERATION AND STORAGE LENGTH.

Texas Department of Transportation
© 2018

San Antonio District Standard

TWO WAY LEFT TURN LANE AND LEFT TURN BAYS - URBAN ROADS

SCALE: NS

TWLTL(3)-21

REVISIONS	FED. RD. DIV. NO.	FEDERAL AID PROJECT NO.		SHEET NO.
MAY 2010 MAY 2018 MAY 2022	6	DMO 2012 (628)		166
	STATE	DIST.	COUNTY	
	TX	LRD	WEBB	
	CONT.	SECT.	JOB	HIGHWAY NO.
	0922	33	076	CS

$FILE$ $DATE$ $TIME$ REVISED ONE 5-18 CHECKED BY G.G./OMG REVISED BY: JCO3 DRAWN BY: TED

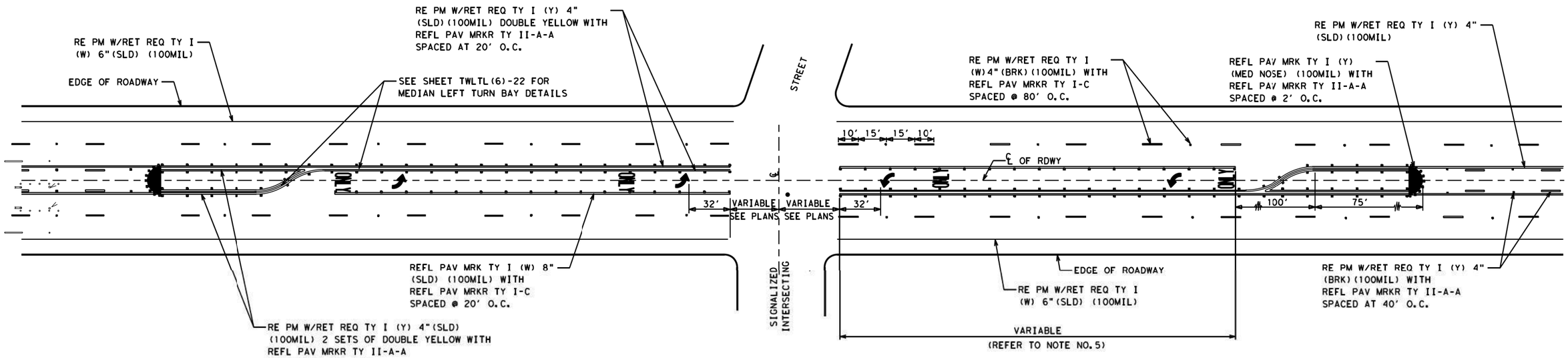

TYPICAL
TWO WAY LEFT TURN LANE DETAILS
SIGNALIZED INTERSECTION

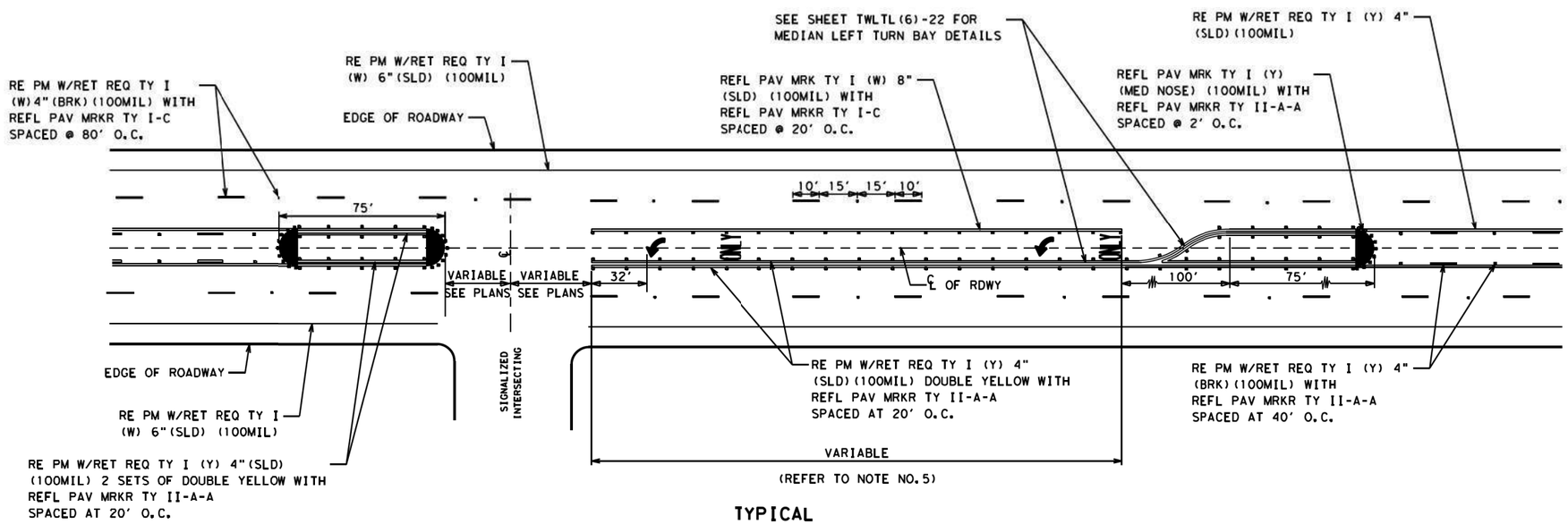

TYPICAL
TWO WAY LEFT TURN LANE DETAILS
SIGNALIZED TEE INTERSECTION

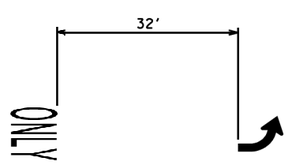

LEGEND

TYPICAL DETAIL
(PLACE LEGENDS IN ACCORDANCE TO STATE STANDARD PM(3)-20)

NOTES:

1. PAVEMENT MARKERS SHOULD BE IN ACCORDANCE WITH STATE STANDARDS PM(2)-20 (POSITIONING GUIDANCE).
2. PAVEMENT MARKING ARROWS SHALL COMPLY TO TEXAS MUTCD
3. LEFT TURN BAY LAYOUT, TWO SETS OF "WORDS" AND "ARROWS" SHALL BE USED IF THE LENGTH OF THE BAY IS EQUAL TO OR GREATER THAN 180 FEET. THE BOTTOM OF THE FIRST "ONLY" SHALL BE PLACED AT THE BEGINNING OF THE TURN BAY LANE LINE AS SHOWN ABOVE.
4. REFER TO TXDOT STANDARD PM(3)-20 FOR MORE TURN LANE DETAILS.
5. REFER TO TXDOT ROADWAY DESIGN MANUAL FOR DECELERATION AND STORAGE LENGTH.

DISCLAIMER
The use of this standard is governed by the "Texas Engineering Practice Act". No warranty of any kind is made by TxDOT for any purpose whatsoever. TxDOT assumes no responsibility for the conversion of this standard to other formats or for incorrect results or damages resulting from its use.

DATE	REVISED BY	CHECKED BY	REVISED BY	DRAWN BY
$DATE$	REVISED ONS 5-18	CHECKED BY G.C./OMG	REVISED BY: JCO3	DRAWN BY: TED

$TIME$

$FILE$

Texas Department of Transportation
© 2018

San Antonio District Standard

TWO WAY LEFT TURN LANE AND LEFT TURN BAYS - URBAN ROADS

SCALE: NS

TWLTL(4)-21

REVISIONS	FED. RD. DIV. NO.	FEDERAL AID PROJECT NO.		SHEET NO.
MAY 2010 MAY 2018 MAY 2022	6	DMO 2012 (628)		167
	STATE	DIST.	COUNTY	
	TX	LRD	WEBB	
	CONT.	SECT.	JOB	HIGHWAY NO.
	0922	33	076	CS

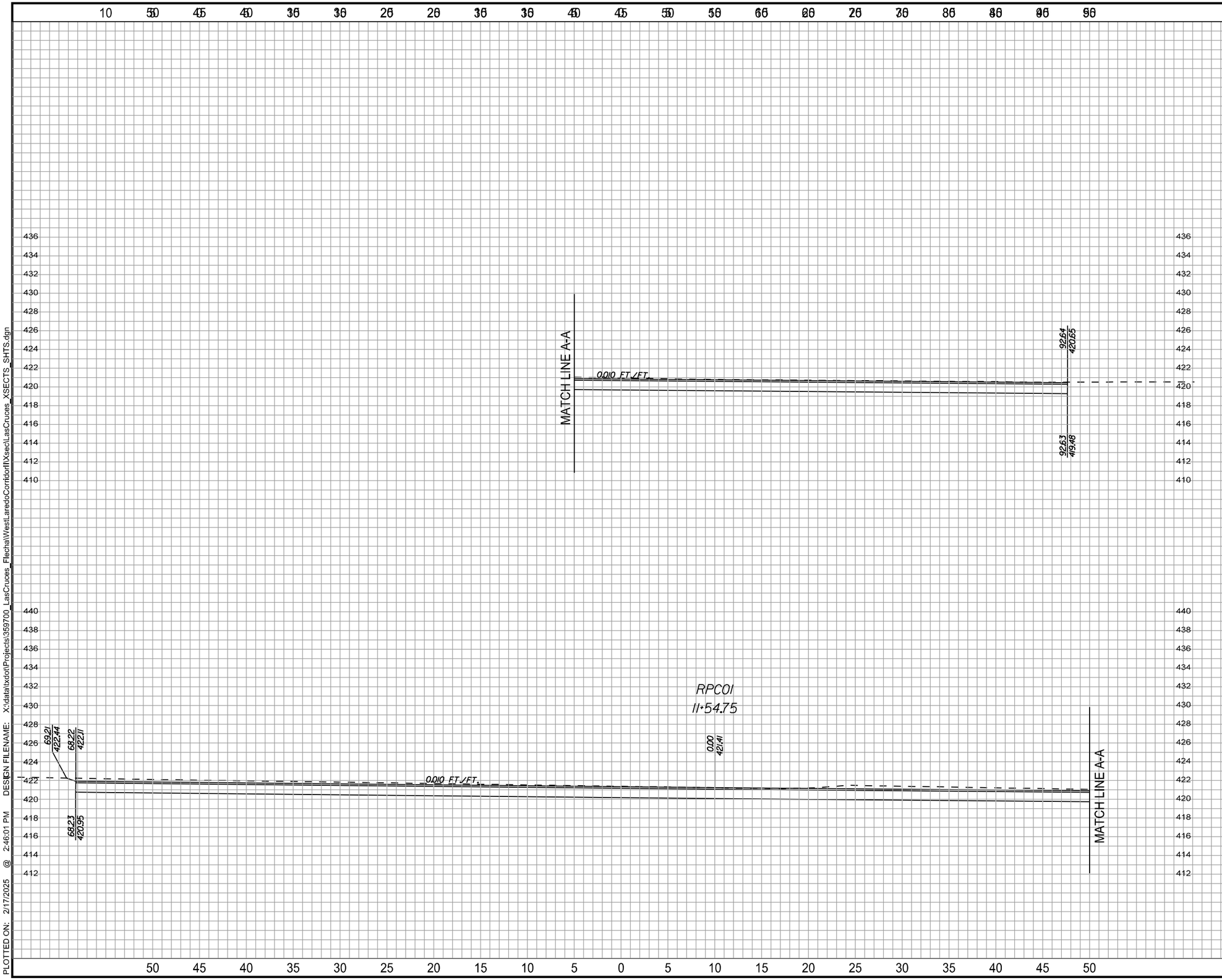

NOTES:
1. EXISTING UTILITIES ARE SHOWN AT ASSUMED DEPTHS. CONTRACTOR TO VERIFY.
2. PROPOSED STORM DRAIN LOCATIONS AND DEPTHS BASED ON STORM DRAIN LAYOUTS INCLUDED IN THE PLAN SET.

GRAPHIC SCALE
(IN FEET)
30 15 0 5 10 15
1" = 10'

LAS CRUCES REALIGNMENT

LAS CRUCES
ROADWAY CROSS SECTIONS

SHEET 1 OF 13

KCI TECHNOLOGIES, INC.
2806 W. BITTERS RD. - SUITE 218
SAN ANTONIO, TX 78248 - 210.641.9999
TEXAS REGISTERED ENGINEERING FIRM
TBPE FIRM No. F-10573
www.kci.com

© 2024 Texas Department of Transportation

FED.RD. DIV.NO.	FEDERAL AID PROJECT NO.		SHEET NO.
6	DMO 2012 (628)		168
STATE	DIST.	COUNTY	
TEXAS	LRD	WEBB	
CONT.	SECT.	JOB	HIGHWAY NO.
0922	33	076	CS

PLOTTED ON: 2/17/2025 @ 2:46:01 PM DESIGN FILENAME: X:\data\txdot\Projects\359700_LasCruces_FlechaWestLaredoCorridor\Xsec\LasCruces_XSECTS_SHTS.dgn

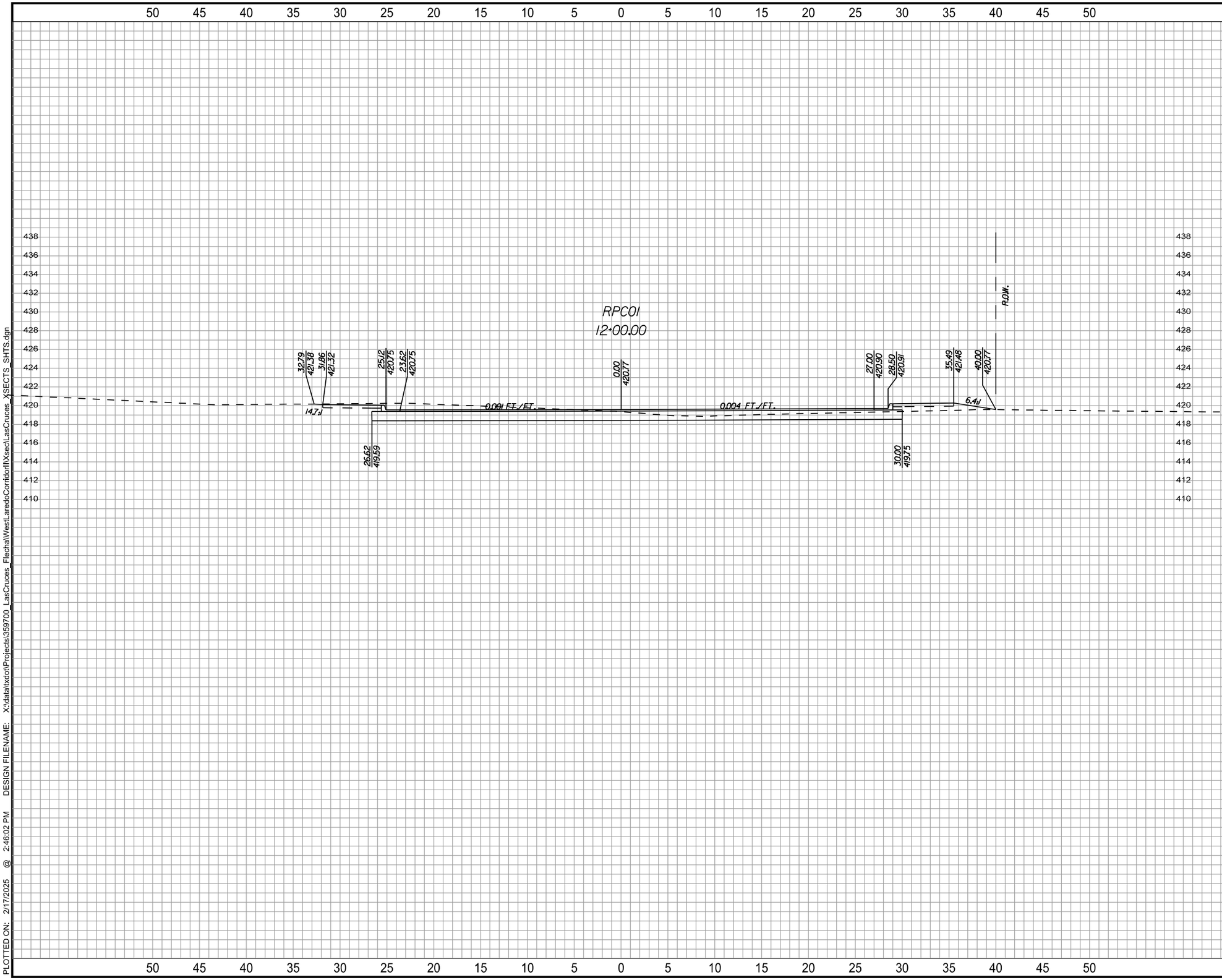

NOTES:
1. EXISTING UTILITIES ARE SHOWN AT ASSUMED DEPTHS. CONTRACTOR TO VERIFY.
2. PROPOSED STORM DRAIN LOCATIONS AND DEPTHS BASED ON STORM DRAIN LAYOUTS INCLUDED IN THE PLAN SET.

GRAPHIC SCALE
(IN FEET)
30 15 0 5 10 15
1" = 10'

LAS CRUCES REALIGNMENT

LAS CRUCES
ROADWAY CROSS SECTIONS

SHEET 2 OF 13

KCI TECHNOLOGIES, INC.
2806 W. BITTERS RD. - SUITE 218
SAN ANTONIO, TX 78248 - 210.641.9999
TEXAS REGISTERED ENGINEERING FIRM
TBPE FIRM No. F-10573
www.kci.com

© 2024 Texas Department of Transportation

FED.RD. DIV.NO.	FEDERAL AID PROJECT NO.	SHEET NO.
6	DMO 2012 (628)	169

STATE	DIST.	COUNTY
TEXAS	LRD	WEBB

CONT.	SECT.	JOB	HIGHWAY NO.
0922	33	076	CS

PLOTTED ON: 2/17/2025 @ 2:46:02 PM DESIGN FILENAME: X:\data\xdot\Projects\359700_LasCruces_Flecha\WestLaredoCorridor\Xsec\LasCruces_XSECTS_SHTS.dgn

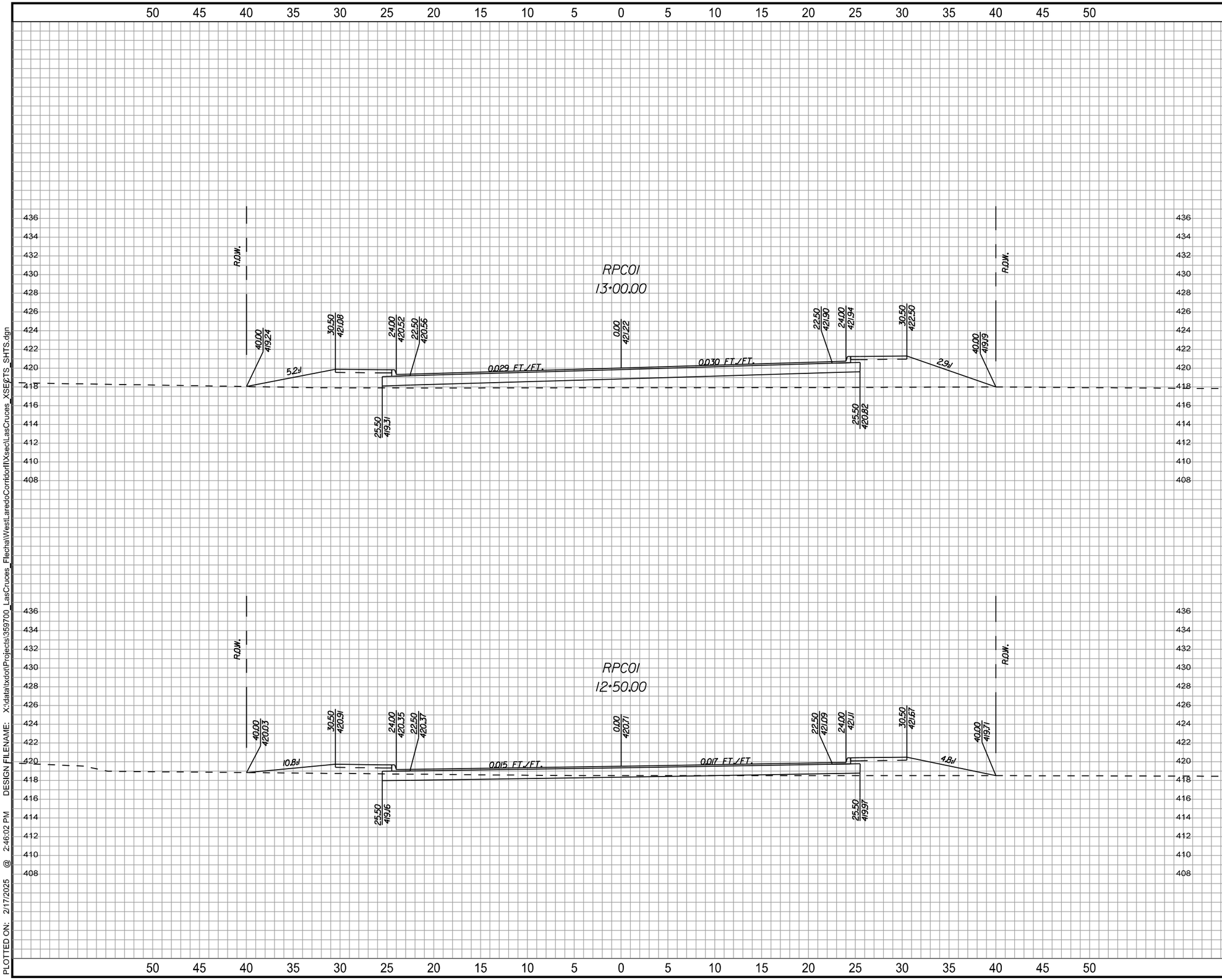

NOTES:
1. EXISTING UTILITIES ARE SHOWN AT ASSUMED DEPTHS. CONTRACTOR TO VERIFY.
2. PROPOSED STORM DRAIN LOCATIONS AND DEPTHS BASED ON STORM DRAIN LAYOUTS INCLUDED IN THE PLAN SET.

GRAPHIC SCALE
(IN FEET)
30 15 0 5 10 15
1" = 10'

LAS CRUCES REALIGNMENT

LAS CRUCES
ROADWAY CROSS SECTIONS

SHEET 3 OF 13

KCI TECHNOLOGIES, INC.
2806 W. BITTERS RD. - SUITE 218
SAN ANTONIO, TX 78248 - 210.641.9999
TEXAS REGISTERED ENGINEERING FIRM
TBPE FIRM No. F-10573
www.kci.com

© 2024 Texas Department of Transportation

FED.RD. DIV.NO.	FEDERAL AID PROJECT NO.		SHEET NO.
6	DMO 2012 (628)		170
STATE	DIST.	COUNTY	
TEXAS	LRD	WEBB	
CONT.	SECT.	JOB	HIGHWAY NO.
0922	33	076	CS

PLOTTED ON: 2/17/2025 @ 2:46:02 PM DESIGN FILENAME: X:\data\xdot\Projects\359700_LasCruces_FlechaWestLaredoCorridor\IX\sec\LasCruces_XSEC\TS_SHTS.dgn

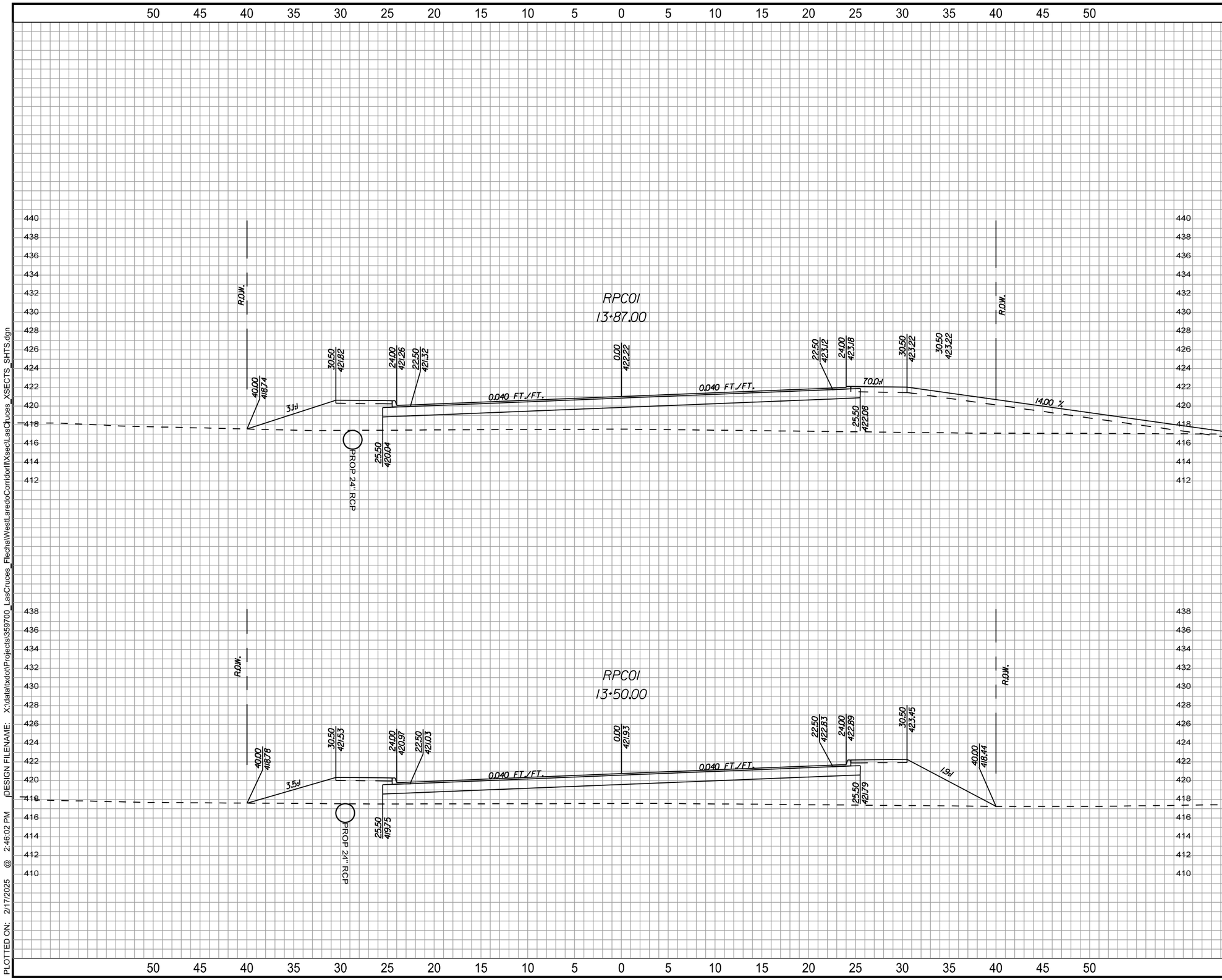

NOTES:
1. EXISTING UTILITIES ARE SHOWN AT ASSUMED DEPTHS. CONTRACTOR TO VERIFY.
2. PROPOSED STORM DRAIN LOCATIONS AND DEPTHS BASED ON STORM DRAIN LAYOUTS INCLUDED IN THE PLAN SET.

GRAPHIC SCALE
(IN FEET)
30 15 0 5 10 15
1" = 10'

LAS CRUCES REALIGNMENT

LAS CRUCES
ROADWAY CROSS SECTIONS

SHEET 4 OF 13

KCI TECHNOLOGIES, INC.
2806 W. BITTERS RD. - SUITE 218
SAN ANTONIO, TX 78248 - 210.641.9999
TEXAS REGISTERED ENGINEERING FIRM
TBPE FIRM No. F-10573
www.kci.com

© 2024
Texas Department of Transportation

FED.RD. DIV.NO.	FEDERAL AID PROJECT NO.		SHEET NO.
6	DMO 2012 (628)		171
STATE	DIST.	COUNTY	
TEXAS	LRD	WEBB	
CONT.	SECT.	JOB	HIGHWAY NO.
0922	33	076	CS

PLOTTED ON: 2/17/2025 @ 2:46:02 PM DESIGN FILENAME: X:\data\txdot\Projects\359700_LasCruces_Flecha\WestLaredoCorridor\IX\sect\LasCruces_XSECTS_SHTS.dgn

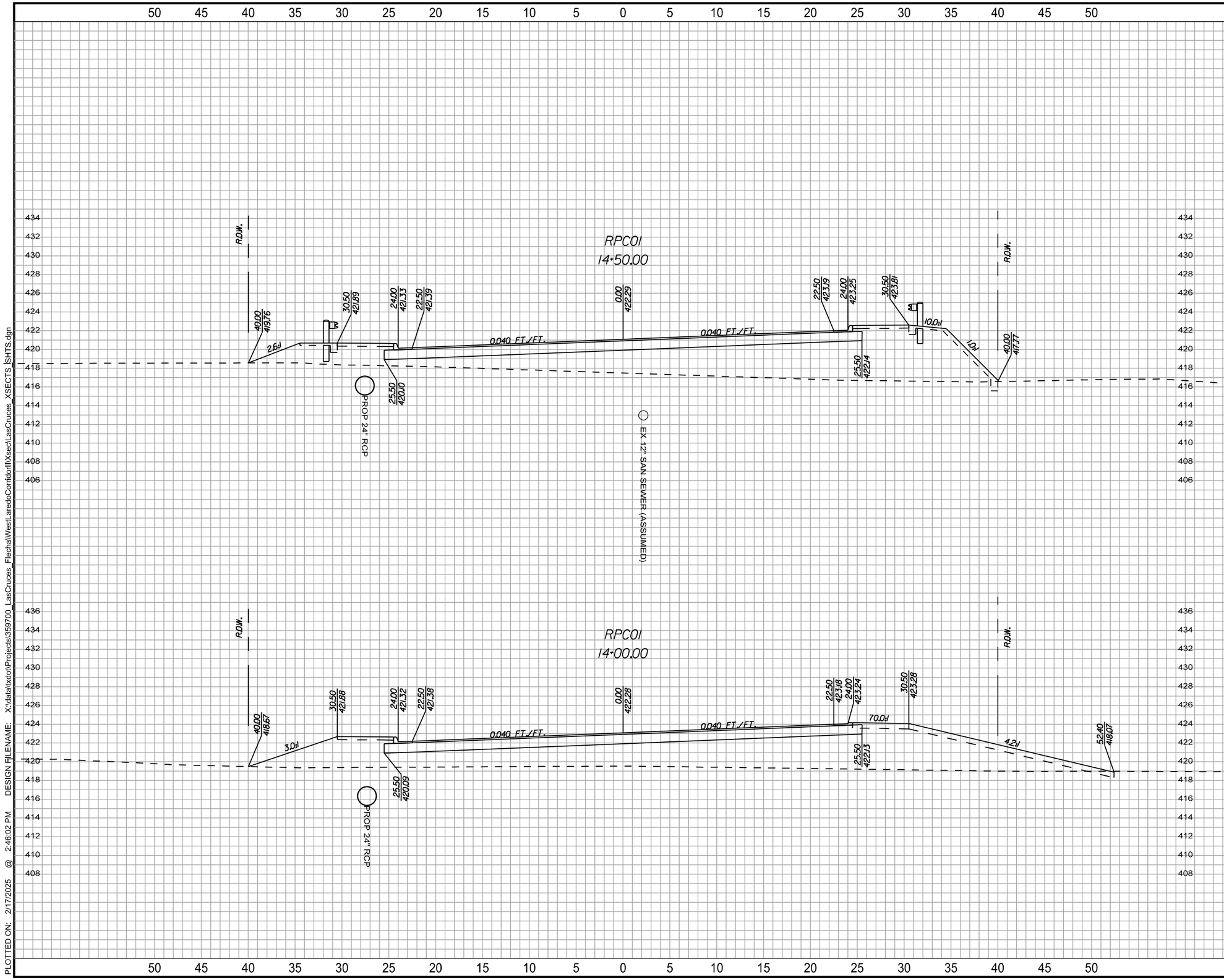

NOTES:
1. EXISTING UTILITIES ARE SHOWN AT ASSUMED DEPTHS. CONTRACTOR TO VERIFY.
2. PROPOSED STORM DRAIN LOCATIONS AND DEPTHS BASED ON STORM DRAIN LAYOUTS INCLUDED IN THE PLAN SET.

GRAPHIC SCALE
(IN FEET)
30 15 0 5 10 15
1" = 10'

LAS CRUCES REALIGNMENT

LAS CRUCES
ROADWAY CROSS SECTIONS

SHEET 5 OF 13

KCI TECHNOLOGIES, INC.
2806 W. BITTERS RD. - SUITE 218
SAN ANTONIO, TX 78248 - 210.641.9999
TEXAS REGISTERED ENGINEERING FIRM
TBPE FIRM No. F-10573
www.kci.com

© 2024 Texas Department of Transportation

FED.RD. DIV.NO.	FEDERAL AID PROJECT NO.		SHEET NO.
6	DMO 2012 (628)		172
STATE	DIST.	COUNTY	
TEXAS	LRD	WEBB	
CONT.	SECT.	JOB	HIGHWAY NO.
0922	33	076	CS

PLOTTED ON: 2/17/2025 @ 2:46:02 PM DESIGN FILENAME: X:\data\xdot\Projects\359700_LasCruces_FlechaWestLaredoCorridor\Xsec\LasCruces_XSECTS_SHTS.dgn

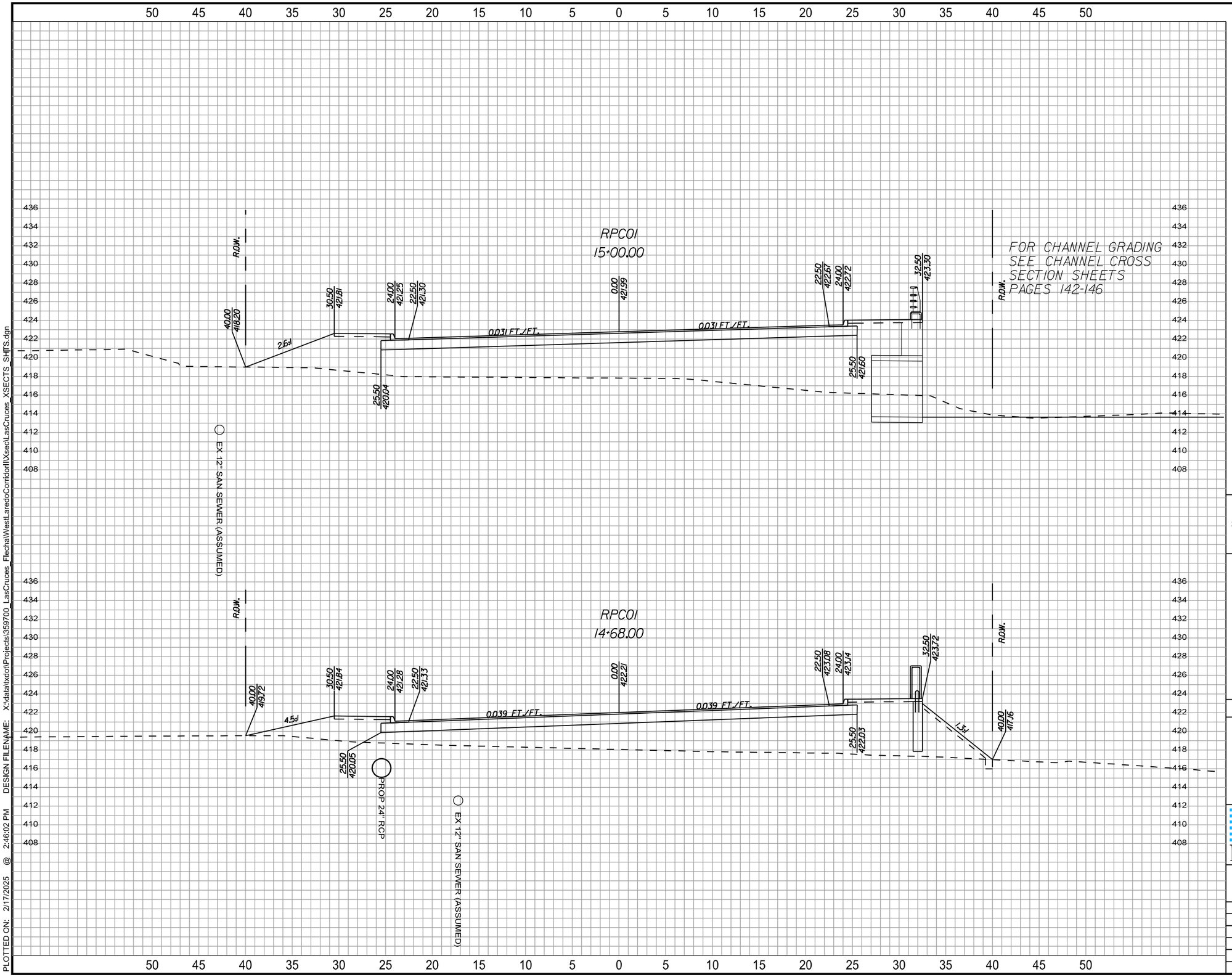

NOTES:
1. EXISTING UTILITIES ARE SHOWN AT ASSUMED DEPTHS. CONTRACTOR TO VERIFY.
2. PROPOSED STORM DRAIN LOCATIONS AND DEPTHS BASED ON STORM DRAIN LAYOUTS INCLUDED IN THE PLAN SET.

GRAPHIC SCALE
(IN FEET)
30 15 0 5 10 15
1" = 10'

LAS CRUCES REALIGNMENT

LAS CRUCES
ROADWAY CROSS SECTIONS

SHEET 6 OF 13

KCI TECHNOLOGIES, INC.
2806 W. BITTERS RD. - SUITE 218
SAN ANTONIO, TX 78248 - 210.641.9999
TEXAS REGISTERED ENGINEERING FIRM
TBPE FIRM No. F-10573
www.kci.com

© 2024 Texas Department of Transportation

FED.RD. DIV.NO.	FEDERAL AID PROJECT NO.		SHEET NO.
6	DMO 2012 (628)		173
STATE	DIST.	COUNTY	
TEXAS	LRD	WEBB	
CONT.	SECT.	JOB	HIGHWAY NO.
0922	33	076	CS

PLOTTED ON: 2/17/2025 @ 2:46:02 PM DESIGN FILENAME: X:\data1\xdot\Projects\359700_LasCruces_Flecha\WestLaredoCorridor11\XsectLasCruces_XSECTS_SHTS.dgn

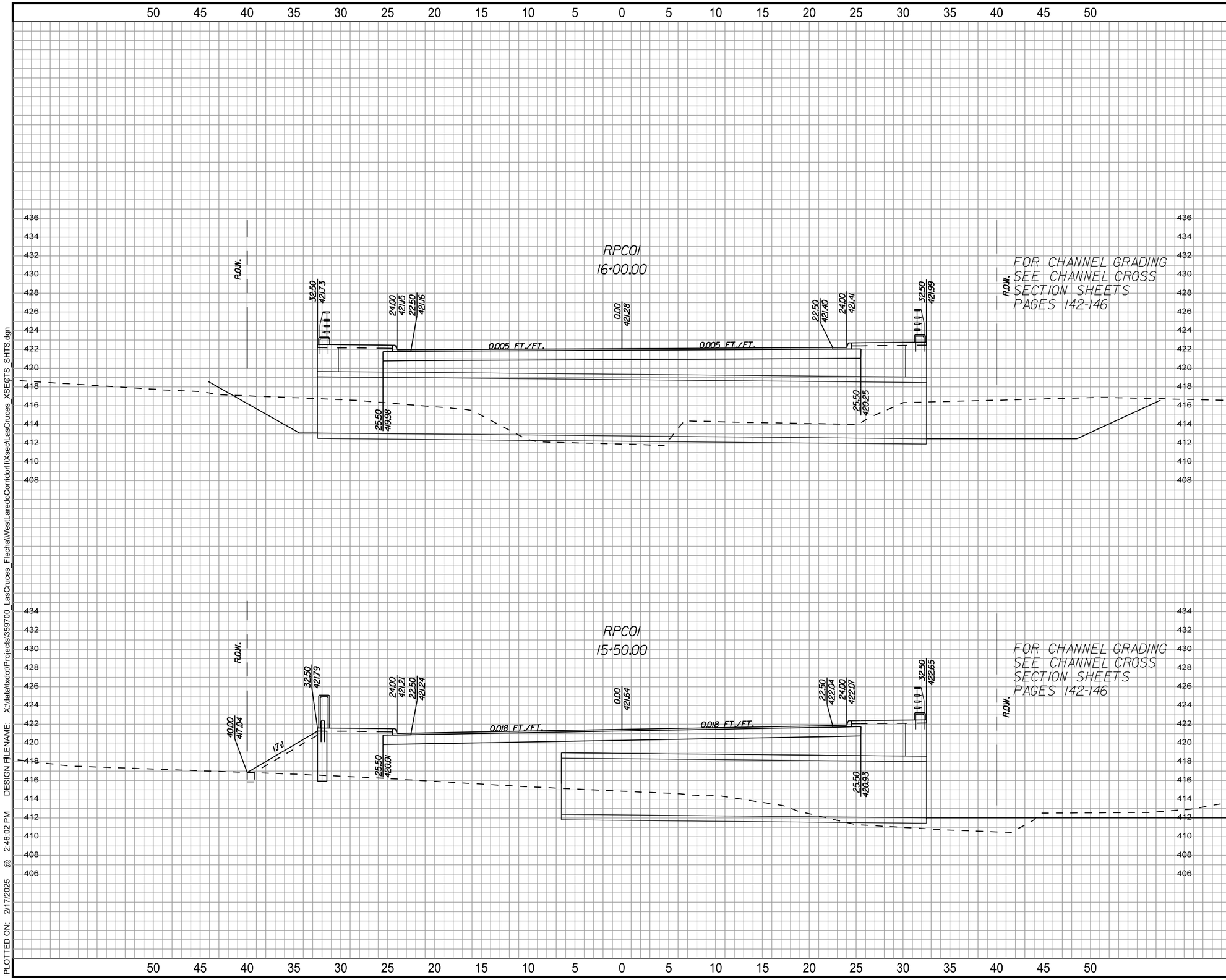

NOTES:
1. EXISTING UTILITIES ARE SHOWN AT ASSUMED DEPTHS. CONTRACTOR TO VERIFY.
2. PROPOSED STORM DRAIN LOCATIONS AND DEPTHS BASED ON STORM DRAIN LAYOUTS INCLUDED IN THE PLAN SET.

GRAPHIC SCALE
(IN FEET)
30 15 0 5 10 15
1" = 10'

LAS CRUCES REALIGNMENT

LAS CRUCES
ROADWAY CROSS SECTIONS

SHEET 7 OF 13

KCI TECHNOLOGIES, INC.
2806 W. BITTERS RD. - SUITE 218
SAN ANTONIO, TX 78248 - 210.641.9999
TEXAS REGISTERED ENGINEERING FIRM
TBPE FIRM No. F-10573
www.kci.com

© 2024 Texas Department of Transportation

FED.RD. DIV.NO.	FEDERAL AID PROJECT NO.		SHEET NO.
6	DMO 2012 (628)		174
STATE	DIST.	COUNTY	
TEXAS	LRD	WEBB	
CONT.	SECT.	JOB	HIGHWAY NO.
0922	33	076	CS

PLOTTED ON: 2/17/2025 @ 2:46:02 PM DESIGN FILENAME: X:\data\txdot\Projects\359700_LasCruces_Flecha\WestLaredoCorridor\IX\sec\LasCruces_XSEQTS_SHTS.dgn

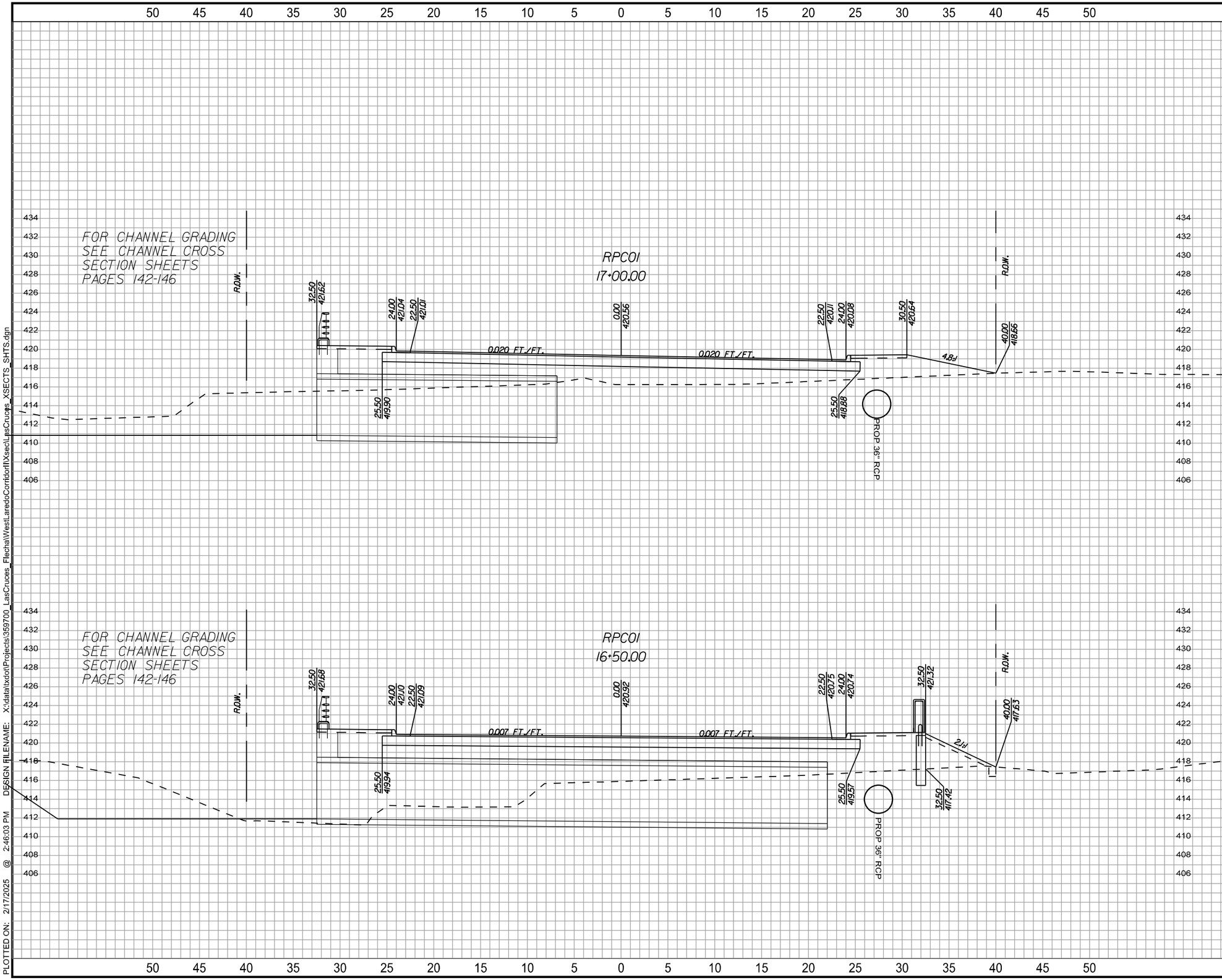

NOTES:
1. EXISTING UTILITIES ARE SHOWN AT ASSUMED DEPTHS. CONTRACTOR TO VERIFY.
2. PROPOSED STORM DRAIN LOCATIONS AND DEPTHS BASED ON STORM DRAIN LAYOUTS INCLUDED IN THE PLAN SET.

GRAPHIC SCALE
(IN FEET)
30 15 0 5 10 15
1" = 10'

LAS CRUCES REALIGNMENT

LAS CRUCES
ROADWAY CROSS SECTIONS

SHEET 8 OF 13

KCI TECHNOLOGIES, INC.
2806 W. BITTERS RD. - SUITE 218
SAN ANTONIO, TX 78248 - 210.641.9999
TEXAS REGISTERED ENGINEERING FIRM
TBPE FIRM No. F-10573
www.kci.com

© 2024 Texas Department of Transportation

FED.RD. DIV.NO.	FEDERAL AID PROJECT NO.		SHEET NO.
6	DMO 2012 (628)		175
STATE	DIST.	COUNTY	
TEXAS	LRD	WEBB	
CONT.	SECT.	JOB	HIGHWAY NO.
0922	33	076	CS

PLOTTED ON: 2/17/2025 @ 2:46:03 PM DESIGN FILENAME: X:\data\xdot\Projects\359700_LasCruces_FlechaWestLaredoCorridor\Xsect\LasCruces_XSECTS_SHTS.dgn

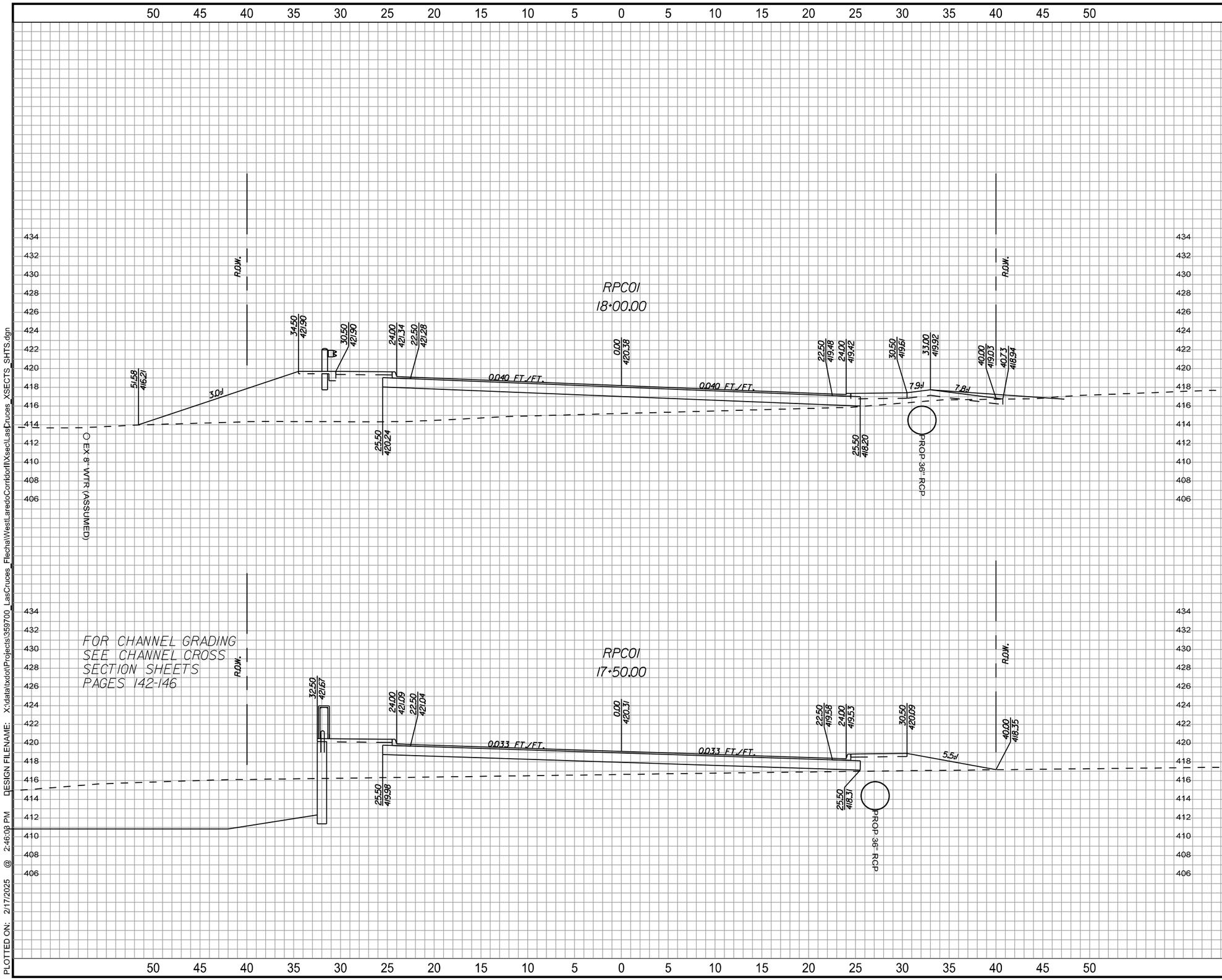

NOTES:
1. EXISTING UTILITIES ARE SHOWN AT ASSUMED DEPTHS. CONTRACTOR TO VERIFY.
2. PROPOSED STORM DRAIN LOCATIONS AND DEPTHS BASED ON STORM DRAIN LAYOUTS INCLUDED IN THE PLAN SET.

GRAPHIC SCALE
(IN FEET)
30 15 0 5 10 15
1" = 10'

LAS CRUCES REALIGNMENT

LAS CRUCES
ROADWAY CROSS SECTIONS

SHEET 9 OF 13

KCI TECHNOLOGIES, INC.
2806 W. BITTERS RD. - SUITE 218
SAN ANTONIO, TX 78248 - 210.641.9999
TEXAS REGISTERED ENGINEERING FIRM
TBPE FIRM No. F-10573
www.kci.com

© 2024 Texas Department of Transportation

FED.RD. DIV.NO.	FEDERAL AID PROJECT NO.		SHEET NO.
6	DMO 2012 (628)		176
STATE	DIST.	COUNTY	
TEXAS	LRD	WEBB	
CONT.	SECT.	JOB	HIGHWAY NO.
0922	33	076	CS

PLOTTED ON: 2/17/2025 @ 2:46:08 PM DESIGN FILENAME: X:\data\xdot\Projects\359700_LasCruces_FlechaWestLaredoCorridor\IXsec\LasCruces_XSECTS_SHTS.dgn

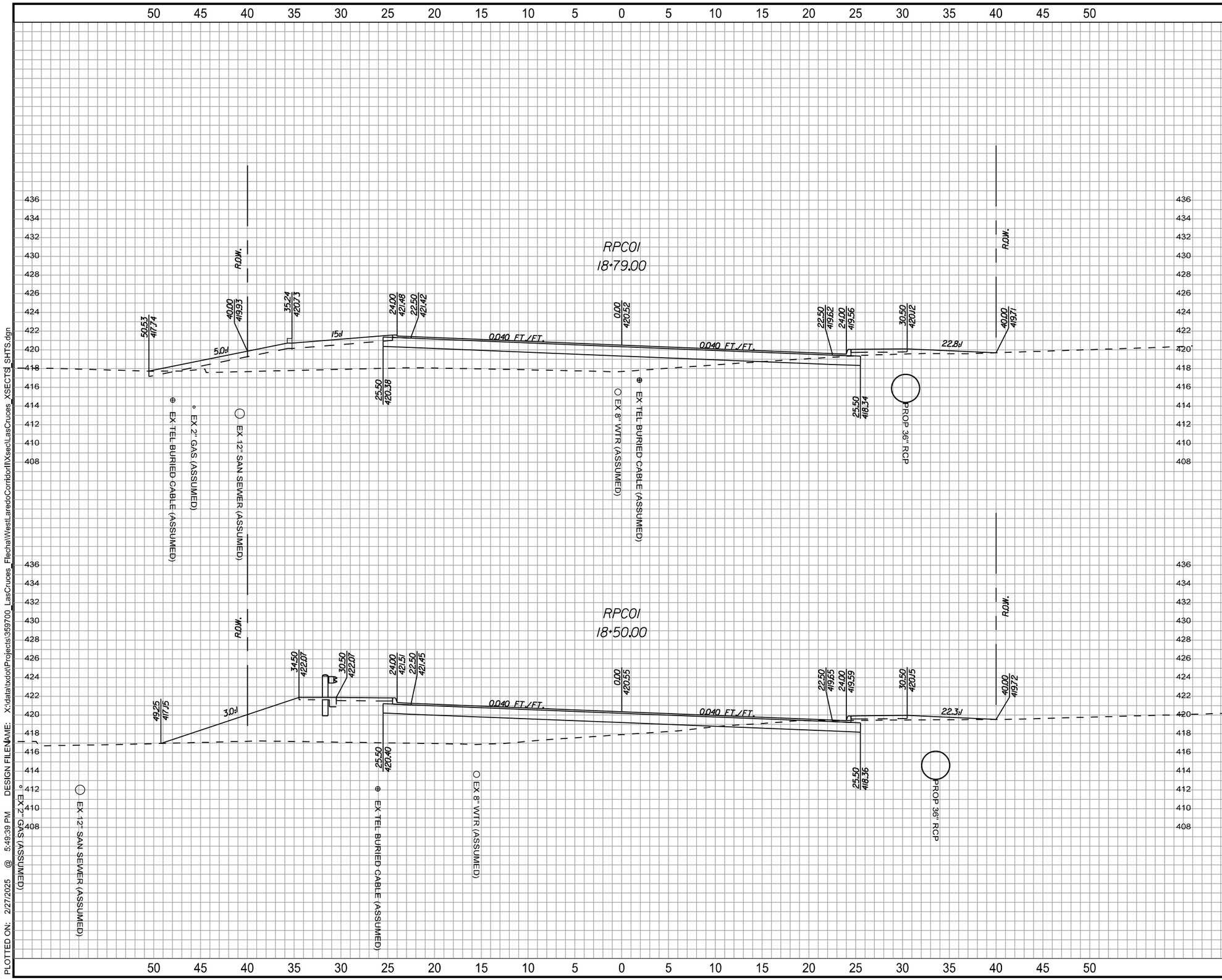

NOTES:
1. EXISTING UTILITIES ARE SHOWN AT ASSUMED DEPTHS. CONTRACTOR TO VERIFY.
2. PROPOSED STORM DRAIN LOCATIONS AND DEPTHS BASED ON STORM DRAIN LAYOUTS INCLUDED IN THE PLAN SET.

GRAPHIC SCALE
(IN FEET)
30 15 0 5 10 15
1" = 10'

LAS CRUCES REALIGNMENT

LAS CRUCES
ROADWAY CROSS SECTIONS

SHEET 10 OF 13

KCI TECHNOLOGIES, INC.
2806 W. BITTERS RD. - SUITE 218
SAN ANTONIO, TX 78248 - 210.641.9999
TEXAS REGISTERED ENGINEERING FIRM
TBPE FIRM No. F-10573
www.kci.com

© 2024

Texas Department of Transportation

FED.RD. DIV.NO.	FEDERAL AID PROJECT NO.		SHEET NO.
6	DMO 2012 (628)		177
STATE	DIST.	COUNTY	
TEXAS	LRD	WEBB	
CONT.	SECT.	JOB	HIGHWAY NO.
0922	33	076	CS

PLOTTED ON: 2/27/2025 @ 5:49:39 PM DESIGN FILENAME: X:\data\xdot\Projects\359700_LasCruces_FlechaWestLaredoCorridor\IXsect\LasCruces_XSECTS_SHTS.dgn

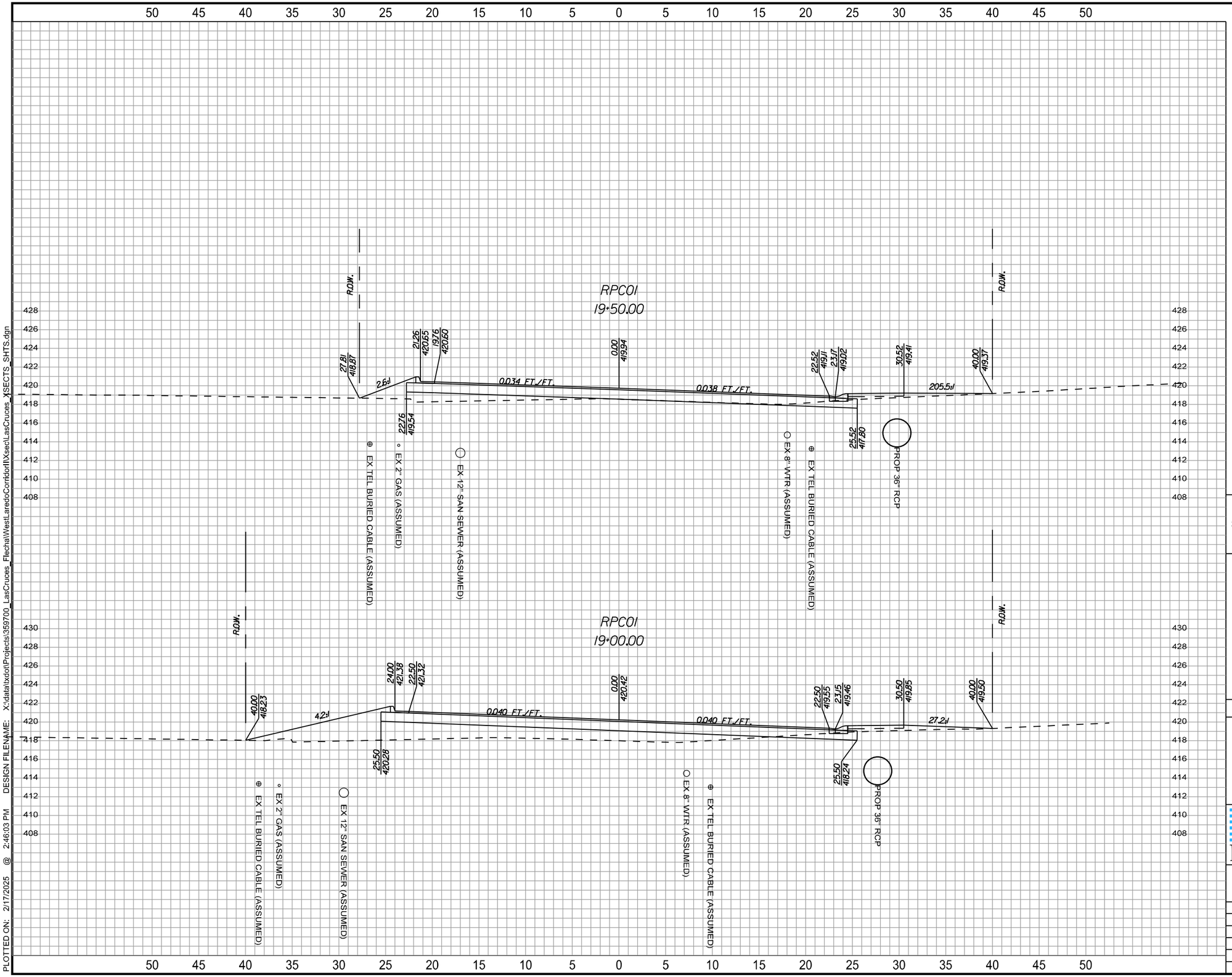

NOTES:
1. EXISTING UTILITIES ARE SHOWN AT ASSUMED DEPTHS. CONTRACTOR TO VERIFY.
2. PROPOSED STORM DRAIN LOCATIONS AND DEPTHS BASED ON STORM DRAIN LAYOUTS INCLUDED IN THE PLAN SET.

GRAPHIC SCALE
(IN FEET)
30 15 0 5 10 15
1" = 10'

LAS CRUCES REALIGNMENT

LAS CRUCES
ROADWAY CROSS SECTIONS

SHEET 11 OF 13

KCI TECHNOLOGIES, INC.
2806 W. BITTERS RD. - SUITE 218
SAN ANTONIO, TX 78248 - 210.641.9999
TEXAS REGISTERED ENGINEERING FIRM
TBPE FIRM No. F-10573
www.kci.com

© 2024 Texas Department of Transportation

FED.RD. DIV.NO.	FEDERAL AID PROJECT NO.		SHEET NO.
6	DMO 2012 (628)		178
STATE	DIST.	COUNTY	
TEXAS	LRD	WEBB	
CONT.	SECT.	JOB	HIGHWAY NO.
0922	33	076	CS

PLOTTED ON: 2/17/2025 @ 2:46:03 PM DESIGN FILENAME: X:\data\txdot\Projects\359700_LasCruces_FlechaWestLaredoCorridor\IfXsecLasCruces_XSECTS_SHTS.dgn

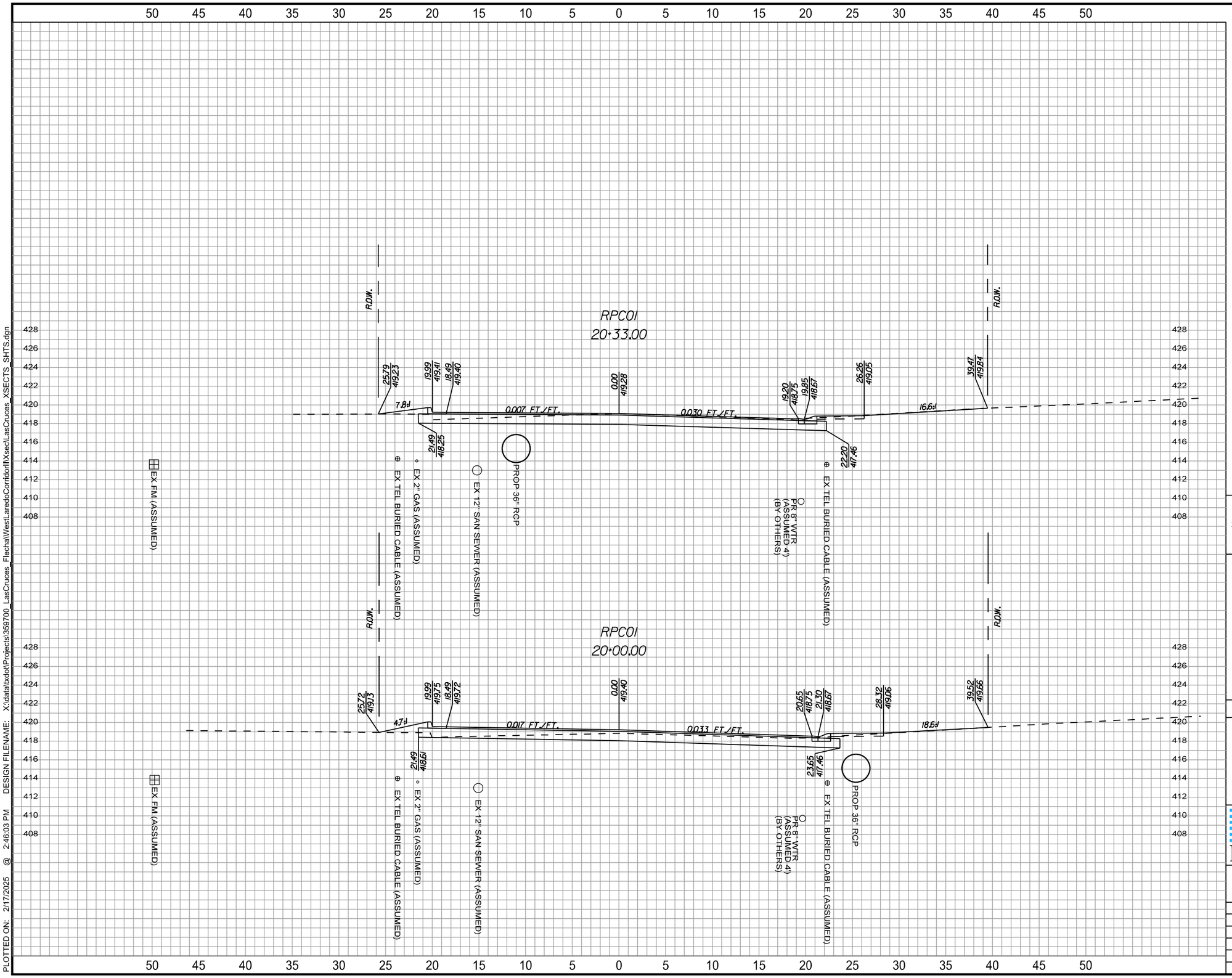

NOTES:
1. EXISTING UTILITIES ARE SHOWN AT ASSUMED DEPTHS. CONTRACTOR TO VERIFY.
2. PROPOSED STORM DRAIN LOCATIONS AND DEPTHS BASED ON STORM DRAIN LAYOUTS INCLUDED IN THE PLAN SET.

GRAPHIC SCALE
(IN FEET)
30 15 0 5 10 15
1" = 10'

LAS CRUCES REALIGNMENT

LAS CRUCES
ROADWAY CROSS SECTIONS

SHEET 12 OF 13

KCI TECHNOLOGIES, INC.
2806 W. BITTERS RD. - SUITE 218
SAN ANTONIO, TX 78248 - 210.641.9999
TEXAS REGISTERED ENGINEERING FIRM
TBPE FIRM No. F-10573
www.kci.com

© 2024 Texas Department of Transportation

FED.RD. DIV.NO.	FEDERAL AID PROJECT NO.		SHEET NO.
6	DMO 2012 (628)		179
STATE	DIST.	COUNTY	
TEXAS	LRD	WEBB	
CONT.	SECT.	JOB	HIGHWAY NO.
0922	33	076	CS

PLOTTED ON: 2/17/2025 @ 2:46:03 PM DESIGN FILENAME: X:\data\txdot\Projects\359700_LasCruces_FlechaWestLaredoCorridor\IIXsec\LasCruces_XSECTS_SHTS.dgn

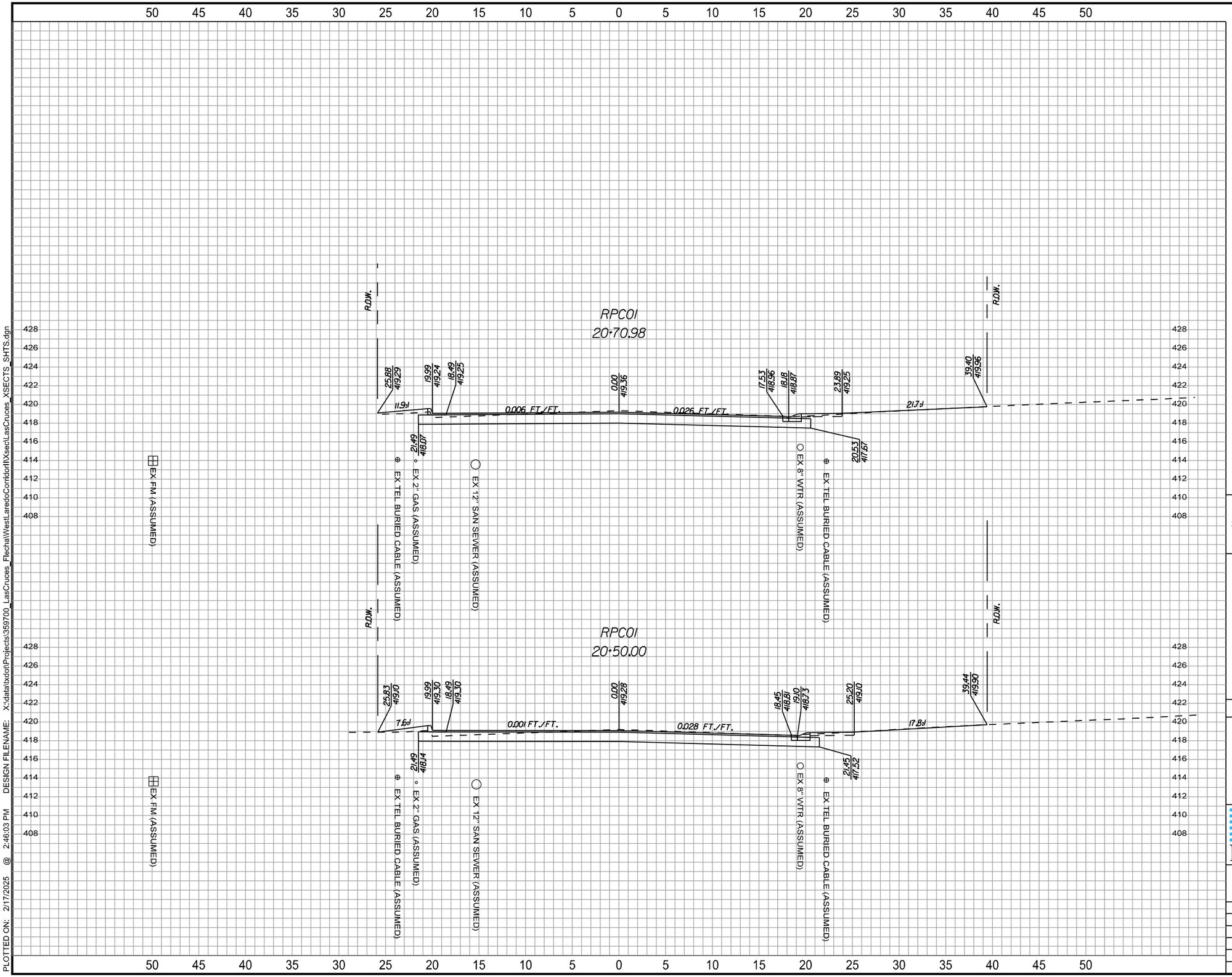

NOTES:
1. EXISTING UTILITIES ARE SHOWN AT ASSUMED DEPTHS. CONTRACTOR TO VERIFY.
2. PROPOSED STORM DRAIN LOCATIONS AND DEPTHS BASED ON STORM DRAIN LAYOUTS INCLUDED IN THE PLAN SET.

GRAPHIC SCALE
(IN FEET)
30 15 0 5 10 15
1" = 10'

LAS CRUCES REALIGNMENT

LAS CRUCES
ROADWAY CROSS SECTIONS

SHEET 13 OF 13

KCI TECHNOLOGIES, INC.
2806 W. BITTERS RD. - SUITE 218
SAN ANTONIO, TX 78248 - 210.641.9999
TEXAS REGISTERED ENGINEERING FIRM
TBPE FIRM No. F-10573
www.kci.com

© 2024 Texas Department of Transportation

FED.RD. DIV.NO.	FEDERAL AID PROJECT NO.		SHEET NO.
6	DMO 2012 (628)		180
STATE	DIST.	COUNTY	
TEXAS	LRD	WEBB	
CONT.	SECT.	JOB	HIGHWAY NO.
0922	33	076	CS

PLOTTED ON: 2/17/2025 @ 2:46:03 PM DESIGN FILENAME: X:\data\txdot\Projects\359700_LasCruces_FlechaWestLaredoCorridorII\XsecLasCruces_XSECTS_SHTS.dgn

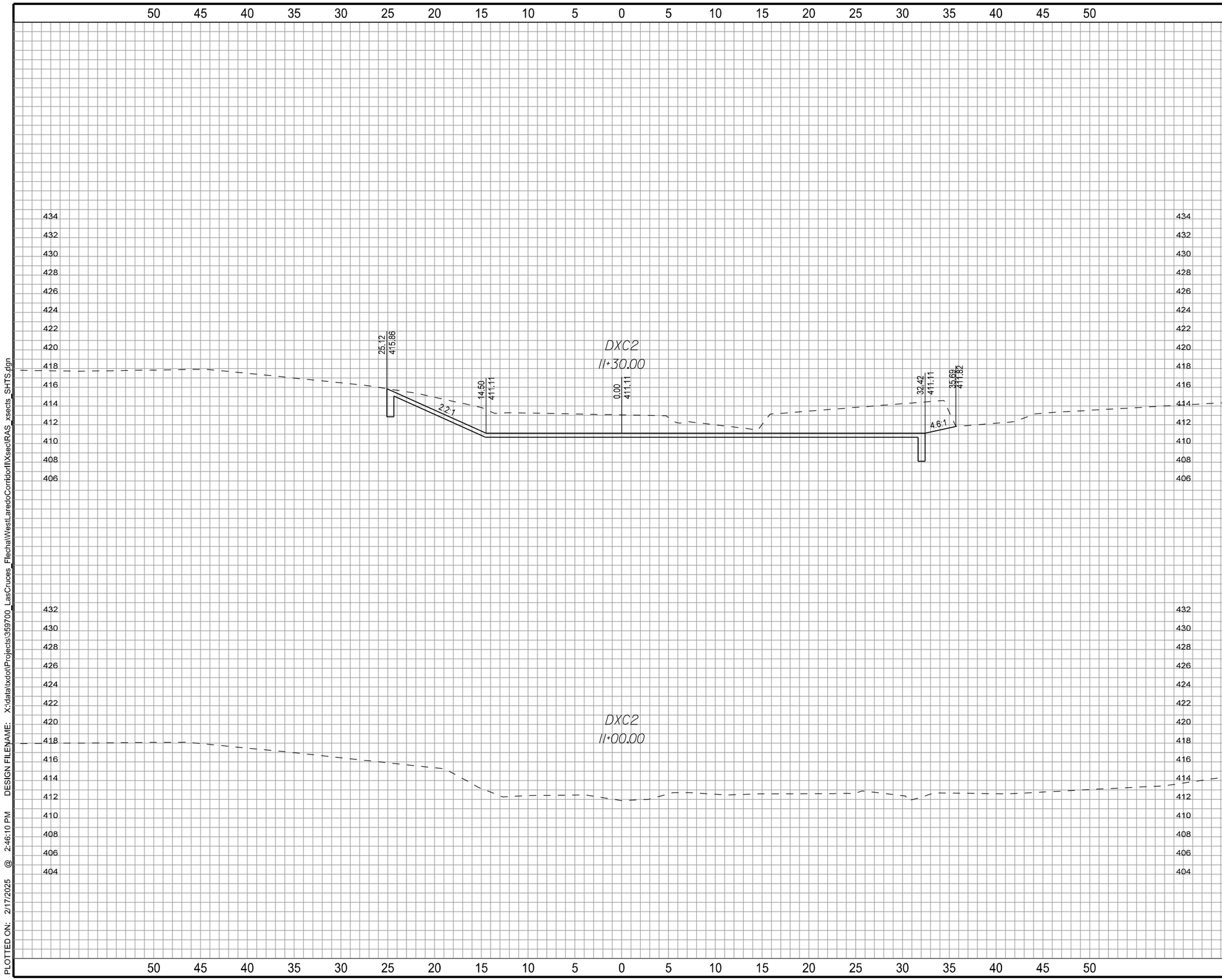

NOTES:
1. EXISTING UTILITIES ARE SHOWN AT ASSUMED DEPTHS. CONTRACTOR TO VERIFY.
2. SEE THE CHANNEL GRADING LAYOUT FOR CROSS SECTION PATTERN LINES AND ORIENTATION.

GRAPHIC SCALE
(IN FEET)
30 15 0 5 10 15
1" = 10'

LAS CRUCES REALIGNMENT

LAS CRUCES
CHANNEL CROSS SECTIONS

SHEET 1 OF 5

KCI TECHNOLOGIES, INC.
2806 W. BITTERS RD. - SUITE 218
SAN ANTONIO, TX 78248 - 210.641.9999
TEXAS REGISTERED ENGINEERING FIRM
TBPE FIRM No. F-10573
www.kci.com

© 2024 Texas Department of Transportation

FED.RD. DIV.NO.	FEDERAL AID PROJECT NO.		SHEET NO.
6	DMO 2012 (628)		181
STATE	DIST.	COUNTY	
TEXAS	LRD	WEBB	
CONT.	SECT.	JOB	HIGHWAY NO.
0922	33	076	CS

PLOTTED ON: 2/17/2025 @ 2:46:10 PM DESIGN FILENAME: X:\data\xdot\Projects\359700_LasCruces_Flecha\WestLaredoCorridor\IXsect\RAS_xsects_SHTS.dgn

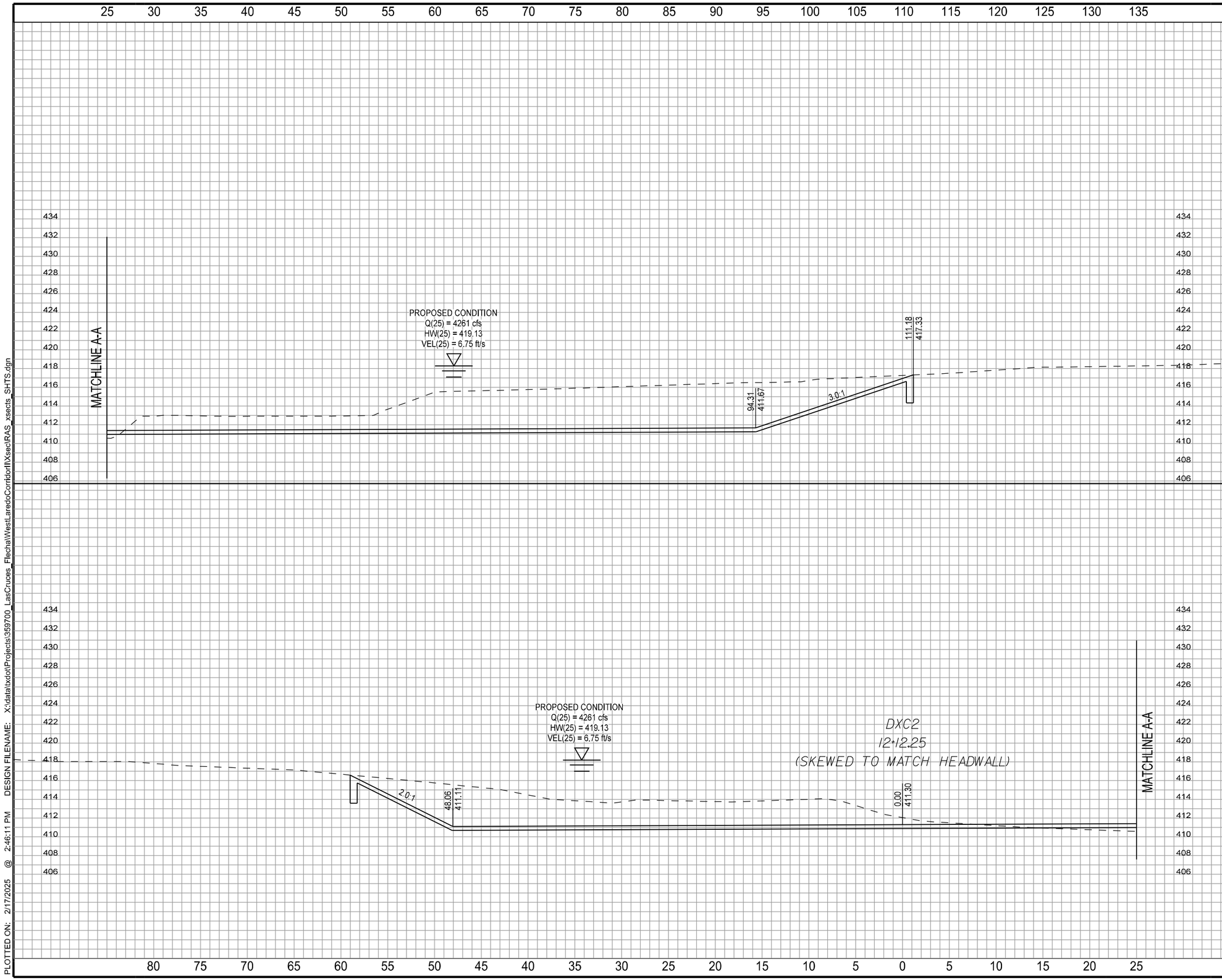

NOTES:
1. EXISTING UTILITIES ARE SHOWN AT ASSUMED DEPTHS. CONTRACTOR TO VERIFY.
2. SEE THE CHANNEL GRADING LAYOUT FOR CROSS SECTION PATTERN LINES AND ORIENTATION.

GRAPHIC SCALE
(IN FEET)
30 15 0 5 10 15
1" = 10'

LAS CRUCES REALIGNMENT

LAS CRUCES
CHANNEL CROSS SECTIONS

SHEET 2 OF 5

KCI TECHNOLOGIES, INC.
2806 W. BITTERS RD. - SUITE 218
SAN ANTONIO, TX 78248 - 210.641.9999
TEXAS REGISTERED ENGINEERING FIRM
TBPE FIRM No. F-10573
www.kci.com

© 2024 Texas Department of Transportation

FED.RD. DIV.NO.	FEDERAL AID PROJECT NO.		SHEET NO.
6	DMO 2012 (628)		182
STATE	DIST.	COUNTY	
TEXAS	LRD	WEBB	
CONT.	SECT.	JOB	HIGHWAY NO.
0922	33	076	CS

PLOTTED ON: 2/17/2025 @ 2:46:11 PM DESIGN FILENAME: X:\data\xdot\Projects\359700_LasCruces_Flecha\WestLaredoCorridor\IXsect\RAS_xsects_SHTS.dgn

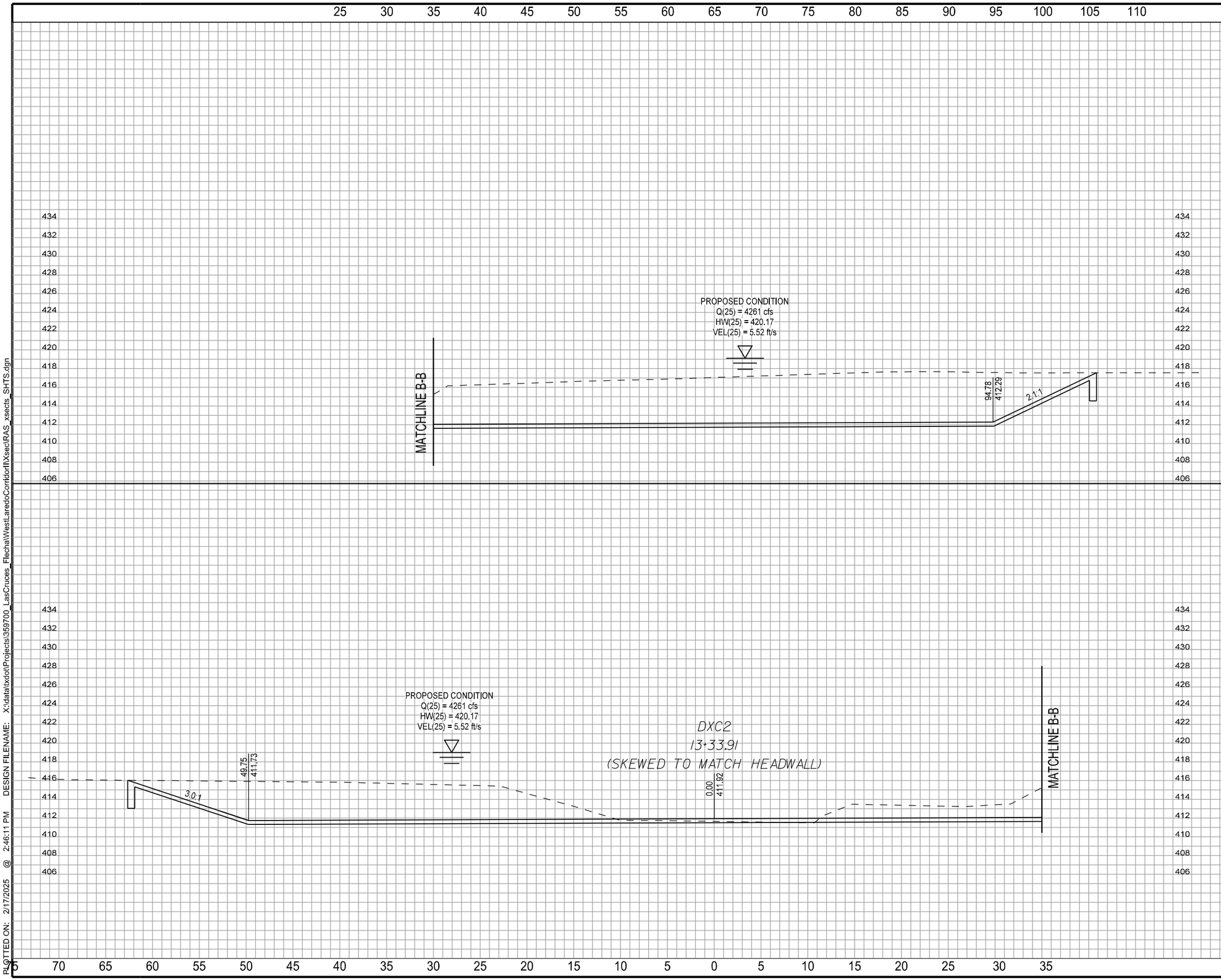

NOTES:
1. EXISTING UTILITIES ARE SHOWN AT ASSUMED DEPTHS. CONTRACTOR TO VERIFY.
2. SEE THE CHANNEL GRADING LAYOUT FOR CROSS SECTION PATTERN LINES AND ORIENTATION.

GRAPHIC SCALE
(IN FEET)
30 15 0 5 10 15
1" = 10'

LAS CRUCES REALIGNMENT

LAS CRUCES
CHANNEL CROSS SECTIONS

SHEET 3 OF 5

KCI TECHNOLOGIES, INC.
2806 W. BITTERS RD. - SUITE 218
SAN ANTONIO, TX 78248 - 210.641.9999
TEXAS REGISTERED ENGINEERING FIRM
TBPE FIRM No. F-10573
www.kci.com

© 2024 Texas Department of Transportation

FED.RD. DIV.NO.	FEDERAL AID PROJECT NO.		SHEET NO.
6	DMO 2012 (628)		183
STATE	DIST.	COUNTY	
TEXAS	LRD	WEBB	
CONT.	SECT.	JOB	HIGHWAY NO.
0922	33	076	CS

PLOTTED ON: 2/17/2025 @ 2:46:11 PM DESIGN FILENAME: X:\data\txdot\Projects\359700_LasCruces_Flecha\WestLaredoCorridor\IXsect\RAS_xsects_SHTS.dgn

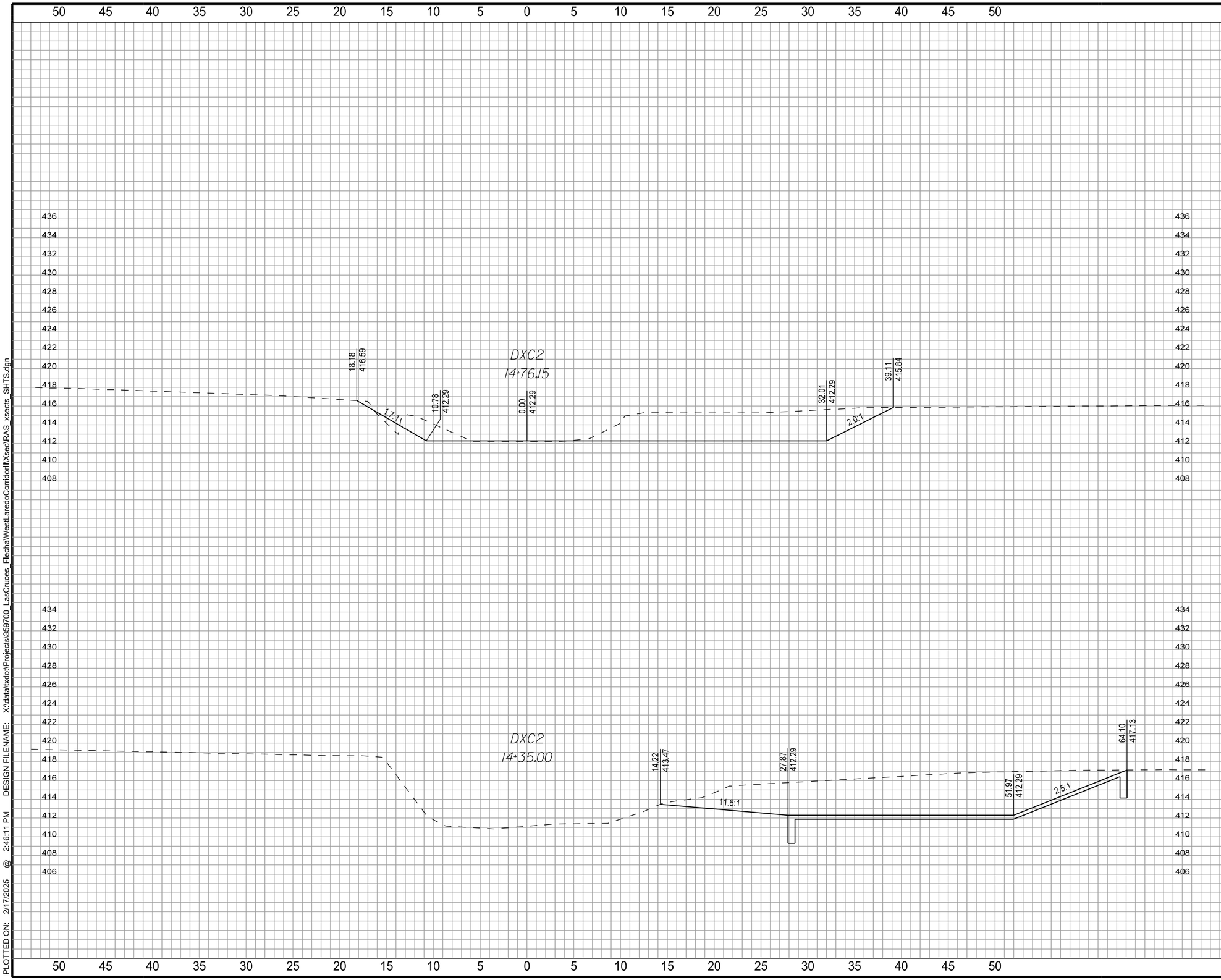

NOTES:
1. EXISTING UTILITIES ARE SHOWN AT ASSUMED DEPTHS. CONTRACTOR TO VERIFY.
2. SEE THE CHANNEL GRADING LAYOUT FOR CROSS SECTION PATTERN LINES AND ORIENTATION.

GRAPHIC SCALE
(IN FEET)
30 15 0 5 10 15
1" = 10'

LAS CRUCES REALIGNMENT

LAS CRUCES
CHANNEL CROSS SECTIONS

SHEET 4 OF 5

KCI TECHNOLOGIES, INC.
2806 W. BITTERS RD. - SUITE 218
SAN ANTONIO, TX 78248 - 210.641.9999
TEXAS REGISTERED ENGINEERING FIRM
TBPE FIRM No. F-10573
www.kci.com

© 2024 Texas Department of Transportation

FED.RD. DIV.NO.	FEDERAL AID PROJECT NO.		SHEET NO.
6	DMO 2012 (628)		184
STATE	DIST.	COUNTY	
TEXAS	LRD	WEBB	
CONT.	SECT.	JOB	HIGHWAY NO.
0922	33	076	CS

PLOTTED ON: 2/17/2025 @ 2:46:11 PM DESIGN FILENAME: X:\data\txdot\Projects\359700_LasCruces_Flecha\WestLaredoCorridor\IXsect\RAS_xsects_SHTS.dgn

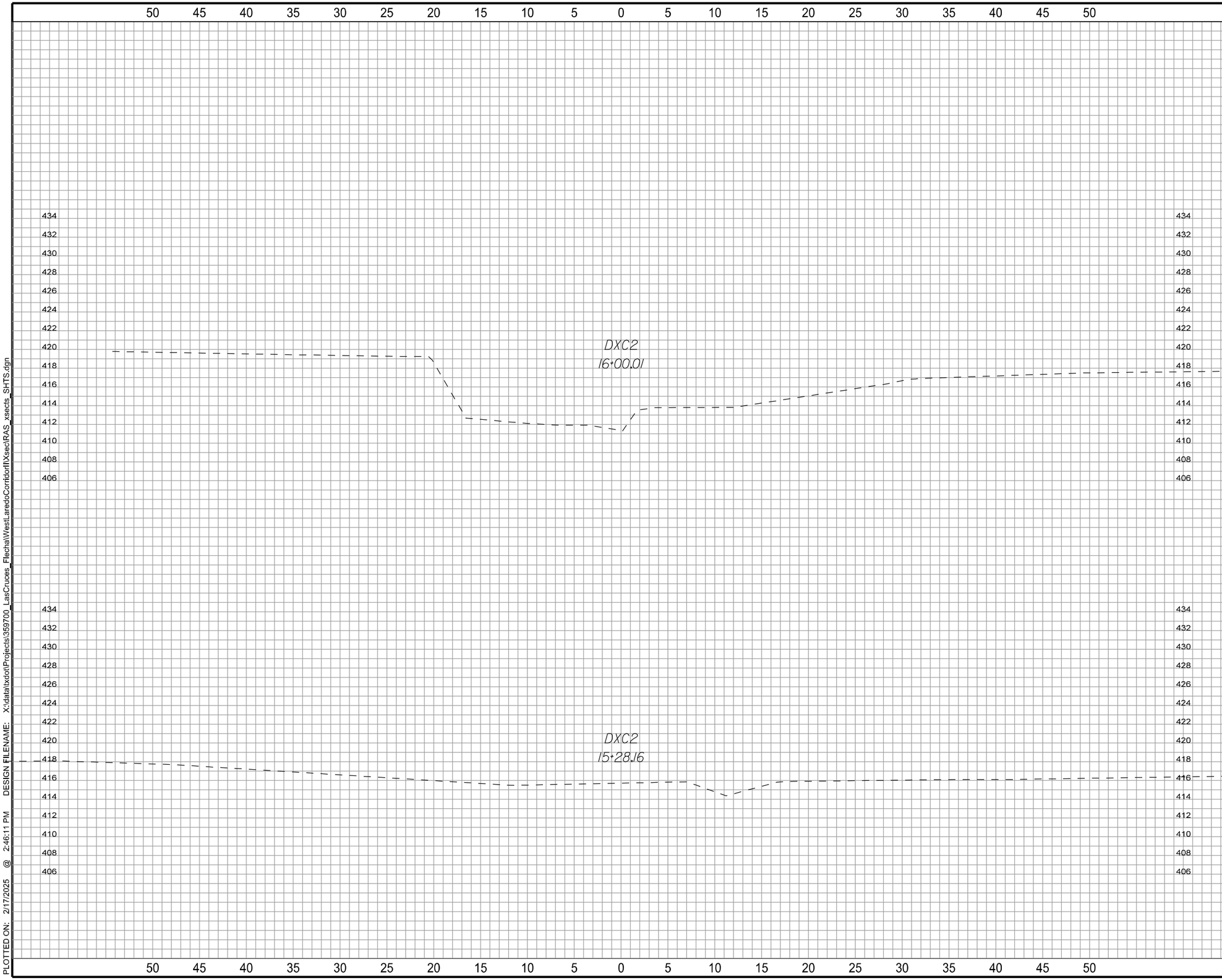

NOTES:
1. EXISTING UTILITIES ARE SHOWN AT ASSUMED DEPTHS. CONTRACTOR TO VERIFY.
2. SEE THE CHANNEL GRADING LAYOUT FOR CROSS SECTION PATTERN LINES AND ORIENTATION.

GRAPHIC SCALE
(IN FEET)
30 15 0 5 10 15
1" = 10'

LAS CRUCES REALIGNMENT

LAS CRUCES
CHANNEL CROSS SECTIONS

SHEET 5 OF 5

KCI TECHNOLOGIES, INC.
2806 W. BITTERS RD. - SUITE 218
SAN ANTONIO, TX 78248 - 210.641.9999
TEXAS REGISTERED ENGINEERING FIRM
TBPE FIRM No. F-10573
www.kci.com

© 2024 Texas Department of Transportation

FED.RD. DIV.NO.	FEDERAL AID PROJECT NO.		SHEET NO.
6	DMO 2012 (628)		185
STATE	DIST.	COUNTY	
TEXAS	LRD	WEBB	
CONT.	SECT.	JOB	HIGHWAY NO.
0922	33	076	CS

PLOTTED ON: 2/17/2025 @ 2:46:11 PM DESIGN FILENAME: X:\data\txdot\Projects\359700_LasCruces_Flecha\WestLaredoCorridor\IX\sect\RAS_xsects_SHTS.dgn

	104 01	104 02	128 01	132 01
LOCATION	8" WATER LINE (PVC C900 DR-14)	8" 45 DEGREE BEND	REMOVE/DISPOSE 8" WATER LINE (DI)	8" DI TO PVC TRANSITION COUPLING
	LF	EA	LF	EA
WATER LINE PLAN & PROFILE	95	4	95	2
TOTALS	**95**	**4**	**95**	**2**

LAS CRUCES REALIGNMENT

WATER SUMMARY

SHEET 1 OF 1

KCI TECHNOLOGIES, INC.
2806 W. BITTERS RD. - SUITE 218
SAN ANTONIO, TX 78248 - 210.641.9999
TEXAS REGISTERED ENGINEERING FIRM
TBPE FIRM No. F-10573
www.kci.com

© 2024 Texas Department of Transportation

FED.RD. DIV.NO.	FEDERAL AID PROJECT NO.		SHEET NO.
6	DMO 2012 (628)		186
STATE	DIST.	COUNTY	
TEXAS	LRD	WEBB	
CONT.	SECT.	JOB	HIGHWAY NO.
0922	33	076	CS

PLOTTED ON: 2/25/2025 @ 10:30:59 AM DESIGN FILENAME: X:\data\txdot\Projects\359700_LasCruces_Flecha\WestLaredoCorridorII\Summaries\LasCruces_WATER SUMMARY.dgn

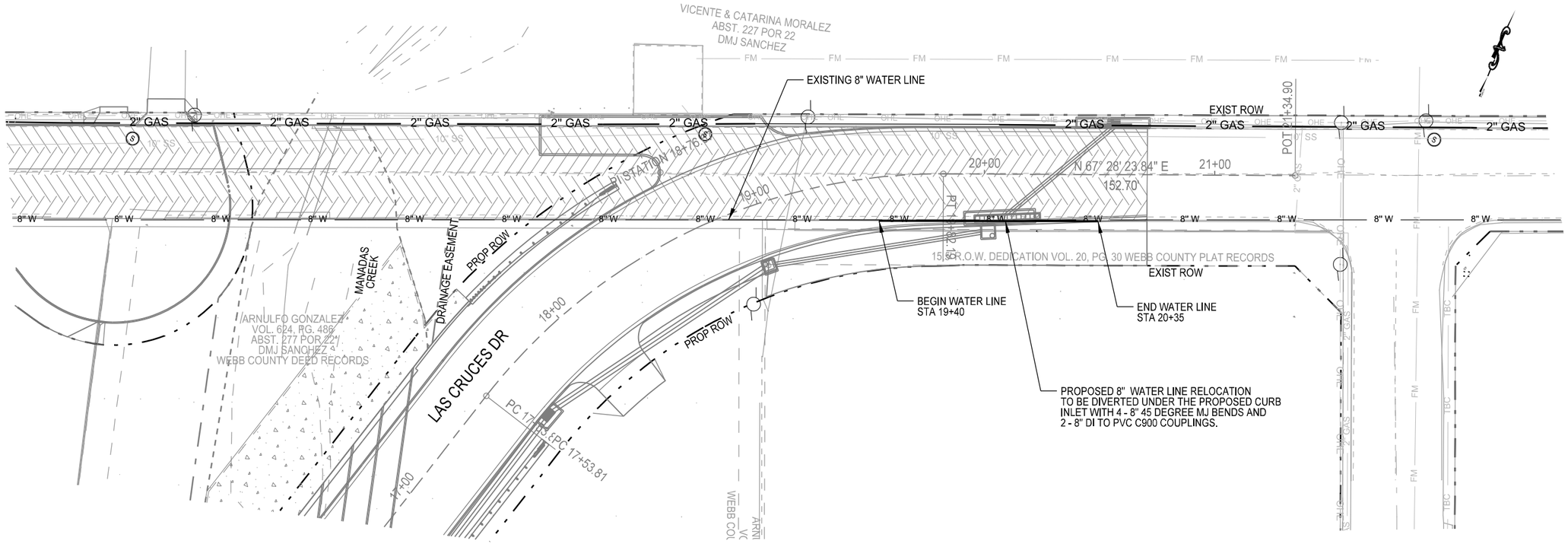

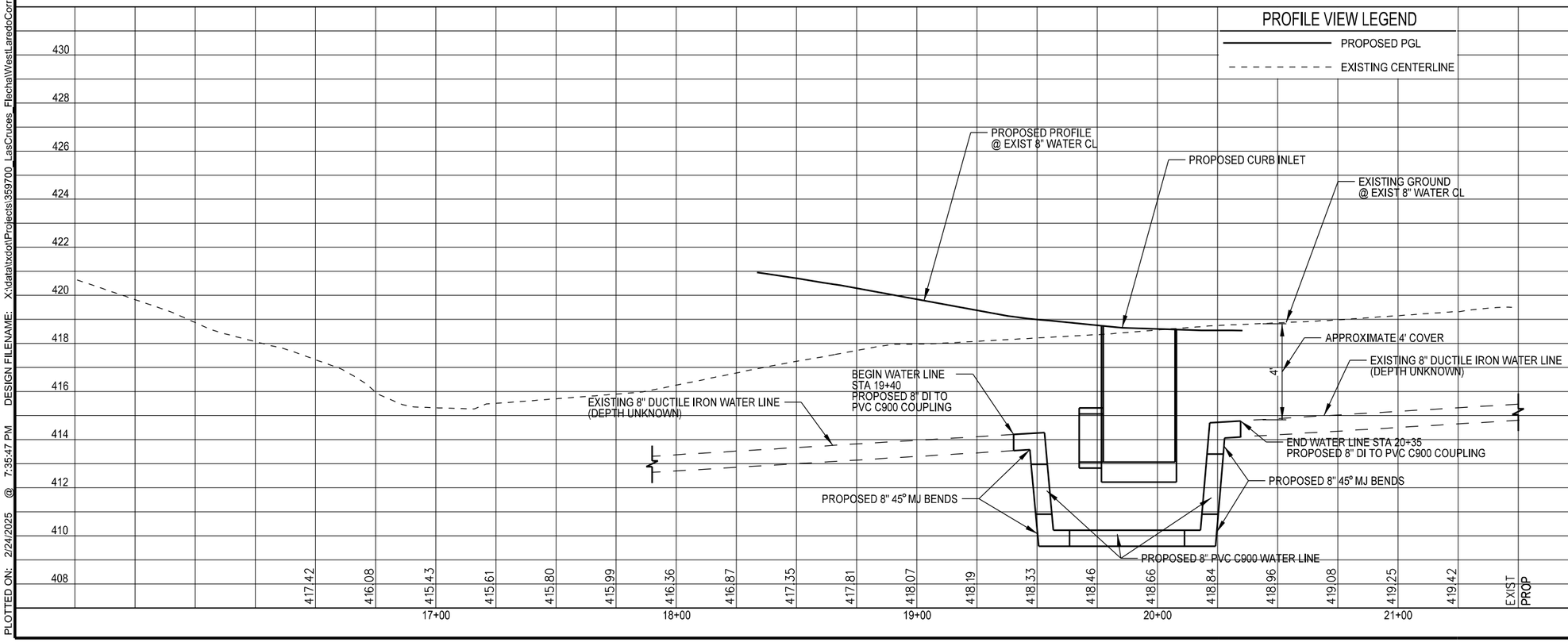

GRAPHIC SCALE
(IN FEET)
25 12.5 0 25 50 75
1" = 50'
Vert: 1" = 5'

STATE OF TEXAS
EDWARD L. OCHOA
92596
LICENSED
PROFESSIONAL ENGINEER

EDWARD L. OCHOA, P.E.
2/26/2025

LAS CRUCES REALIGNMENT

WATER LINE
PLAN & PROFILE

SHEET 1 OF 1

© 2024 Texas Department of Transportation

FED.RD. DIV.NO.	FEDERAL AID PROJECT NO.		SHEET NO.
6	DMO 2012 (628)		187
STATE	DIST.	COUNTY	
TEXAS	LRD	WEBB	
CONT.	SECT.	JOB	HIGHWAY NO.
0922	33	076	CS

PLOTTED ON: 2/24/2025 @ 7:35:47 PM DESIGN FILENAME: X:\data\txdot\Projects\359700_LasCruces_Flecha\WestLaredoCorridor\ROADWAY\LasCruces_PP_Water.dgn

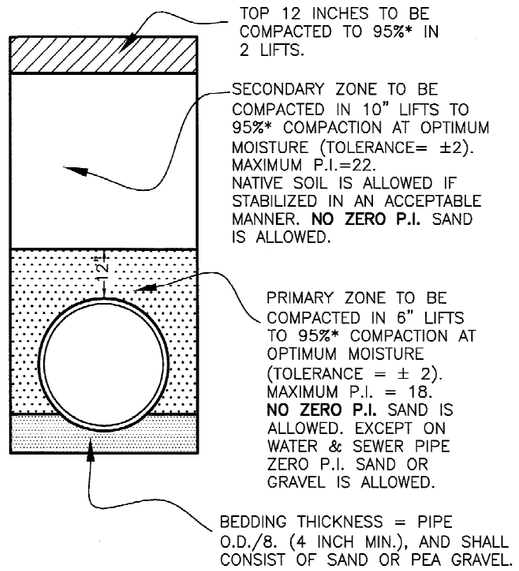

UTILITY TRENCH CONDITION "A" WITHIN PAVED AREAS

N.T.S.

SCALE	DRAWN DATE
N.T.S.	MARCH. 28, 2013
DESIGNED BY:	APPROVED BY:
DRAWN BY:	
DETAIL NO: 102-1	

DETAIL DESCRIPTION

UTILITY TRENCH BACKFILL DETAIL CONDITION "A"

REVISIONS:

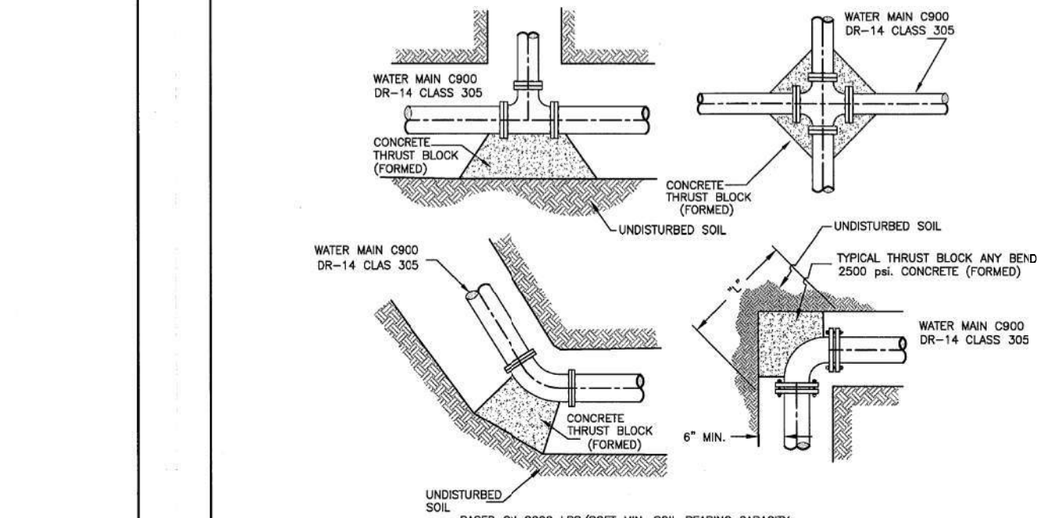

BASED ON 2000 LBS/SQFT MIN. SOIL BEARING CAPACITY

THRUST BLOCK DIMENSIONS 150 PSI TEST PRESSURE						
PIPE SIZE	L = LENGTH REQUIRED IN INCHES (SEE DETAIL)					
	T = VERTICAL SOIL BEARING THICKNESS IN INCHES					
	"TEE"	CAP	BEND			
			90°	45°	22 1/2°	11 1/4°
8"	43/12	43/12	43/12	23/12	12/12	12/12
12"	48/24	48/24	48/24	35/18	26/12	16/12

RESTRAINT LENGHT IN FEET 150 PSI TEST PRESSURE SAFETY FACTOR =2.0, SOIL TYPE= CL, 4' PIPE COVER						
PIPE SIZE	"TEE" *	CAP	HORIZONTAL BENDS			
			90°	45°	22 1/2°	11 1/4°
8"	25'	68'	25'	10'	5'	3'
12"	5' (12X8) 55' (12X12)	97'				

* RESTRAINT LENGTH ALONG THE BRANCH. ASSUMING A MINIMUM PIPE LENGTH OF 5FT ON EACH SIDE OF THE TEE RUN WITHOUT FITTINGS.

CONCRETE HORIZONTAL THRUST BLOCK & RESTRAINT LENGHTS

N.T.S

SCALE	DRAWN DATE
N.T.S.	MARCH. 28, 2013
DESIGNED BY:	APPROVED BY:
DRAWN BY:	
DETAIL NO: 104-6	

DETAIL DESCRIPTION

CONCRETE THRUST BLOCK DETAIL

REVISIONS:

STATE OF TEXAS
EDWARD L. OCHOA
92596
LICENSED
PROFESSIONAL ENGINEER

EDWARD L. OCHOA, P.E.
2/26/2025

LAS CRUCES REALIGNMENT

MISCELLANEOUS DETAILS
102-1 & 104-6

SHEET 2 OF 2

KCI TECHNOLOGIES, INC.
2806 W. BITTERS RD. - SUITE 218
SAN ANTONIO, TX 78248 - 210.641.9999
TEXAS REGISTERED ENGINEERING FIRM
TBPE FIRM No. F-10573
www.kci.com

© 2024 Texas Department of Transportation

FED.RD. DIV.NO.	FEDERAL AID PROJECT NO.		SHEET NO.
6	DMO 2012 (628)		188
STATE	DIST.	COUNTY	
TEXAS	LRD	WEBB	
CONT.	SECT.	JOB	HIGHWAY NO.
0922	33	076	CS

PLOTTED ON: 2/24/2025 @ 7:35:48 PM DESIGN FILENAME: X:\data\txdot\Projects\359700_LasCruces_FlechaWestLaredoCorridor\Standards\8_B WATER STANDARDS\LasCruces_DETAILS 102-1 & 104-6.dgn